YAMAHA 2004

XT660R(S)
XT660X(S)

5VK1-AE1

SERVICE MANUAL

http://manuals.magnamaniac.com

This manual is brought to you by:

www.magnamaniac.com

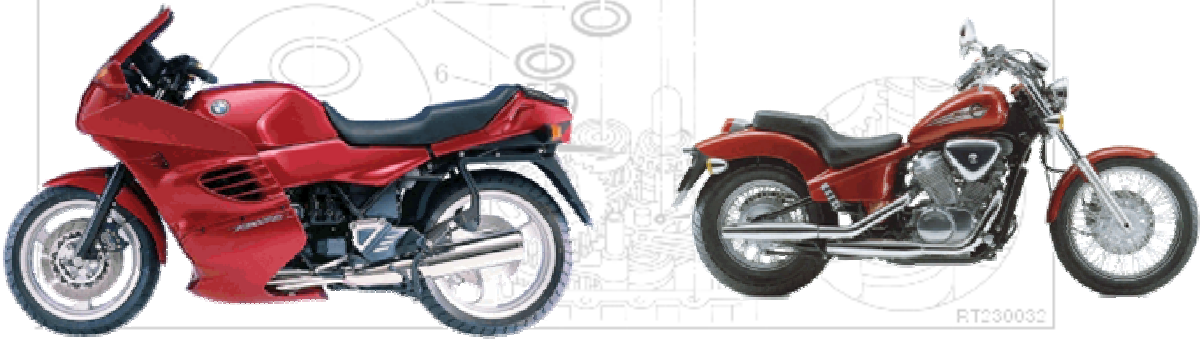

Here you can find Service Manuals for over 200 different motorcycles

http://manuals.magnamaniac.com

EAS00000

XT660R(S)/XT660X(S) 2004
SERVICE MANUAL
©2003 by MBK Industrie
First edition, December 2003
All rights reserved.
Any reproduction or unauthorized use without the written permission of MBK Industrie is expressly prohibited.

http://manuals.magnamaniac.com

EAS00002

NOTICE

This manual was produced by MBK Industrie primarily for use by Yamaha dealers and their qualified mechanics. It is not possible to include all the knowledge of a mechanic in one manual. Therefore, anyone who uses this book to perform maintenance and repairs on Yamaha vehicles should have a basic understanding of mechanics and the techniques to repair these types of vehicles. Repair and maintenance work attempted by anyone without this knowledge is likely to render the vehicle unsafe and unfit for use.

Yamaha is continually striving to improve all its models. Modifications and significant changes in specifications or procedures will be forwarded to all authorized Yamaha dealers and will appear in future editions of this manual where applicable.

NOTE:
Designs and specifications are subject to change without notice.

EAS00004

IMPORTANT MANUAL INFORMATION

Particularly important information is distinguished in this manual by the following.

⚠ — The Safety Alert Symbol means ATTENTION! BECOME ALERT! YOUR SAFETY IS INVOLVED!

⚠ WARNING — Failure to follow WARNING instructions could result in severe injury or death to the motorcycle operator, a bystander or a person checking or repairing the motorcycle.

CAUTION: — A CAUTION indicates special precautions that must be taken to avoid damage to the motorcycle.

NOTE: — A NOTE provides key information to make procedures easier or clearer.

http://manuals.magnamaniac.com

EAS00007

HOW TO USE THIS MANUAL

This manual is intended as a handy, easy-to-read reference book for the mechanic. Comprehensive explanations of all installation, removal, disassembly, assembly, repair and check procedures are laid out with the individual steps in sequential order.

① The manual is divided into chapters. An abbreviation and symbol in the upper right corner of each page indicate the current chapter.
Refer to “SYMBOLS”.

② Each chapter is divided into sections. The current section title is shown at the top of each page, except in Chapter 3 (“PERIODIC CHECKS AND ADJUSTMENTS”), where the sub-section title(s) appears.

③ Sub-section titles appear in smaller print than the section title.

④ To help identify parts and clarify procedure steps, there are exploded diagrams at the start of each removal and disassembly section.

⑤ Numbers are given in the order of the jobs in the exploded diagram. A circled number indicates a disassembly step.

⑥ Symbols indicate parts to be lubricated or replaced.
Refer to “SYMBOLS”.

⑦ A job instruction chart accompanies the exploded diagram, providing the order of jobs, names of parts, notes in jobs, etc.

⑧ Jobs requiring more information (such as special tools and technical data) are described sequentially.

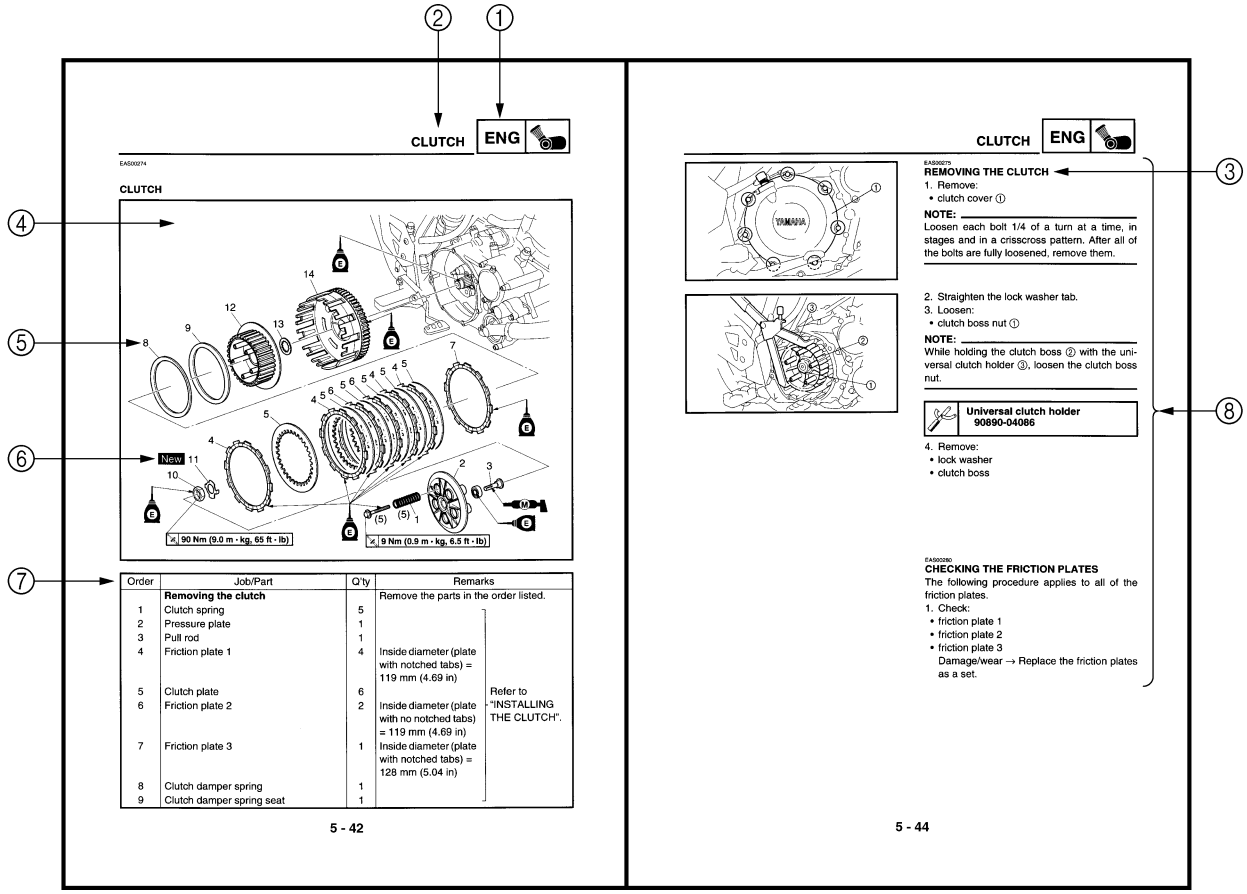

http://manuals.magnamaniac.com

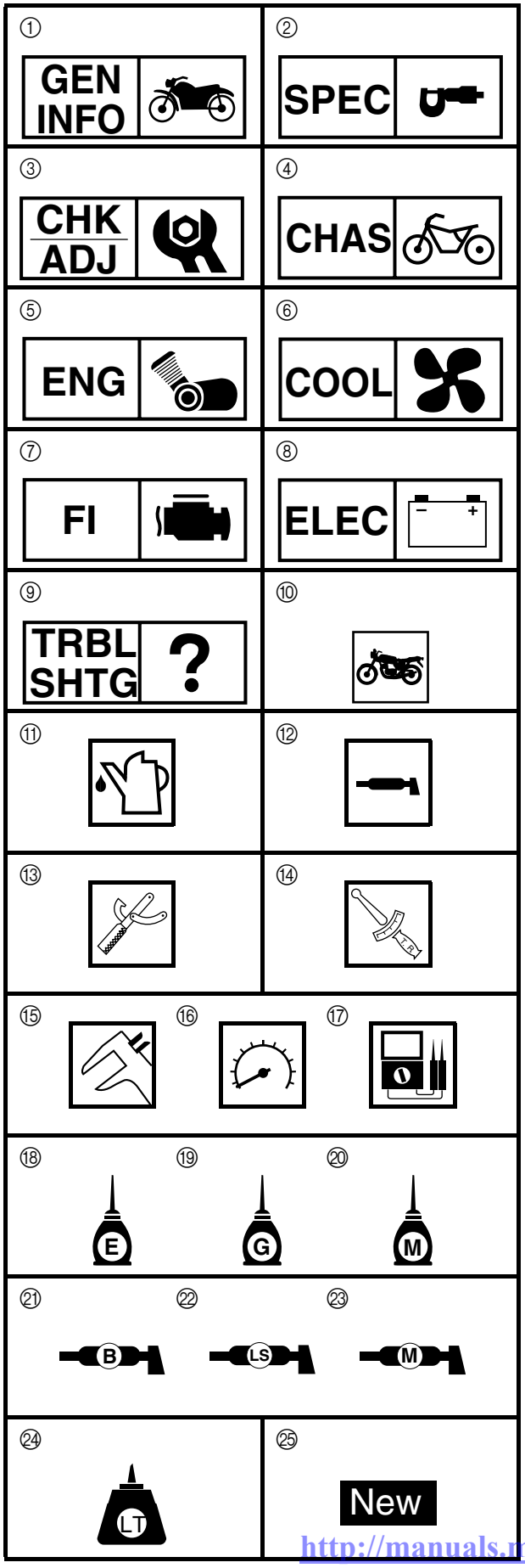

EAS00008

SYMBOLS

The following symbols are not relevant to every vehicle.

Symbols ① to ⑨ indicate the subject of each chapter.

① General information
② Specifications
③ Periodic checks and adjustments
④ Chassis
⑤ Engine
⑥ Cooling system
⑦ Fuel injection system
⑧ Electrical system
⑨ Troubleshooting

Symbols ⑩ to ⑰ indicate the following.

⑩ Serviceable with engine mounted
⑪ Filling fluid
⑫ Lubricant
⑬ Special tool
⑭ Tightening torque
⑮ Wear limit, clearance
⑯ Engine speed
⑰ Electrical data

Symbols ⑱ to ㉓ in the exploded diagrams indicate the types of lubricants and lubrication points.

⑱ Engine oil
⑲ Gear oil
⑳ Molybdenum-disulfide oil
㉑ Wheel-bearing grease
㉒ Lithium-soap-based grease
㉓ Molybdenum-disulfide grease

Symbols ㉔ to ㉕ in the exploded diagrams indicate the following.

㉔ Apply locking agent (LOCTITE®)
㉕ Replace the part

http://manuals.magnamaniac.com

EAS00010

TABLE OF CONTENTS

GENERAL INFORMATION	GEN INFO 1
SPECIFICATIONS	SPEC 2
PERIODIC CHECKS AND ADJUSTMENTS	CHK ADJ 3
CHASSIS	CHAS 4
ENGINE	ENG 5
COOLING SYSTEM	COOL 6
FUEL INJECTION SYSTEM	FI 7
ELECTRICAL SYSTEM	ELEC 8
TROUBLESHOOTING	TRBL SHTG 9

http://manuals.magnamaniac.com

http://manuals.magnamaniac.com

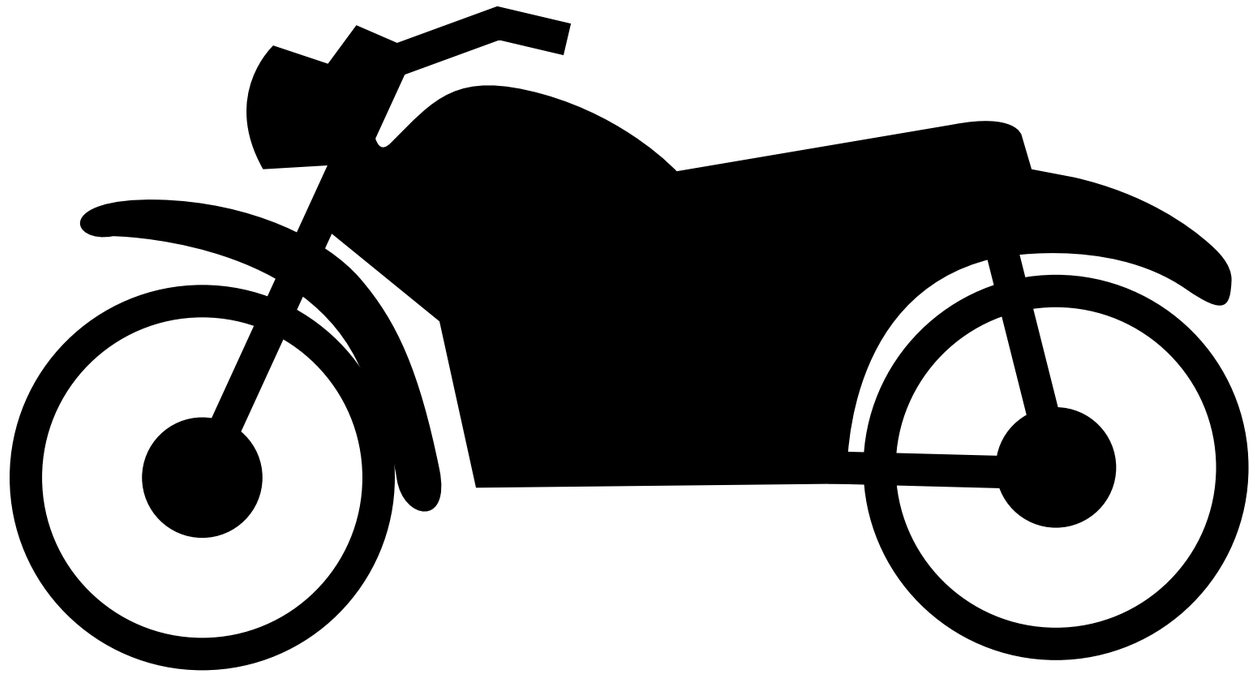

GEN INFO

1

http://manuals.magnamaniac.com

CHAPTER 1
GENERAL INFORMATION

MOTORCYCLE IDENTIFICATION 1-1
VEHICLE IDENTIFICATION NUMBER 1-1
MODEL LABEL 1-1

FEATURES 1-2
OUTLINE 1-2
FI SYSTEM 1-3

IMPORTANT INFORMATION 1-4
PREPARATION FOR REMOVAL AND DISASSEMBLY 1-4
REPLACEMENT PARTS 1-4
GASKETS, OIL SEALS AND O-RINGS 1-4
LOCK WASHERS/PLATES AND COTTER PINS 1-5
BEARINGS AND OIL SEALS 1-5
CIRCLIPS 1-5

CHECKING THE CONNECTIONS 1-6

SPECIAL TOOLS 1-7

http://manuals.magnamaniac.com

http://manuals.magnamaniac.com

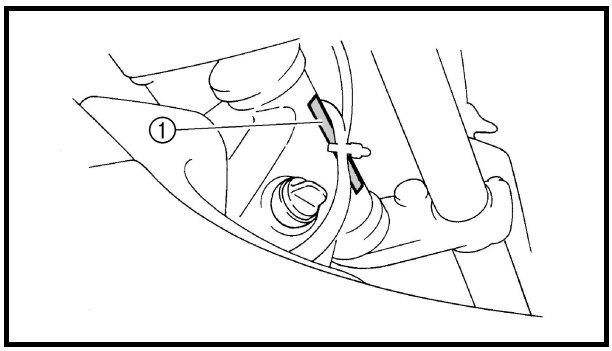

EAS00014
GENERAL INFORMATION
MOTORCYCLE IDENTIFICATION

EAS00017
VEHICLE IDENTIFICATION NUMBER
The vehicle identification number ① is stamped into the right side of the steering head pipe.

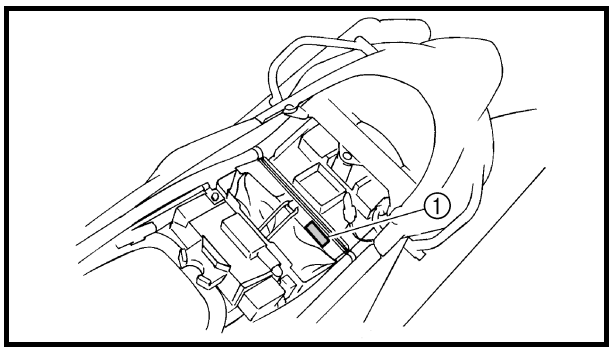

EAS00018
MODEL LABEL
The model label ① is affixed to the frame. This information will be needed to order spare parts.

http://manuals.magnamaniac.com

EAS00019
FEATURES

EAS00896
OUTLINE

The main function of a fuel supply system is to provide fuel to the combustion chamber at the optimum air-fuel ratio in accordance with the engine operating conditions and the atmospheric temperature. In a conventional carburetor system, the air-fuel ratio of the mixture that is supplied to the combustion chamber is created by the volume of the intake air and the fuel that is metered by the jet used in the respective chamber.

Despite the same volume of intake air, the fuel volume requirement varies with the engine operating conditions, such as acceleration, deceleration, or operation under a heavy load. Carburetors that meter the fuel through the use of jets have been provided with various auxiliary devices, so that an optimum air-fuel ratio can be achieved to accommodate the constant changes in the operating conditions of the engine.

As the requirements for engines to deliver more performance and cleaner exhaust gases increase, it becomes necessary to control the air-fuel ratio in a more precise and finely tuned manner. To accommodate this need, this model has adopted an electronically controlled fuel injection (FI) system in place of a conventional carburetor system. This system can achieve an optimum air-fuel ratio required by the engine at all times by using a microprocessor that regulates the fuel injection volume according to the engine operating conditions detected by various sensors.

Adoption of the FI system has resulted in a highly precise fuel supply, improved engine response, better fuel economy, and reduced exhaust emissions. Furthermore, the air induction system (AI system) has been placed under computer control together with the FI system in order to realize cleaner exhaust gases.

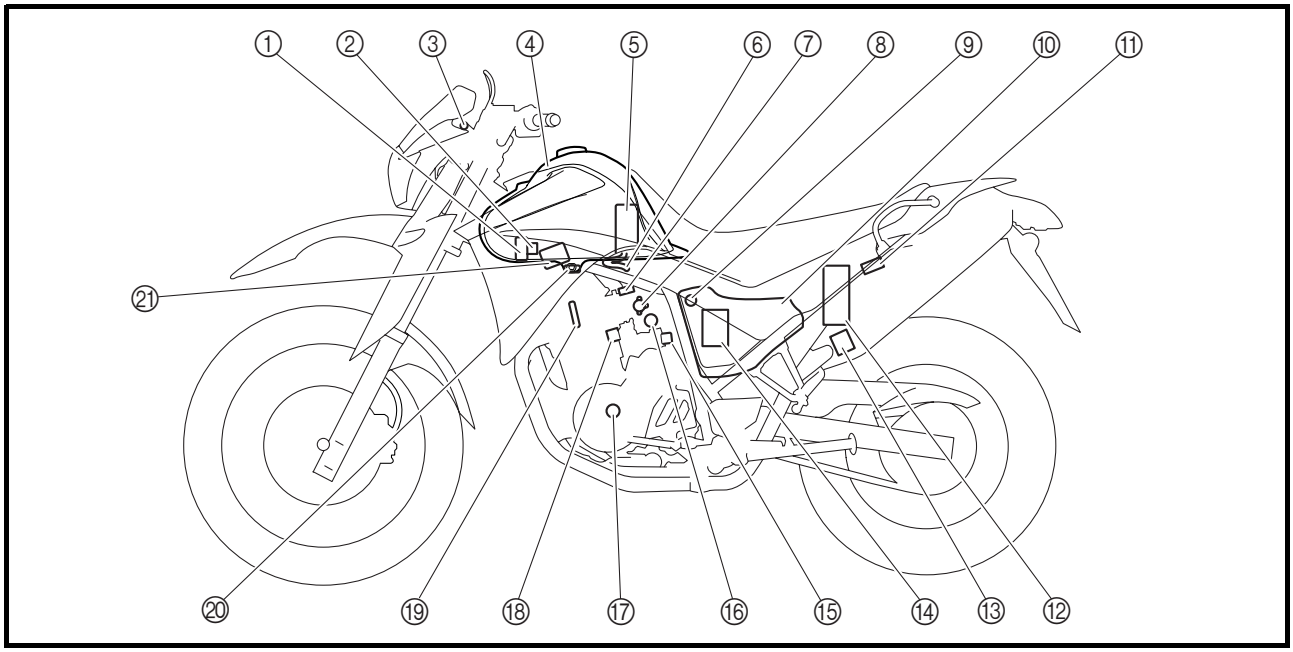

① Air cut-off valve
② Air induction system solenoid
③ Engine trouble warning light
④ Fuel tank
⑤ Fuel pump
⑥ Fuel hose
⑦ Fuel injector
⑧ Throttle position sensor
⑨ Intake air temperature sensor
⑩ Air filter case
⑪ Fuel injection system relay
⑫ Battery
⑬ Catalytic converter
⑭ ECU
⑮ Lean angle cut-off switch
⑯ Fast idle unit
⑰ Crankshaft position sensor
⑱ Coolant temperature sensor
⑲ Spark plug
⑳ Intake air pressure sensor
㉑ Ignition coil

http://manuals.magnamaniac.com

EAS00897
FI SYSTEM

The fuel pump delivers fuel to the injector via the fuel filter. The pressure regulator maintains the fuel pressure that is applied to the injector at 324 kPa (3.24 kg/cm^2, 46.1 psi) higher than the intake manifold pressure. Accordingly, when the energizing signal from the ECU energizes the injector, the fuel passage opens, causing the fuel to be injected into the intake manifold only during the time the passage remains open. Therefore, the longer the length of time the injector is energized (injection duration), the greater the volume of fuel that is supplied. Conversely, the shorter the length of time the injector is energized (injection duration), the lesser the volume of fuel that is supplied.

The injection duration and the injection timing are controlled by the ECU. Signals that are input from the throttle position sensor, crankshaft position sensor, intake air pressure sensor, intake air temperature sensor, and coolant temperature sensor enable the ECU to determine the injection duration. The injection timing is determined through the signal from the crankshaft position sensor. As a result, the volume of fuel that is required by the engine can be supplied at all times in accordance with the driving conditions.

Illustration is for reference only.

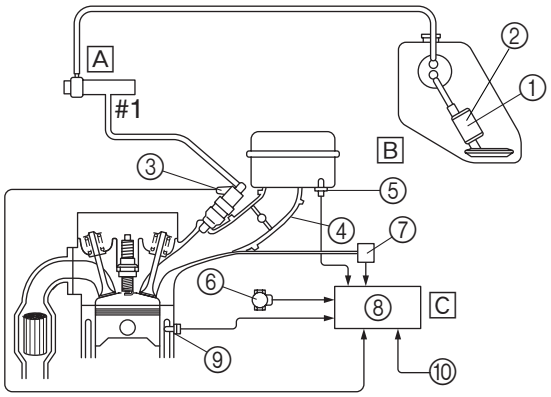

① Fuel pump
② Pressure regulator
③ Fuel injector
④ Throttle body
⑤ Intake air temperature sensor
⑥ Throttle position sensor
⑦ Intake air pressure sensor
⑧ ECU
⑨ Coolant temperature sensor
⑩ Crankshaft position sensor
A Fuel system
B Air system
C Control system

http://manuals.magnamaniac.com

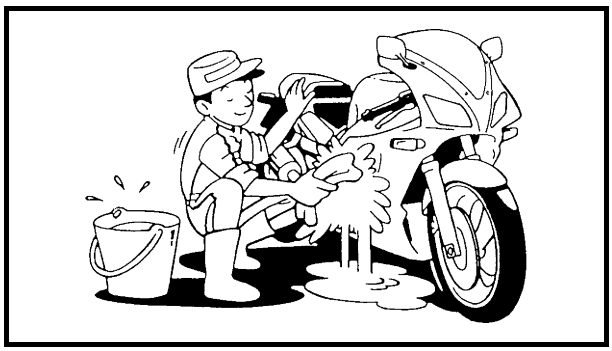

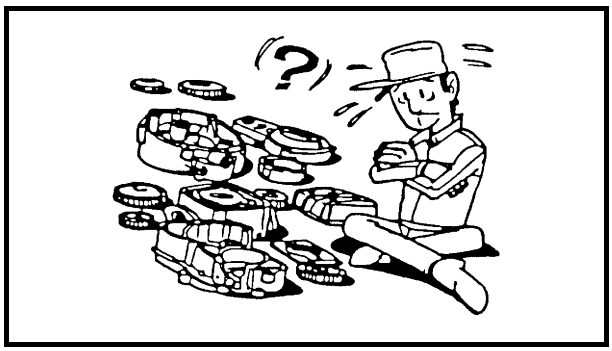

EAS00020

IMPORTANT INFORMATION

PREPARATION FOR REMOVAL AND DISASSEMBLY

1. Before removal and disassembly, remove all dirt, mud, dust and foreign material.
2. Use only the proper tools and cleaning equipment.
   Refer to “SPECIAL TOOLS”.
3. When disassembling, always keep mated parts together. This includes gears, cylinders, pistons and other parts that have been “mated” through normal wear. Mated parts must always be reused or replaced as an assembly.
4. During disassembly, clean all of the parts and place them in trays in the order of disassembly. This will speed up assembly and allow for the correct installation of all parts.
5. Keep all parts away from any source of fire.

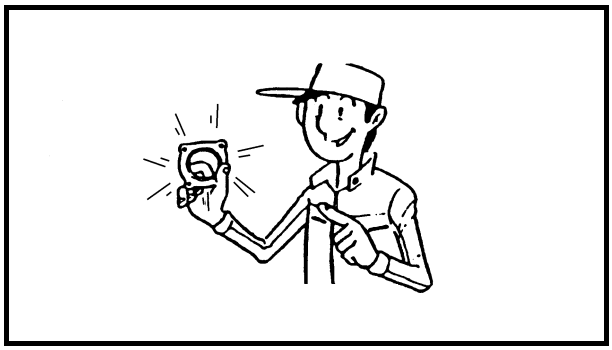

EAS00021

REPLACEMENT PARTS

Use only genuine Yamaha parts for all replacements. Use oil and grease recommended by Yamaha for all lubrication jobs. Other brands may be similar in function and appearance, but inferior in quality.

EAS00022

GASKETS, OIL SEALS AND O-RINGS

1. When overhauling the engine, replace all gaskets, seals and O-rings. All gasket surfaces, oil seal lips and O-rings must be cleaned.
2. During reassembly, properly oil all mating parts and bearings and lubricate the oil seal lips with grease.

http://manuals.magnamaniac.com

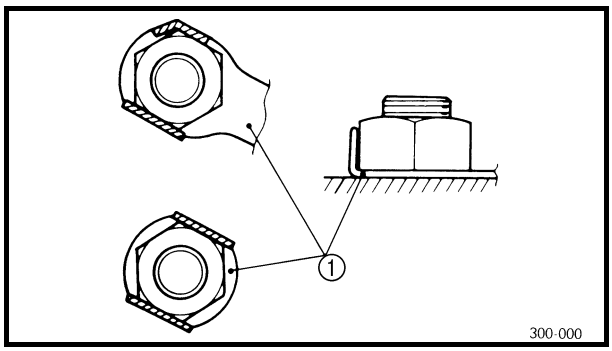

EAS00023
LOCK WASHERS/PLATES AND COTTER PINS

After removal, replace all lock washers/plates ① and cotter pins. After the bolt or nut has been tightened to specification, bend the lock tabs along a flat of the bolt or nut.

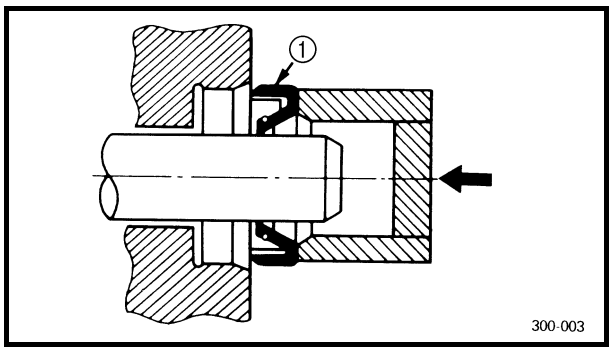

EAS00024
BEARINGS AND OIL SEALS

Install bearings and oil seals so that the manufacturer's marks or numbers are visible. When installing oil seals, lubricate the oil seal lips with a light coat of lithium-soap-based grease. Oil bearings liberally when installing, if appropriate.

① Oil seal

CAUTION:

Do not spin the bearing with compressed air because this will damage the bearing surfaces.

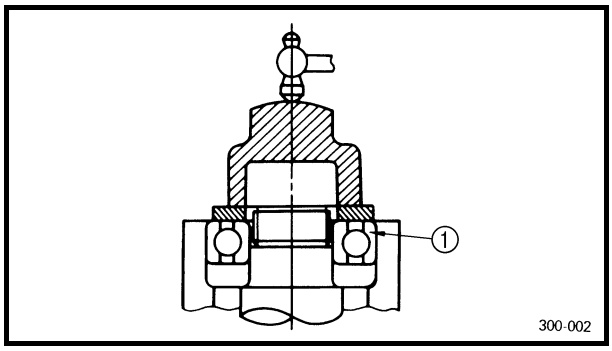

① Bearing

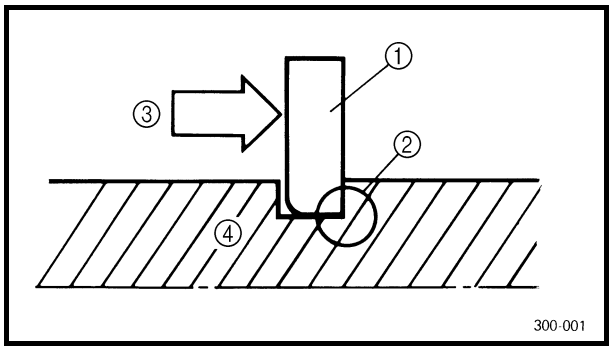

EAS00025
CIRCLIPS

Before reassembly, check all circlips carefully and replace damaged or distorted circlips. Always replace piston pin clips after one use. When installing a circlip ①, make sure the sharp-edged corner ② is positioned opposite the thrust ③ that the circlip receives.

④ Shaft

http://manuals.magnamaniac.com

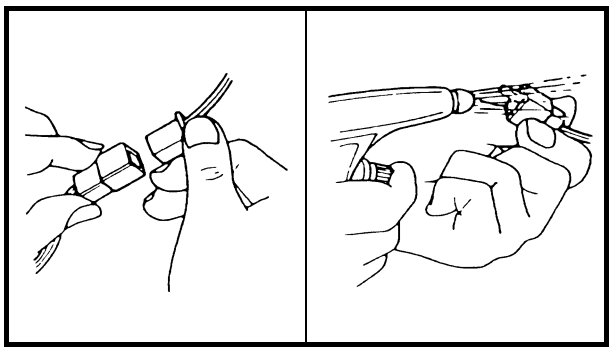

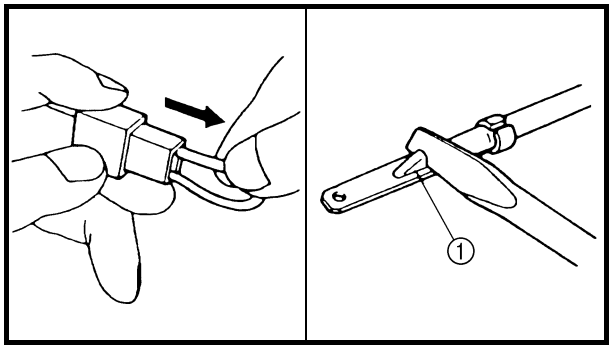

EAS00026
CHECKING THE CONNECTIONS

Check the leads, couplers, and connectors for stains, rust, moisture, etc.

1. Disconnect:
   - lead
   - coupler
   - connector
2. Check:
   - lead
   - coupler
   - connector

   Moisture → Dry with an air blower.
   Rust/stains → Connect and disconnect several times.
3. Check:
   - all connections

   Loose connection → Connect properly.

NOTE:
If the pin ① on the terminal is flattened, bend it up.

4. Connect:
   - lead
   - coupler
   - connector

NOTE:
Make sure all connections are tight.

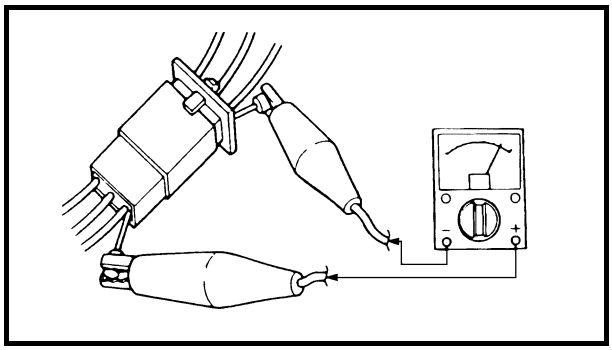

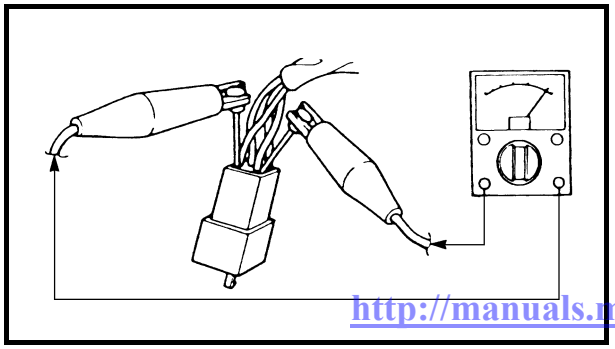

5. Check:
   - continuity

   (with the pocket tester)

	Pocket tester **90890-03112**

NOTE:
- If there is no continuity, clean the terminals.
- When checking the wire harness, perform steps (1) to (3).
- As a quick remedy, use a contact revitalizer available at most part stores.

http://manuals.magnamaniac.com

EAS00027
SPECIAL TOOLS

The following special tools are necessary for complete and accurate tune-up and assembly. Use only the appropriate special tools as this will help prevent damage caused by the use of inappropriate tools or improvised techniques. Special tools, part numbers or both may differ depending on the country.
When placing an order, refer to the list provided below to avoid any mistakes.

Tool No.	Tool name/Function	Illustration
Slide hammer bolt 90890-01083 Weight 90890-01084	Slide hammer bolt Weight These tools are used to remove or install the rocker arm shafts.	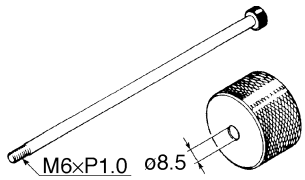
90890-01135	Crankcase separating tool This tool is used to remove the crankshaft.	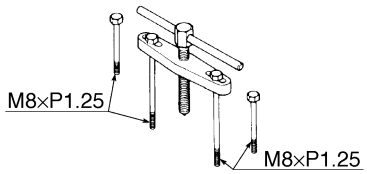
Attachment 90890-01243 Compressor 90890-04019	Valve spring compressor attachment Valve spring compressor These tools are used to remove or install the valve assemblies.	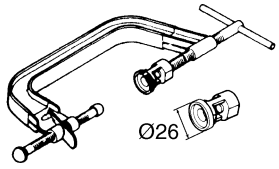
90890-01268	Ring nut wrench This tool is used to loosen or tighten the steering ring nuts.	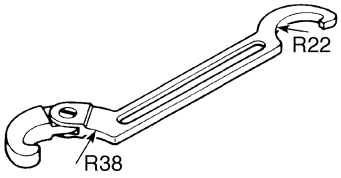
Pot 90890-01274 Bolt 90890-01275	Crankshaft installer pot Crankshaft installer bolt These tools are used to install the crankshaft.	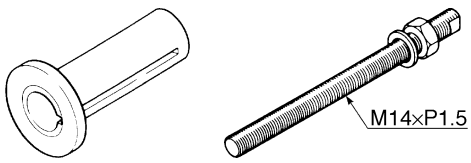
90890-01304	Piston pin puller set This tool is used to remove the piston pin.	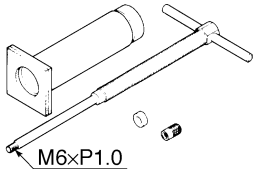
90890-01325	Radiator cap tester This tool is used to check the cooling system.	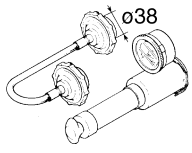

http://manuals.magnamaniac.com

Tool No.	Tool name/Function	Illustration
T-handle 90890-01326 Holder 90890-01460	T-handle Damper rod holder These tools are used to hold the damper rod holder when removing or installing the damper rod.	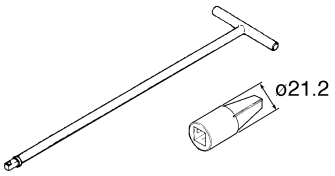
90890-01352	Radiator cap tester adaptor This tool is used to check the cooling system.	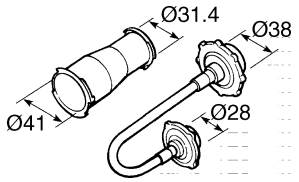
90890-01362	Flywheel puller This tool is used to remove the A.C. magneto rotor.	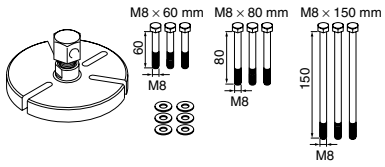
Weight 90890-01367 Attachment 90890-01374	Fork seal driver weight Fork seal driver attachment (ø43) These tools are used to install the oil seal, dust seal, and the outer tube bushing of the front fork legs.	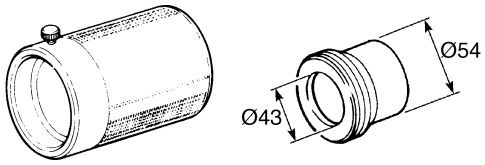
90890-01403	Steering nut wrench This tool is used to loosen or tighten the steering ring nuts.	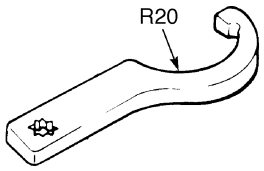
90890-01496	Radiator tester adapter This tool is used to check the cooling system.	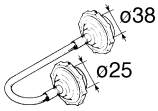
90890-01497	Radiator cap tester adapter This tool is used to check the cooling system.	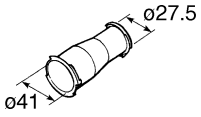
90890-01701	Sheave holder This tool is used to hold the A.C. magneto rotor when loosen or tighten the A.C. magneto rotor nut.	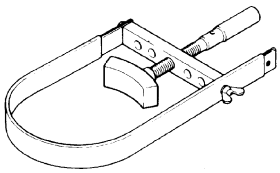

http://manuals.magnamaniac.com

Tool No.	Tool name/Function	Illustration
90890-03079	Thickness gauge This tool is used to measure the valve clearance.	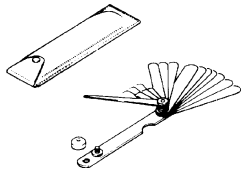
90890-03081	Compression gauge These tools are used to measure the engine compression.	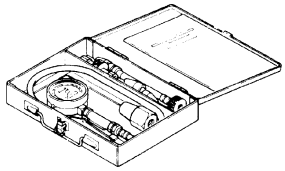
90890-03112	Pocket tester This tool is used to check the electrical system.	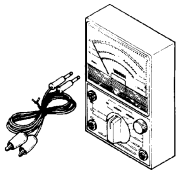
90890-03141	Timing light This tool is used to check the ignition timing.	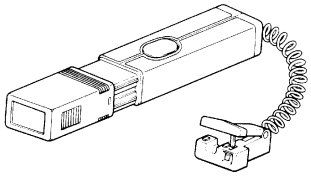
90890-03153	Pressure gauge This tool is needed to measure fuel pressure.	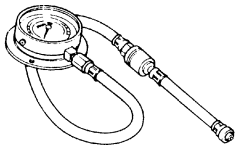
90890-03174	Digital circuit tester This tool is used to check electrical system.	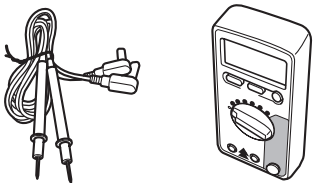
90890-03176	Fuel pressure adapter This tool is needed to measure fuel pressure.	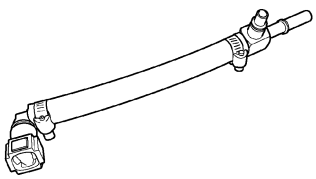
Driver 90890-04058 Installer 90890-04132	Middle driven shaft bearing driver Mechanical seal installer These tools are used to install the mechanical seal.	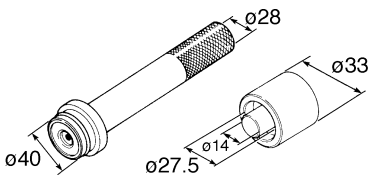

http://manuals.magnamaniac.com

Tool No.	Tool name/Function	Illustration
90890-04064	Valve guide remover (ø 6) This tool is needed to remove and install the valve guides.	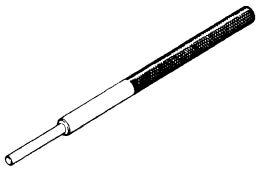
90890-04065	Valve guide installer (ø 6) This tool is needed to install the valve guides.	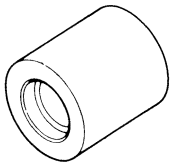
90890-04066	Valve guide reamer (ø 6) This tool is needed to rebore the new valve guides.	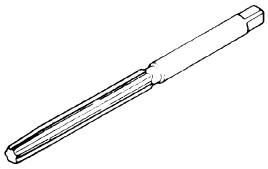
90890-04082	Adaptor (Compression gauge) This tool is needed to measure engine compression.	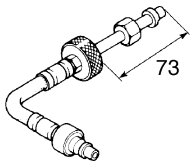
90890-04086	Universal clutch holder This tool is needed to hold the clutch boss when removing or installing the boss nut.	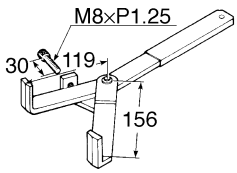
90890-04101	Valve lapper This tool is used for lapping the valve.	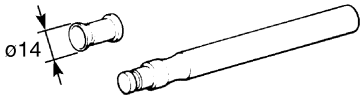
Adapter 90890-04130 Spacer 90890-04144	Adapter Spacer (crankshaft installer) These tools are used to install the crankshaft.	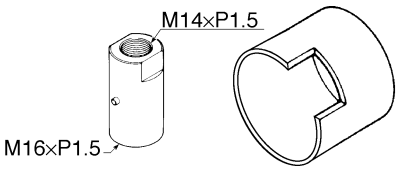
90890-06754	Ignition checker This tool is used to check the ignition system components.	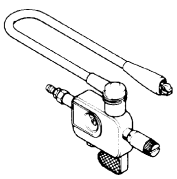

http://manuals.magnamaniac.com

Tool No.	Tool name/Function	Illustration
90890-85505	Yamaha bond No. 1215 This bond is used to seal two mating surfaces (e.g., crankcase mating surfaces).	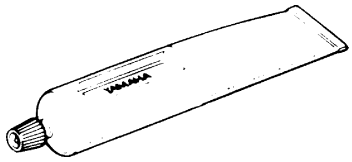

http://manuals.magnamaniac.com

http://manuals.magnamaniac.com

SPEC 2

http://manuals.magnamaniac.com

CHAPTER 2
SPECIFICATIONS

GENERAL SPECIFICATIONS 2-1

ENGINE SPECIFICATIONS 2-2

CHASSIS SPECIFICATIONS 2-11

ELECTRICAL SPECIFICATIONS 2-16

CONVERSION TABLE 2-19

GENERAL TIGHTENING TORQUE SPECIFICATIONS 2-19

TIGHTENING TORQUE 2-20
- ENGINE TIGHTENING TORQUE 2-20
- CHASSIS TIGHTENING TORQUES 2-23

LUBRICATION POINTS AND LUBRICANT TYPES 2-25
- ENGINE 2-25
- CHASSIS 2-27

COOLING SYSTEM DIAGRAMS 2-28

LUBRICATION CHART 2-30

LUBRICATION DIAGRAMS 2-31

CABLE ROUTING 2-35

http://manuals.magnamaniac.com

http://manuals.magnamaniac.com

SPECIFICATIONS

GENERAL SPECIFICATIONS

Item	Standard	Limit
Model code	XT660R: 5VK1 (Europe)	----
	5VK2 (AUS)	----
	5VK3 (GB)	----
	XT660X: 1D21 (Europe)	----
	1D22 (AUS)	----
	1D23 (GB)	----
Dimensions		
Overall length	2,240 mm (88.2 in) (XT660R)	----
	2,150 mm (84.6 in) (XT660X)	----
Overall width	845 mm (33.3 in) (XT660R)	----
	865 mm (34.1 in) (XT660X)	----
Overall height	1,230 mm (48.4 in) (XT660R)	----
	1,210 mm (47.6 in) (XT660X)	----
Seat height	865 mm (34.1 in) (XT660R)	----
	870 mm (34.3 in) (XT660X)	----
Wheelbase	1,505 mm (59.3 in) (XT660R)	----
	1,490 mm (58.7 in) (XT660X)	----
Minimum ground clearance	210 mm (8.27 in) (XT660R)	----
	205 mm (8.07 in) (XT660X)	----
Minimum turning radius	2,400 mm (94.5 in)	----
Weight		
Wet (with oil and a full fuel tank)	181 kg (399 lb) (XT660R)	----
	186 kg (410 lb) (XT660X)	----
Maximum load (total of cargo, rider, passenger, and accessories)	186 kg (410 lb)	----

http://manuals.magnamaniac.com

ENGINE SPECIFICATIONS

Item	Standard	Limit
Engine		
Engine type	Liquid-cooled, 4-stroke, SOHC	----
Displacement	660 cm^3 (40.27 cu · in)	----
Cylinder arrangement	Forward-inclined single cylinder	----
Bore × stroke	100.0 × 84.0 mm (3.94 × 3.31 in)	----
Compression ratio	10.00 : 1	----
Engine idling speed	1,300 ~ 1,500 r/min	----
Water temperature	80 °C (176 °F)	----
Oil temperature	55 ~ 60 °C (131 ~ 140 °F)	----
Standard compression pressure (at sea level)	650 kPa (6.5 kg/cm^2, 92.4 psi) at 800 r/min	----
Fuel		
Recommended fuel	Premium unleaded gasoline only	----
Fuel tank capacity		
Total (including reserve)	15.0 L (3.30 Imp gal, 3.96 US gal)	----
Reserve only	5.0 L (1.10 Imp gal, 1.32 US gal)	----
Engine oil		
Lubrication system	Dry sump	----
Recommended oil	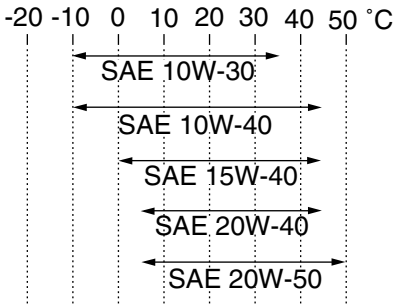 Refer to the chart for engine oil grade. API service SE, SF, SG type or higher	----
Quantity		
Total amount	2.90 L (2.55 Imp qt, 3.07 US qt)	----
Periodic oil change	2.50 L (2.20 Imp qt, 2.64 US qt)	----
With oil filter replacement	2.60 L (2.29 Imp qt, 2.75 US qt)	----
Oil filter		
Oil filter type	Paper	----
Bypass valve opening pressure	40.0 ~ 80.0 kPa (0.40 ~ 0.80 kg/cm^2, 5.8 ~ 11.6 psi)	----
Pressure check location	Oil filter chamber	----

http://manuals.magnamaniac.com

Item	Standard	Limit
Oil pump		
Oil pump type	Trochoid	----
Inner-rotor-to-outer-rotor-tip clearance	0.07 ~ 0.12 mm (0.0028 ~ 0.0047 in)	0.2 mm (0.008 in)
Outer-rotor-to-oil-pump-housing clearance	0.03 ~ 0.08 mm (0.0012 ~ 0.0031 in)	0.15 mm (0.0059 in)
Oil-pump-housing-to-inner-rotor-and-outer-rotor clearance	0.03 ~ 0.08 mm (0.0012 ~ 0.0031 in)	0.15 mm (0.0059 in)
Cooling system		
Radiator capacity	1.00 L (0.88 Imp, 1.06 US qt)	----
Radiator cap opening pressure	110.0 ~ 140.0 kPa (1.10 ~ 1.40 kg/cm^2, 16.0 ~ 20.3 psi)	----
Radiator core		
Width	280.0 mm (11.02 in)	----
Height	158.0 mm (6.22 in)	----
Depth	23.0 mm (0.91 in)	----
Coolant reservoir		
Capacity	0.25 L (0.22 Imp, 0.26 US qt)	----
<From low to full level>	0.15 L (0.13 Imp, 0.16 US qt)	----
Water pump		
Water pump type	Single-suction centrifugal pump	----
Reduction ratio	27/28 (0.964)	----
Maximum impeller shaft tilt	----	0.15 mm (0.006 in)
Starting system type	Electric starter	----
Fuel injector		
Model/manufacturer	297500-0390/DENSO	----
Quantity	1	----
Spark plug		
Model/manufacturer × quantity	CR7E/NGK × 1	----
Spark plug gap	0.7 ~ 0.8 mm (0.028 ~ 0.031 in)	----
Cylinder head		
Volume	59.10 ~ 60.50 cm^3 (3.61 ~ 3.69 cu · in)	----
Maximum warpage * 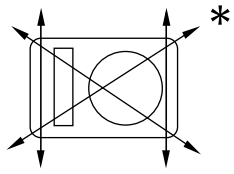	----	0.03 mm (0.0012 in)

http://manuals.magnamaniac.com

Item	Standard	Limit
Camshaft		
Drive system	Chain drive (left)	----
Intake camshaft lobe dimensions 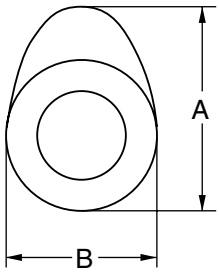		
Measurement A	43.488 ~ 43.588 mm (1.7121 ~ 1.7161 in)	43.338 mm (1.7062 in)
Measurement B	36.959 ~ 37.059 mm (1.4551 ~ 1.4590 in)	36.840 mm (1.4504 in)
Exhaust camshaft lobe dimensions 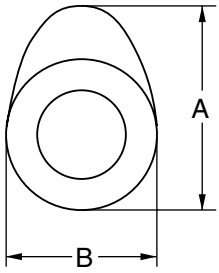		
Measurement A	43.129 ~ 43.229 mm (1.6980 ~ 1.7019 in)	42.983 mm (1.6922 in)
Measurement B	37.007 ~ 37.107 mm (1.4570 ~ 1.4609 in)	36.886 mm (1.4522 in)
Valve timing		
Intake - open (B.T.D.C.)	25°	----
Intake - closed (A.B.D.C.)	55°	----
Exhaust - open (B.B.D.C.)	60°	----
Exhaust - closed (A.T.D.C.)	20°	----
Overlap angle “A”	45°	----
Maximum camshaft runout 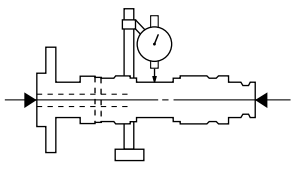	----	0.040 mm (0.0016 in)
Timing chain		
Model/number of links	98 × RH2010/126	----
Tensioning system	Automatic	----

http://manuals.magnamaniac.com

Item	Standard	Limit
Rocker arm/rocker arm shaft		
Rocker arm inside diameter	12.000 ~ 12.018 mm (0.4724 ~ 0.4731 in)	12.036 mm (0.4739 in)
Shaft outside diameter	11.981 ~ 11.991 mm (0.4717 ~ 0.4721 in)	11.955 mm (0.4707 in)
Arm-to-shaft clearance	0.009 ~ 0.037 mm (0.0004 ~ 0.0015 in)	0.081 mm (0.0032 in)
Valves, valve seats, valve guides		
Valve clearance (cold)		
Intake	0.09 ~ 0.13 mm (0.0035 ~ 0.0051 in)	----
Exhaust	0.16 ~ 0.20 mm (0.0063 ~ 0.0079 in)	----
Valve dimensions		
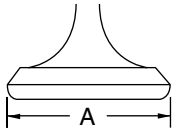 Head Diameter	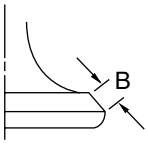 Face Width	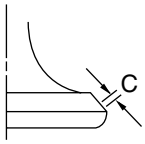 Seat Width	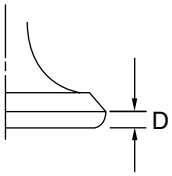 Margin Thickness
Valve head diameter A		
Intake	37.90 ~ 38.10 mm (1.4921 ~ 1.5000 in)	----
Exhaust	31.90 ~ 32.10 mm (1.2559 ~ 1.2638 in)	----
Valve face width B		
Intake	2.260 mm (0.0890 in)	----
Exhaust	1.91 ~ 2.62 mm (0.075 ~ 0.103 in)	----
Valve seat width C		
Intake	1.00 ~ 1.20 mm (0.0394 ~ 0.0472 in)	1.6 mm (0.06 in)
Exhaust	1.00 ~ 1.20 mm (0.0394 ~ 0.0472 in)	1.6 mm (0.06 in)
Valve margin thickness D		
Intake	0.80 ~ 1.20 mm (0.0315 ~ 0.0472 in)	----
Exhaust	0.80 ~ 1.20 mm (0.0315 ~ 0.0472 in)	----
Valve stem diameter		
Intake	5.975 ~ 5.990 mm (0.2352 ~ 0.2358 in)	5.945 mm (0.2341 in)
Exhaust	5.960 ~ 5.975 mm (0.2346 ~ 0.2352 in)	5.930 mm (0.2335 in)
Valve guide inside diameter		
Intake	6.000 ~ 6.012 mm (0.2362 ~ 0.2367 in)	6.05 mm (0.2382 in)
Exhaust	6.000 ~ 6.012 mm (0.2362 ~ 0.2367 in)	6.05 mm (0.2382 in)

http://manuals.magnamaniac.com

Item	Standard	Limit
Valve-stem-to-valve-guide clearance		
Intake	0.010 ~ 0.037 mm (0.0004 ~ 0.0015 in)	0.08 mm (0.0031 in)
Exhaust	0.025 ~ 0.052 mm (0.0010 ~ 0.0020 in)	0.10 mm (0.0039 in)
Valve stem runout	----	0.010 mm (0.0004 in)
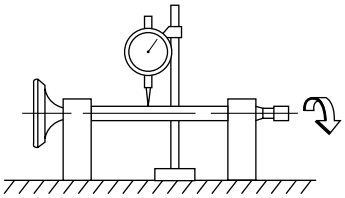		
Valve seat width		
Intake	1.00 ~ 1.20 mm (0.0394 ~ 0.0472 in)	1.6 mm (0.06 in)
Exhaust	1.00 ~ 1.20 mm (0.0394 ~ 0.0472 in)	1.6 mm (0.06 in)
Valve springs		
Free length		
Intake	40.38 mm (1.59 in)	38.36 mm (1.51 in)
Exhaust	40.38 mm (1.59 in)	38.36 mm (1.51 in)
Installed length (valve closed)		
Intake	35.00 mm (1.38 in)	----
Exhaust	35.00 mm (1.38 in)	----
Compressed spring force (installed)		
Intake	171 ~ 197 N (17.44 ~ 20.09 kg, 38.44 ~ 44.29 lb)	----
Exhaust	171 ~ 197 N (17.44 ~ 20.09 kg, 38.44 ~ 44.29 lb)	----
Spring tilt *		
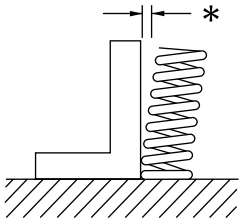		
Intake	----	2.5°/1.8 mm (2.5°/0.071 in)
Exhaust	----	2.5°/1.8 mm (2.5°/0.071 in)
Winding direction (top view)		
Intake	Clockwise	----
Exhaust	Clockwise	----

http://manuals.mgnamaniac.com

Item	Standard	Limit
Cylinder		
Cylinder arrangement	Forward-inclined single cylinder	----
Bore × stroke	100.0 × 84.0 mm (3.94 × 3.31 in)	----
Compression ratio	10 : 1	----
Bore	100.000 ~ 100.010 (3.9370 ~ 3.9374 in)	100.080 mm (3.9402 in)
Maximum taper	----	0.05 mm (0.002 in)
Maximum out-of-round	----	0.05 mm (0.002 in)
Piston		
Piston-to-cylinder clearance	0.030 ~ 0.055 mm (0.0012 ~ 0.0022 in)	0.13 mm (0.0051 in)
Diameter D	99.955 ~ 99.970 mm (3.9352 ~ 3.9358 in)	----
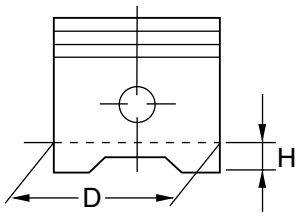		
Height H	10.0 mm (0.39 in)	----
Piston pin bore (in the piston)		
Diameter	23.004 ~ 23.015 mm (0.9057 ~ 0.9061 in)	23.045 mm (0.9073 in)
Offset	0.50 mm (0.0197 in)	----
Offset direction	Intake side	----
Piston pin		
Outside diameter	22.991 ~ 23.000 (0.9052 ~ 0.9055 in)	22.971 mm (0.9044 in)
Piston-pin-to-piston-pin-bore clearance	0.004 ~ 0.024 mm (0.0002 ~ 0.0009 in)	0.074 mm (0.0029 in)
Piston rings		
Top ring		
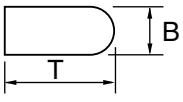		
Ring type	Barrel	----
Dimensions (B × T)	1.20 × 3.80 mm (0.047 × 0.150 in)	----
End gap (installed)	0.20 ~ 0.35 mm (0.0079 ~ 0.0138 in)	0.60 mm (0.0236 in)
Ring side clearance	0.030 ~ 0.080 mm (0.0012 ~ 0.0031 in)	0.13 mm (0.0051 in)

http://manuals.magnamaniac.com

Item	Standard	Limit
2nd ring 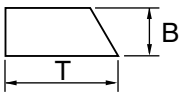 		
Ring type	Taper	----
Dimensions (B × T)	1.20 × 4.00 mm (0.047 × 0.157 in)	----
End gap (installed)	0.35 ~ 0.50 mm (0.0138 ~ 0.0197 in)	0.85 mm (0.0335 in)
Ring side clearance	0.030 ~ 0.070 mm (0.0012 ~ 0.0028 in)	0.11 mm (0.0043 in)
Oil ring 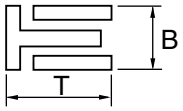 		
Dimensions (B × T)	2.50 × 3.40 mm (0.098 × 0.134 in)	----
End gap (installed)	0.20 ~ 0.70 mm (0.0079 ~ 0.0276 in)	----
Ring side clearance	0.060 ~ 0.150 mm (0.0024 ~ 0.0059 in)	----
Crankshaft 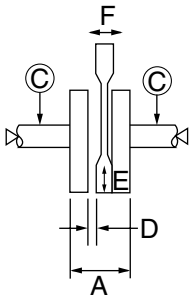 		
Width A	74.95 ~ 75.00 mm (2.9508 ~ 2.9528 in)	----
Maximum runout C	----	0.04 mm (0.0016 in)
Big end side clearance D	0.350 ~ 0.650 mm (0.0138 ~ 0.0256 in)	1.0 mm (0.04 in)
Big end radial clearance E	0.010 ~ 0.025 mm (0.0004 ~ 0.0010 in)	----
Small end free play F	0.16 ~ 0.40 (0.0063 ~ 0.0157 in)	----
Balancer		
Balancer drive method	Gear	----

http://manuals.magnamaniac.com

Item	Standard	Limit
Clutch		
Clutch type	Wet, multiple disc	----
Clutch release method	Outer pull, rack and pinion pull	----
Operation	Left-hand operation	----
Clutch cable free play (at the end of the clutch lever)	10.0 ~ 15.0 mm (0.39 ~ 0.59 in)	----
Friction plates 1 (inside dia.: 120 mm)		
Thickness	2.90 ~ 3.10 mm (0.114 ~ 0.122 in)	2.80 mm (0.110 in)
Plate quantity	4	----
Friction plates 2		
Thickness	2.92 ~ 3.08 mm (0.115 ~ 0.121 in)	2.80 mm (0.110 in)
Plate quantity	2	----
Friction plates 3 (inside dia.: 128 mm)		
Thickness	2.90 ~ 3.10 mm (0.114 ~ 0.122 in)	2.80 mm (0.110 in)
Plate quantity	1	----
Clutch plates		
Thickness	1.50 ~ 1.70 mm (0.059 ~ 0.067 in)	----
Plate quantity	6	----
Maximum warpage	----	0.20 mm (0.0079 in)
Clutch spring		
Free length	55.6 mm (2.19 in)	52.82 mm (2.08 in)
Spring quantity	5	----
Transmission		
Transmission type	Constant mesh, 5-speed	----
Primary reduction system	Spur gear	----
Primary reduction ratio	75/36 (2.083)	----
Secondary reduction system	Chain drive	----
Secondary reduction ratio	45/15 (3.000)	----
Operation	Left-foot operation	----
Gear ratios		
1st gear	30/12 (2.500)	----
2nd gear	26/16 (1.625)	----
3rd gear	23/20 (1.150)	----
4th gear	20/22 (0.909)	----
5th gear	20/26 (0.769)	----

http://manuals.magnamaniac.com

Item	Standard	Limit
Maximum main axle runout	----	0.08 mm (0.0031 in)
Maximum drive axle runout	----	0.08 mm (0.0031 in)
Shifting mechanism		
Shift mechanism type	Shift drum and guide bar	----
Decompression device		
Device type	Auto decomp	----
Air filter type	Oil-coated paper element	----
Fuel pump		
Pump type	Electrical	----
Model/manufacturer	5VK/DENSO	----
Consumption amperage <maximum>	3.5 A	----
Output pressure	294 kPa (2.94 kg/cm^2, 41.8 psi)	----
Throttle body		
Model/manufacturer × quantity	44EHS/MIKUNI × 1	----
Intake vacuum pressure	37.6 ~ 40.2 kPa (282 ~ 302 mmHg, 11.1 ~ 11.9 inHg)	----
Throttle cable free play (at the flange of the throttle grip)	3.0 ~ 5.0 mm (0.12 in ~ 0.20 mm)	----
ID mark	5VK1 00	----
Throttle valve size	#50	----

http://manuals.magnamaniac.com

CHASSIS SPECIFICATIONS

Item	Standard	Limit
Frame		
Frame type	Diamond	----
Caster angle	27.25° (XT660R)	----
	26° (XT660X)	----
Trail	107 mm (4.21 in) (XT660R)	----
	94 mm (3.70 in) (XT660X)	----
Front wheel		
Wheel type	Spoke wheel	----
Rim		
Size	21 × 1.85 (XT660R)	----
	17M/C × MT3.50 (XT660X)	----
Material	Aluminum	----
Wheel travel	225 mm (8.86 in) (XT660R)	----
	200 mm (7.87 in) (XT660X)	----
Wheel runout		
Maximum radial wheel runout	----	2.0 mm (0.08 in)
Maximum lateral wheel runout	----	2.0 mm (0.08 in)
Wheel axle bending limit	----	0.25 mm (0.01 in)
Rear wheel		
Wheel type	Spoke wheel	----
Rim		
Size	17M/C × MT2.75 (XT660R)	----
	17M/C × MT4.25 (XT660X)	----
Material	Aluminum	----
Wheel travel	200.0 mm (7.87 in)	----
Wheel runout		
Maximum radial wheel runout	----	2.0 mm (0.08 in)
Maximum lateral wheel runout	----	2.0 mm (0.08 in)
Wheel axle bending limit	----	0.25 mm (0.01 in)

http://manuals.magnamaniac.com

Item	Standard	Limit
Front tire		
Tire type	With tube	----
Size	90/90-21M/C 54S, 90/90-21M/C 54T (XT660R)	----
	120/70R 17M/C 58 H (XT660X)	----
Model/manufacturer	TOURANCE FRONT/METZELER, SIRAC/MICHELIN (XT660R)	----
	DRAGON/PIRELLI (XT660X)	----
Tire pressure (cold)		
0 ~ 90 kg (0 ~ 198 lb)	200 kPa (2.00 kgf/cm, 29 psi) (XT660R)	----
	210 kPa (2.10 kgf/cm, 30 psi) (XT660X)	----
90 (198 lb) ~ Maximum load*	200 kPa (2.00 kgf/cm, 29 psi) (XT660R)	----
	220 kPa (2.20 kgf/cm, 31 psi) (XT660X)	----
	* Load is the total weight of the cargo, rider, passenger and accessories.	
Off-road riding	200 kPa (2.00 kgf/cm, 29 psi) (XT660R)	----
Minimum tire tread depth	----	1.6 mm (0.063 in)
Rear tire		
Tire type	With tube	----
Size	130/80-17M/C 65S, 130/80-17M/C 65T (XT660R)	----
	160/60R 17M/C 69H (XT660X)	----
Model/manufacturer	TOURANCE/METZELER, SIRAC A/ MICHELIN (XT660R)	----
	DRAGON/PIRELLI (XT660X)	----
Tire pressure (cold)		
0 ~ 90 kg (0 ~ 198 lb)	200 kPa (2.00 kgf/cm, 29 psi) (XT660R)	----
	210 kPa (2.10 kgf/cm, 30 psi) (XT660X)	----
90 (198 lb) ~ Maximum load*	225 kPa (2.25 kgf/cm, 33 psi) (XT660R)	----
	230 kPa (2.30 kgf/cm, 33 psi) (XT660X)	----
	* Load is the total weight of the cargo, rider, passenger and accessories.	
Off-road riding	200 kPa (2.00 kgf/cm, 29 psi) (XT660R)	----
Minimum tire tread depth	----	1.6 mm (0.063 in)

http://manuals.magnamaniac.com

Item	Standard	Limit
Front brakes		
Brake type	Single-disc brake	----
Operation	Right-hand operation	----
Recommended fluid	DOT 4	----
Brake discs		
Diameter × thickness	298.0 × 4.5 mm (11.73 × 0.18 in) (XT660R)	----
	320.0 × 4.5 mm (12.60 × 0.18 in) (XT660X)	----
Minimum thickness	----	4.0 mm (0.16 in)
Maximum deflection	----	0.15 mm (0.006 in)
Pad thickness inner	4.1 mm (0.16 in) (XT660R)	1.0 mm (0.04 in)
	5.2 mm (0.20 in) (XT660X)	1.0 mm (0.04 in)
Pad thickness outer	4.1 mm (0.16 in) (XT660R)	1.0 mm (0.04 in)
	5.2 mm (0.20 in) (XT660X)	1.0 mm (0.04 in)
Master cylinder inside diameter	12.7 mm (0.50 in)	----
Caliper cylinder inside diameter	32.00 mm × 1 (1.26 in × 1) and 30.00 mm × 1 (1.18 in × 1) (XT660R)	----
	34.00 mm × 2 (1.34 in × 2) and 30.00 mm × 2 (1.18 in × 2) (XT660X)	----
Rear brake		
Brake type	Single-disc brake	----
Operation	Right-foot operation	----
Brake pedal position (below the top of the rider footrest)	12.0 mm (0.47 in)	----
Recommended fluid	DOT 4	----
Brake discs		
Diameter × thickness	245 × 5.0 mm (9.65 × 0.20 in)	----
Minimum thickness	----	4.5 mm (0.18 in)
Maximum deflection	----	0.15 mm (0.006 in)
Pad thickness inner	5.5 mm (0.22 in)	1.0 mm (0.04 in)
Pad thickness outer	5.5 mm (0.22 in)	1.0 mm (0.04 in)
Master cylinder inside diameter	12.7 mm (0.50 in)	----
Caliper cylinder inside diameter	34.00 mm × 1 (1.34 in × 1)	----

http://manuals.magnamaniac.com

Item	Standard	Limit
Steering		
Steering bearing type	Taper roller bearing	----
Lock to lock angle (left)	44.0°	----
Lock to lock angle (right)	44.0°	----
Front suspension		
Suspension type	Telescopic fork	----
Front fork type	Coil spring/oil damper	----
Front fork travel	225.0 mm (8.86 in) (XT660R)	----
	200.0 mm (7.87 in) (XT660X)	----
Spring		
Free length	633.0 mm (24.92 in) (XT660R)	620 mm (24.41 in)
	593.0 mm (23.35 in) (XT660X)	581 mm (22.87 in)
Spacer length	0 mm (0 in)	----
Installed length	628.0 mm (24.72 in) (XT660R)	----
	588.0 mm (23.15 in) (XT660X)	----
Spring rate (K1)	3.75 N/mm (0.38 kg/mm, 21.41 lb/in) (XT660R)	----
	3.75 N/mm (0.38 kg/mm, 21.41 lb/in) (XT660X)	----
Spring stroke (K1)	0 ~ 120.0 mm (0 ~ 4.72 in) (XT660R)	----
	0 ~ 120.0 mm (0 ~ 4.72 in) (XT660X)	----
Spring rate (K2)	6.00 N/mm (0.61 kg/mm, 34.26 lb/in) (XT660R)	----
	6.00 N/mm (0.61 kg/mm, 34.26 lb/in) (XT660X)	----
Spring stroke (K2)	120.0 ~ 225.0 mm (4.72 ~ 8.86 in) (XT660R)	----
	120.0 ~ 200.0 mm (4.72 ~ 7.87 in) (XT660X)	----
Optional spring available	No	----
Fork oil		
Recommended oil	Fork oil 10 W or equivalent	----
Quantity (each front fork leg)	640.0 cm^3 (22.53 Imp oz, 21.64 US oz) (XT660R)	----
	600.0 cm^3 (21.12 Imp oz, 20.29 US oz) (XT660X)	----
Level (from the top of the inner tube, with the inner tube fully compressed, and without the fork spring)	125.0 mm (4.92 in) (XT660R)	----
	125.0 mm (4.92 in) (XT660X)	----
Inner tube outer diameter	43.0 mm (1.69 in)	----
Inner tube bearing	----	0.2 mm (0.0079 in)

http://manuals.magnamaniac.com

Item	Standard	Limit
Rear suspension		
Suspension type	Swingarm (monocross)	----
Rear shock absorber assembly type	Coil spring/gas-oil damper	----
Rear shock absorber assembly travel	65.0 mm (2.56 in)	----
Spring		
Free length	216.0 mm (8.50 in)	205 mm (8.07 in)
Installed length	206.0 mm (8.11 in)	----
Spring rate (K1)	125.00 N/mm (12.75 kg/mm, 713.75 lb/in)	----
Spring stroke (K1)	0 ~ 65.0 mm (0 ~ 2.56 in)	----
Optional spring available	No	----
Standard spring preload gas/air pressure	980 kPa (9.8 kg/cm^2, 139.4 psi)	----
Swingarm		
Free play (at the end of the swingarm)		
Radial	----	1.0 mm (0.04 in)
Axial	----	1.0 mm (0.04 in)
Drive chain		
Type/manufacturer	DID520VP/DAIDO	----
Link quantity	110	----
Drive chain slack	40.0 ~ 55.0 mm (1.57 ~ 2.17 in)	----
Maximum 15-link section	240.5 mm (9.47 in)	----

http://manuals.magnamaniac.com

ELECTRICAL SPECIFICATIONS

Item	Standard	Limit
System voltage	12 V	----
Ignition system		
Ignition system type	Transistorized coil ignition (digital)	----
Ignition timing	9.0° BTDC at 1,400 r/min	----
Advancer type	Electric	----
Crankshaft position senor resistance/ color	192 ~ 288 Ω at 20 °C (68 °F) blue/yellow–green/white	----
Transistorized coil ignition unit model/manufacturer	TBDF08/DENSO	----
Ignition coil		
Model/manufacturer	JO300/DENSO	----
Minimum ignition spark gap	6.0 mm (0.24 in)	----
Primary coil resistance	3.4 ~ 4.6 Ω at 20 °C (68 °F)	----
Secondary coil resistance	10.4 ~ 15.6 kΩ at 20 °C (68 °F)	----
Spark plug cap		
Material	Rubber	----
Resistance	10.0 kΩ at 20 °C (68 °F)	----
Charging system		
System type	A.C. magneto	----
Model/manufacturer	LMX51/DENSO	----
Nominal output	14.0 V/20.8 A at 5,000 r/min	----
Stator coil resistance/color	0.224 ~ 0.336 Ω at 20 °C (68 °F) white–white	----
Rectifier/regulator		
Regulator type	Semiconductor, short circuit	----
Model/manufacturer	SH713AA/SHINDENGEN	----
No-load regulated voltage	14.1 ~ 14.9 V	----
Rectifier capacity	35.0 A	----
Withstand voltage	200.0 V	----
Battery		
Battery type/manufacturer	GT9B-4/GS	----
Battery voltage/capacity	12 V/8.0 AH	----
Ten hour rate amperage	0.8 A	----
Headlight type	Halogen bulb	----
Indicator light (voltage/wattage × quantity)		
Neutral indicator light	LED × 1	----
High beam indicator light	LED × 1	----
Fuel level warning light	LED × 1	----
Turn signal indicator light	LED × 1	----
Engine trouble warning light	LED × 1	----
Coolant temperature warning light	LED × 1	----
Immobilizer system indicator light	LED × 1	----

http://manuals.magnamaniac.com

Item	Standard	Limit
Bulbs (voltage/wattage × quantity)		
Headlight	12 V 55.0 W/60.0 W × 1	----
Auxiliary light	12 V 5.0 W × 1	----
Tail/brake light	12 V 5.0 W/21.0 W × 1	----
Front turn signal light	12 V 10.0 W × 2	----
Rear turn signal light	12 V 10.0 W × 2	----
Meter lighting	EL	----
Electric starting system		
System type	Constant mesh	----
Starter motor		
Model/manufacturer	SM-13/MITSUBA	----
Power output	0.80 kW	----
Armature coil resistance	0.025 ~ 0.035 Ω at 20 °C (68 °F)	----
Brushes		
Overall length	12.5 mm (0.49 in)	5.00 mm (0.20 in)
Spring force	7.65 ~ 10.01 N (780 ~ 1,021 gf, 27.51 ~ 36.01 oz)	----
Commutator diameter	28.0 mm (1.10 in)	27 mm (1.06 in)
Mica undercut	0.70 mm (0.028 in)	----
Starter relay		
Model /manufacturer	MS5F-561/JIDECO	----
Amperage	180.0 A	----
Coil resistance	4.18 ~ 4.62 Ω at 20 °C (68 °F)	----
Horn		
Horn type	Plane	----
Model/manufacturer × quantity	YF-12/NIKKO × 1	----
Maximum amperage	3.0 A	----
Performance	105 ~ 120 db/2 m (6.6 ft)	----
Coil resistance	1.15 ~ 1.25 Ω at 20 °C (68 °F)	----
Turn signal/hazard relay		
Relay type	Full-transistor	----
Model/manufacturer	FE218BH /DENSO	----
Self-cancelling device built-in	No	----
Turn signal blinking frequency	75 ~ 95 cycles/min.	----
Wattage	10 W × 2 + 3.4 W	----
Relay unit		
Model/manufacturer	G8R-30Y-V4/OMRON	----
Coil resistance	162 ~ 198 Ω	----
Diode	Yes	----
Throttle position sensor		
Model/manufacturer	5PS1/MIKUNI	----
Resistance	4.0 ~ 6.0 kΩ	----

http://manuals.magnamaniac.com

Item	Standard	Limit
Headlight relay		
Model/manufacturer	ACM33211 M04/MATSUSHITA	----
Radiator fan		
Model/manufacturer	5VW/KTM	----
Fan motor relay		
Model/manufacturer	ACM33211 M04/MATSUSHITA	----
Intake air pressure sensor		
Thermostat type/manufacturer	5PS1/DENSO	----
Output voltage	3.4 ~ 3.8 V	----
Intake air temperature sensor		
Model/manufacturer	5VU1/DENSO	----
Resistance	2.21 ~ 2.69 kΩ at 20 °C (68 °F)	----
	0.290 ~ 0.354 kΩ at 80 °C (176 °F)	----
Coolant temperature sensor		
Model/manufacturer	5PS1/DENSO	----
Resistance	2.32 ~ 2.59 kΩ at 20 °C (68 °F)	----
	0.310 ~ 0.326 kΩ at 80 °C (176 °F)	----
	0.140 ~ 0.145 kΩ at 110 °C (230 °F)	----
Fuses (amperage × quantity)		
Main fuse	30 A × 1	----
Signaling system fuse	10 A × 1	----
Headlight fuse	20 A × 1	----
Ignition fuse	10 A × 1	----
Fuel injection system fuse	10 A × 1	----
Radiator fan motor fuse	7.5 A × 1	----
Parking lighting fuse	10 A × 1	----
Backup fuse (immobilizer unit, meter assembly)	10 A × 1	----
Reserve fuse	30 A × 1	----
	20 A × 1	----
	10 A × 1	----
	7.5 A × 1	----

http://manuals.magnamaniac.com

EAS00028
CONVERSION TABLE

All specification data in this manual are listed in SI and METRIC UNITS.
Use this table to convert METRIC unit data to IMPERIAL unit data.

Ex.

METRIC		MULTIPLIER		IMPERIAL
** mm	×	0.03937	=	** in
2 mm	×	0.03937	=	0.08 in

CONVERSION TABLE

METRIC TO IMPERIAL			
	Metric unit	Multiplier	Imperial unit
Tightening torque	m · kg m · kg cm · kg cm · kg	7.233 86.794 0.0723 0.8679	ft · lb in · lb ft · lb in · lb
Weight	kg g	2.205 0.03527	lb oz
Speed	km/hr	0.6214	mph
Distance	km m m cm mm	0.6214 3.281 1.094 0.3937 0.03937	mi ft yd in in
Volume/ Capacity	cc (cm^3) cc (cm^3) lt (liter) lt (liter)	0.03527 0.06102 0.8799 0.2199	oz (IMP liq.) cu · in qt (IMP liq.) gal (IMP liq.)
Misc.	kg/mm kg/cm^2 Centigrade (°C)	55.997 14.2234 9/5+32	lb/in psi (lb/in^2) Fahrenheit (°F)

EAS00030
GENERAL TIGHTENING TORQUE SPECIFICATIONS

This chart specifies tightening torques for standard fasteners with a standard ISO thread pitch. Tightening torque specifications for special components or assemblies are provided for each chapter of this manual. To avoid warpage, tighten multi-fastener assemblies in a crisscross pattern and progressive stages until the specified tightening torque is reached. Unless otherwise specified, tightening torque specifications require clean, dry threads. Components should be at room temperature.

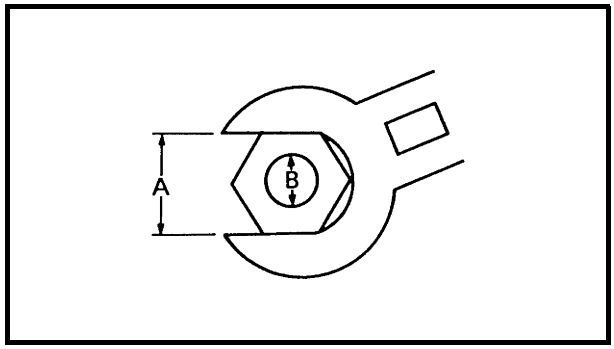

A: Distance between flats
B: Outside thread diameter

A (nut)	B (bolt)	General tightening torques		
		Nm	m · kg	ft · lb
10 mm	6 mm	6	0.6	4.3
12 mm	8 mm	15	1.5	11
14 mm	10 mm	30	3.0	22
17 mm	12 mm	55	5.5	40
19 mm	14 mm	85	8.5	61
22 mm	16 mm	130	13.0	94

http://manuals.magnamaniac.com

TIGHTENING TORQUE

ENGINE TIGHTENING TORQUE

Part to be tightened	Part name	Thread size	Q'ty	Tightening torque			Remarks
				Nm	m · kg	ft · lb	
Cylinder head (exhaust pipe)	Stud bolt	M8	4	15	1.5	11	
Cylinder head (left side) ℓ = 145 mm (5.71 in)	Bolt	M9	2	50	5.0	36	E
Cylinder head (right side) ℓ = 135 mm (5.31 in)	Bolt	M9	2	50	5.0	36	E
Cylinder head (center lower side)	Bolt	M9	2	45	4.5	32	E
Cylinder head	Bolt	M6	2	10	1.0	7.2	
Spark plug	—	M10S	1	13	1.3	9.4	
Cylinder (left side) ℓ = 116 mm (4.57 in) 1st	Bolt	M10	2	15	1.5	11	E
2nd				50	5.0	36	
Cylinder (right side) ℓ = 109 mm (4.29 in) 1st	Bolt	M10	2	15	1.5	11	E
2nd				50	5.0	36	
Cylinder	Bolt	M6	2	10	1.0	7.2	
Tappet cover (exhaust side)	Bolt	M6	4	10	1.0	7.2	
Tappet cover (intake side)	Bolt	M6	4	10	1.0	7.2	
Camshaft sprocket cover	Bolt	M6	2	10	1.0	7.2	
Camshaft sprocket	Bolt	M7	2	20	2.0	14	
Camshaft retainer	Bolt	M6	2	10	1.0	7.2	G
Valve adjusting screw	Nut	M6	4	14	1.4	10	
Balancer driven gear	Nut	M18	1	70	7.0	50	Use a lock washer. E
Primary drive gear	Nut	M20	1	80	8.0	58	Use the lock washer. M
Timing chain tensioner	Bolt	M6	2	10	1.0	7.2	
Timing chain tensioner cap	Bolt	M16	1	20	2.0	14	
Timing chain guide (intake)	Bolt	M6	2	8	0.8	5.8	
Thermostat cover	Bolt	M6	2	10	1.0	7.2	
Coolant temperature sensor	—	M12	1	18	1.8	13	
Water pump cover	Bolt	M6	3	10	1.0	7.2	
Water pump assembly	Bolt	M6	2	10	1.0	7.2	
Water pump outlet pipe	Bolt	M6	1	10	1.0	7.2	
Water jacket joint	Bolt	M6	2	10	1.0	7.2	
Crankcase cover (right)	Bolt	M6	9	10	1.0	7.2	

http://manuals.magnamaniac.com

Part to be tightened	Part name	Thread size	Q'ty	Tightening torque			Remarks
				Nm	m · kg	ft · lb	
Oil strainer	Bolt	M6	3	10	1.0	7.2	
Oil pump	Screw	M6	3	10	1.0	7.2	
Oil baffle plate 2	Bolt	M5	2	4	0.4	2.9	
Oil pump assembly	Screw	M6	1	7	0.7	5.1	
Engine oil drain bolt (crankcase)	Bolt	M14	1	30	3.0	22	
Oil filter element cover	Bolt	M6	2	10	1.0	7.2	
Oil filter drain bolt	Bolt	M6	1	10	1.0	7.2	
Engine oil drain bolt (oil tank)	Bolt	M8	1	18	1.8	13	
Bleed bolt (oil filter element)	Bolt	M5	1	5	0.5	3.6	
Oil delivery pipe 1	Union Bolt	M10	2	20	2.0	14	
	Bolt	M6	1	10	1.0	7.2	
Oil delivery pipe 2	Union Bolt	M8	2	18	1.8	13	
Oil delivery hose 1	Bolt	M6	1	10	1.0	7.2	
Oil delivery hose 2	Bolt	M6	2	10	1.0	7.2	Sealant
Throttle body joint clamp screw	—	M4	2	6	0.6	4.3	
Air filter case joint clamp screw	—	M5	1	4	0.4	2.9	
Air filter case	Bolt	M6	4	10	1.0	7.2	
Exhaust pipe and exhaust pipe bracket	Bolt	M8	2	27	2.7	19	
Exhaust pipe bracket and frame	Bolt	M8	2	23	2.3	17	
Exhaust pipe and muffler	Bolt	M8	1	12	1.2	8.7	
Exhaust pipe	Nut	M8	4	20	2.0	14	
Muffler	Bolt	M8	4	27	2.7	19	
Exhaust pipe and muffler	Bolt	M8	2	20	2.0	14	
Air cut-off valve outlet pipe	Bolt	M6	2	10	1.0	7.2	
Clutch cover	Bolt	M6	7	10	1.0	7.2	
Clutch cable holder	Bolt	M6	2	10	1.0	7.2	
Clutch spring	Bolt	M6	5	9	0.9	6.5	
Clutch boss	Nut	M20	1	90	9.0	65	
Shift shaft spring stopper	Bolt	M8	1	22	2.2	16	
Torque limiter cover	Bolt	M6	4	10	1.0	7.2	
A.C. magneto cover	Bolt	M6	8	10	1.0	7.2	
A.C. magneto rotor	Nut	M16	1	80	8.0	58	
A.C. magneto lead holder	Bolt	M6	1	10	1.0	7.2	
Crankcase (left side)	Bolt	M6	6	10	1.0	7.2	
Crankcase (right side)	Bolt	M6	8	10	1.0	7.2	
Lead holder	Bolt	M6	2	10	1.0	7.2	
Bearing retainer	Bolt	M6	3	10	1.0	7.2	

http://manuals.magnamaniac.com

Part to be tightened	Part name	Thread size	Q'ty	Tightening torque			Remarks
				Nm	m · kg	ft · lb	
Starter clutch	Bolt	M8	3	30	3.0	22	
Stator coil	Bolt	M6	3	10	1.0	7.2	
Crankshaft position sensor	Bolt	M5	2	7	0.7	5.1	
Starter motor and crankcase	Bolt	M6	2	10	1.0	7.2	
Starter motor lead	Nut	M6	1	5	0.5	3.6	
Brush holder and starter motor yoke	Nut	M6	1	11	1.1	8	
Starter motor assembly	Bolt	M5	2	5	0.5	3.6	
Drive axle oil seal retainer	Nut	M6	2	10	1.0	7.2	Sealant
Drive sprocket	Nut	M18	1	120	12.0	85	Use the lock washer.
Neutral switch	Bolt	M6	2	4	0.4	2.9	
Speed sensor	Bolt	M6	1	10	1.0	7.2	
Shift pedal	Bolt	M6	1	16	1.6	11	
Intake air pressure sensor	Nut	M6	2	7	0.7	5.1	

Cylinder head tightening sequence:

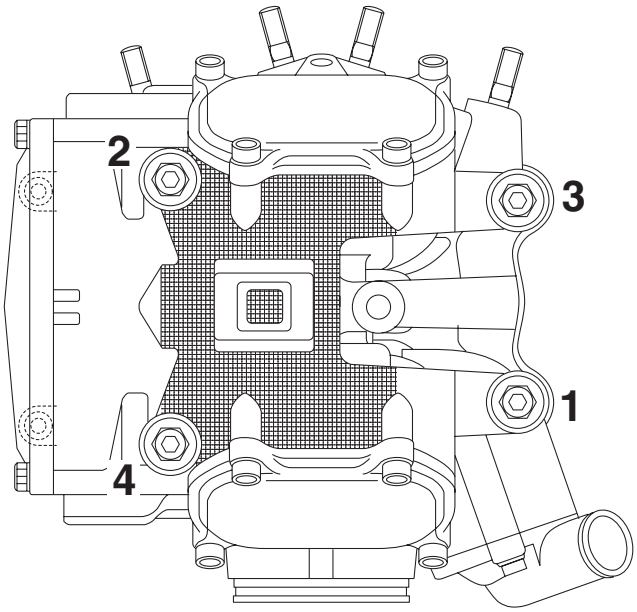

http://manuals.magnamaniac.com

CHASSIS TIGHTENING TORQUES

Part to be tightened	Thread size	Tightening torque			Remarks
		Nm	m · kg	ft · lb	
Engine mounting:					
Engine upper bracket and frame	M10	73	7.3	53	
Engine upper bracket and engine	M10	55	5.5	40	
Engine front bracket and frame	M10	73	7.3	53	
Engine front bracket and engine	M10	73	7.3	53	
Engine and frame	M10	73	7.3	53	
Radiator cap retainer	M6	7	0.7	5.1	
Coolant reservoir	M6	5	0.5	3.6	
Chain tensioner (upper and lower)	M8	23	2.3	17	
Pivot shaft and nut	M14	92	9.2	66	LS
Rear shock absorber and frame	M14	59	5.9	43	
Relay arm and frame	M14	59	5.9	43	LS
Relay arm and connecting arm	M14	59	5.9	43	LS
Swingarm and connecting arm	M14	59	5.9	43	LS
Relay arm and rear shock absorber	M10	42	4.2	30	LS
Chain cover and swingarm	M6	7	0.7	5.1	
Stabilizer (XT660X)	M6	7	0.7	5.1	
Chain protector and swingarm	M6	7	0.7	5.1	
Drive sprocket cover	M6	10	1.0	7.2	
Upper bracket pinch bolt	M8	23	2.3	17	
Lower handlebar holder and upper bracket	M10	32	3.2	23	
Steering stem nut	M22	130	13.0	94	
Lower ring nut (steering stem)	M25	—	—	—	See NOTE.
Upper handlebar holder and lower handlebar holder	M8	23	2.3	17	
Front brake master cylinder holder	M6	7	0.7	5.1	
Clutch lever holder	M5	7	0.7	5.1	
Front brake master cylinder and brake lever	M6	6	0.6	4.3	LS
Grip end	M6	7	0.7	5.1	
Front brake hose union bolt	M10	30	3.0	22	
Front mud guard (XT660R)	M6	7	0.7	5.1	
Front mud guard and front fork protector (XT660R)	M6	7	0.7	5.1	
Stabilizer and front mud guard (XT660X)	M6	7	0.7	5.1	
Stabilizer, front mud guard, and front fork (XT660R)	M8	16	1.6	11	
Front brake hose holder and front fork	M6	10	1.0	7.2	
Upper bracket pinch bolt	M8	23	2.3	17	
Lower bracket pinch bolt	M8	23	2.3	17	
Cap bolt	M50	18	1.8	13	
Damper rod bolt	M12	30	3.0	22	

http://manuals.magnamaniac.com

Part to be tightened	Thread size	Tightening torque			Remarks
		Nm	m · kg	ft · lb	
Fuel tank and frame	M6	10	1.0	7.2	
Fuel pump and fuel tank	M5	4	0.4	2.9	
Rectifier/regulator and air filter case	M6	7	0.7	5.1	
ECU and air filter case	M6	7	0.7	5.1	
Horn bracket and frame	M6	10	1.0	7.2	
Side panels (left and right) and frame	M6	7	0.7	5.1	
Grab bar, rear cover and frame	M8	23	2.3	17	
Rear mud guard and frame	M6	7	0.7	5.1	
Tail/brake light and rear mud guard	M6	4	0.4	2.9	
Rear mud guard and rear fender	M6	7	0.7	5.1	
Rear fender and frame	M6	7	0.7	5.1	
Front fender and frame	M6	7	0.7	5.1	
Front fork protector and front cowling assembly	M6	8	0.8	5.8	
Front brake disc and wheel	M8	23	2.3	17	
Front wheel axle	M16	59	5.9	43	
Front wheel axle pinch bolt	M8	18	1.8	13	
Front brake caliper	M10	40	4.0	29	
Brake caliper bleed screw	M10	14	1.4	10	
Rear wheel axle nut	M16	105	10.5	75	
Chain drive adjusting locknut	M8	16	1.6	11	
Rear wheel sprocket and hub	M10	69	6.9	50	
Rear brake disc and wheel	M6	13	1.3	9.4	
Left side heel plate	M6	10	1.0	7.2	
Right side heel plate and rear brake master cylinder	M8	23	2.3	17	
Brake pedal position locknut	M8	18	1.8	13	
Footrest bracket and frame (right)	M10	48	4.8	35	
Rear brake hose holder and swingarm	M6	7	0.7	5.1	
Rear brake hose union bolt	M10	30	3.0	22	
Rear brake caliper protector (front side)	M6	7	0.7	5.1	
Rear brake caliper protector (rear side)	M6	4	0.4	2.9	

NOTE:

1. First, tighten the lower ring nut approximately 43 Nm (4.3 m · kg, 31 ft · lb) by using the torque wrench, then loosen the ring nut completely.
2. Retighten the lower ring nut 7 Nm (0.7 m · kg, 5.1 ft · lb) by using the torque wrench.

http://manuals.magnamaniac.com

EAS00031
LUBRICATION POINTS AND LUBRICANT TYPES
ENGINE

Lubrication Point	Symbol
Oil seal lips	LS
O-rings	LS
Bearings	E
Cylinder head tightening bolts	E
Cylinder tightening bolts	E
Crankshaft pin	E
Timing chain sprocket inner surface	M
Connecting rod big end thrust surface	E
Piston pin	E
Piston and ring groove	E
Balancer weight tightening nut	E
A.C. magnet rotor tightening nut inner surface	E
Valve stems (intake and exhaust)	M
Valve stem ends (intake and exhaust)	M
Rocker arm shaft	E
Camshaft lobes	M
Decompressor lever pin	E
Decompressor lever spring	E
Water pump impeller shaft	E
Oil pump rotors (inner and outer)	E
Oil pump shaft	E
Torque limiter	E
Starter clutch idle gear thrust surface	E
Starter clutch idle gear inner surface	E
Starter clutch gear (inner and outer)	E
Starter clutch assembly	E
Primary drive gear tightening nut	M
Primary driven gear	E
Clutch boss tightening nut	E
Push rod	M
Transmission gears (wheel and pinion)	M
Main and drive axle	M
Shift forks	E
Shift drum	E
Shift shaft	E
Shift shaft spacer	E

http://manuals.magnamaniac.com

Lubrication Point	Symbol
Crankcase mating surface	Yamaha bond No.1215
A.C. magnet lead grommet (A.C. magneto cover)	Yamaha bond No.1215
Oil seal holder tightening bolt	Yamaha bond No.1215
Oil delivery hose 2 tightening bolt	Yamaha bond No.1215

http://manuals.magnamaniac.com

EAS00032
CHASSIS

Lubrication Point	Symbol
Front wheel oil seal lips (left and right)	LS
Rear wheel oil seal lips (left and right)	LS
Rear wheel drive hub contact surface	LS
Rear arm pivot shaft outer surface and bush outer surface and oil seal lip	LS
Dust cover thrust surface	LS
Relay arm and rear shock absorber mounting bolt outer surface	LS
Relay arm and rear shock absorber oil seal lips	LS
Relay arm and swingarm mounting bolt outer surface	LS
Relay arm and swingarm oil seal lips	LS
Relay arm and connecting arm mounting bolt outer surface	LS
Relay arm and connecting arm oil seal lips	LS
Brake pedal outer surface	LS
Rear brake master cylinder pin outer surface	LS
Steering head pipe bearings (upper and lower)	LS
Steering head pipe bearing races (upper and lower)	LS
Tube guide (throttle grip) inner surface	LS
Clutch lever pivot bolt outer surface	LS
Sidestand sliding surface and collar outer surface	LS
Footrest pivoting point	LS
Footrest spring end	LS
Chain tensioner collar (upper and lower) outer surface	LS
Rear axle shaft outer surface	LS
Passenger footrest pivoting point	LS

http://manuals.magnamaniac.com

EAS00033
COOLING SYSTEM DIAGRAMS

① Water jacket joint
② Water pump outlet hose
③ Water pump outlet pipe
④ Water pump

A From the radiator
B To the cylinder

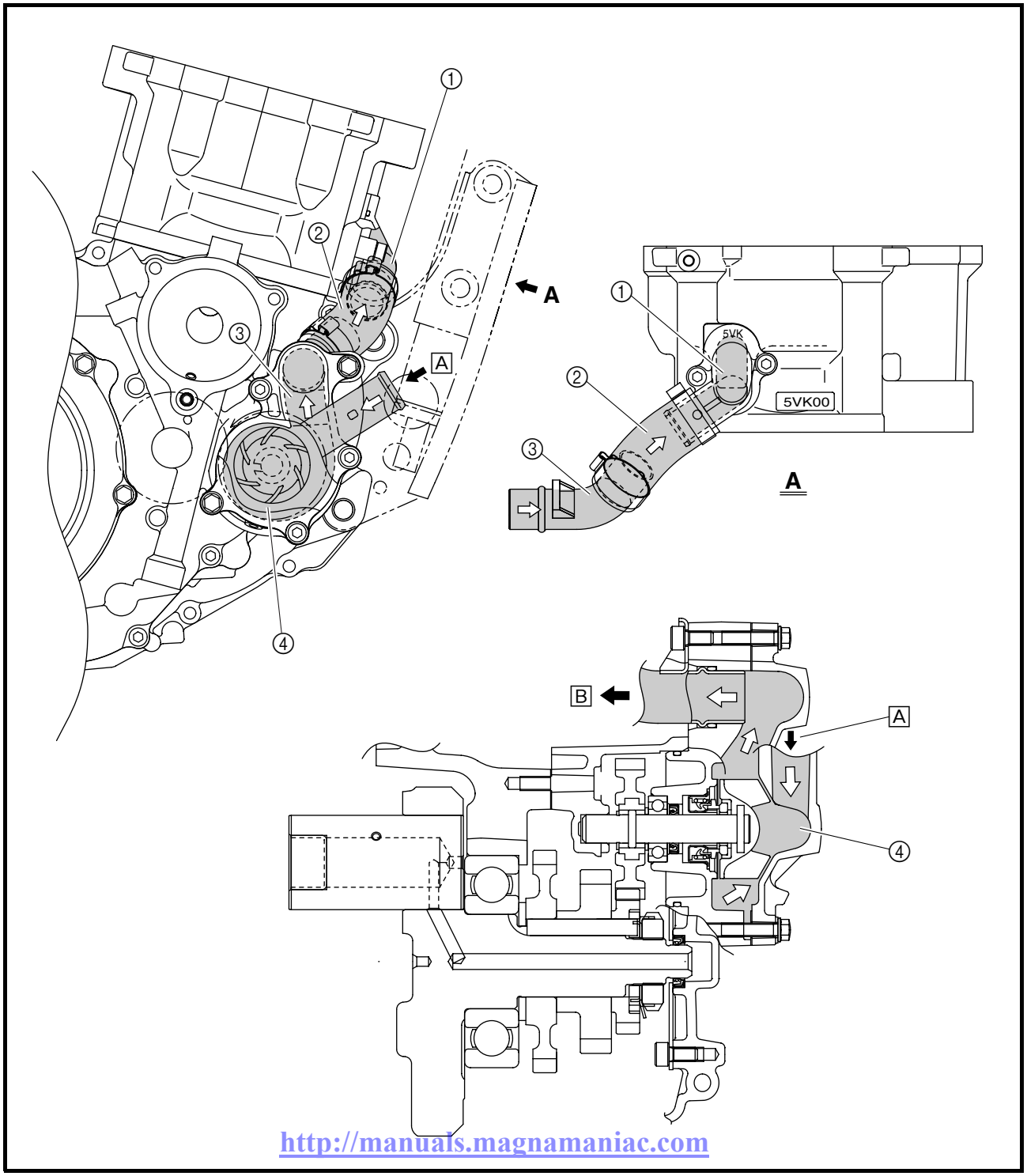

http://manuals.magnamaniac.com

① Fast idle plunger outlet hose
② Coolant reservoir breather hose
③ Coolant reservoir hose
④ Radiator cap
⑤ Radiator
⑥ Coolant reservoir cap
⑦ Coolant reservoir
⑧ Radiator outlet hose
⑨ Water pump
⑩ Radiator fan
⑪ Radiator inlet hose

[A] From the fast idle plunger
[B] To the cylinder
[C] From the thermostat

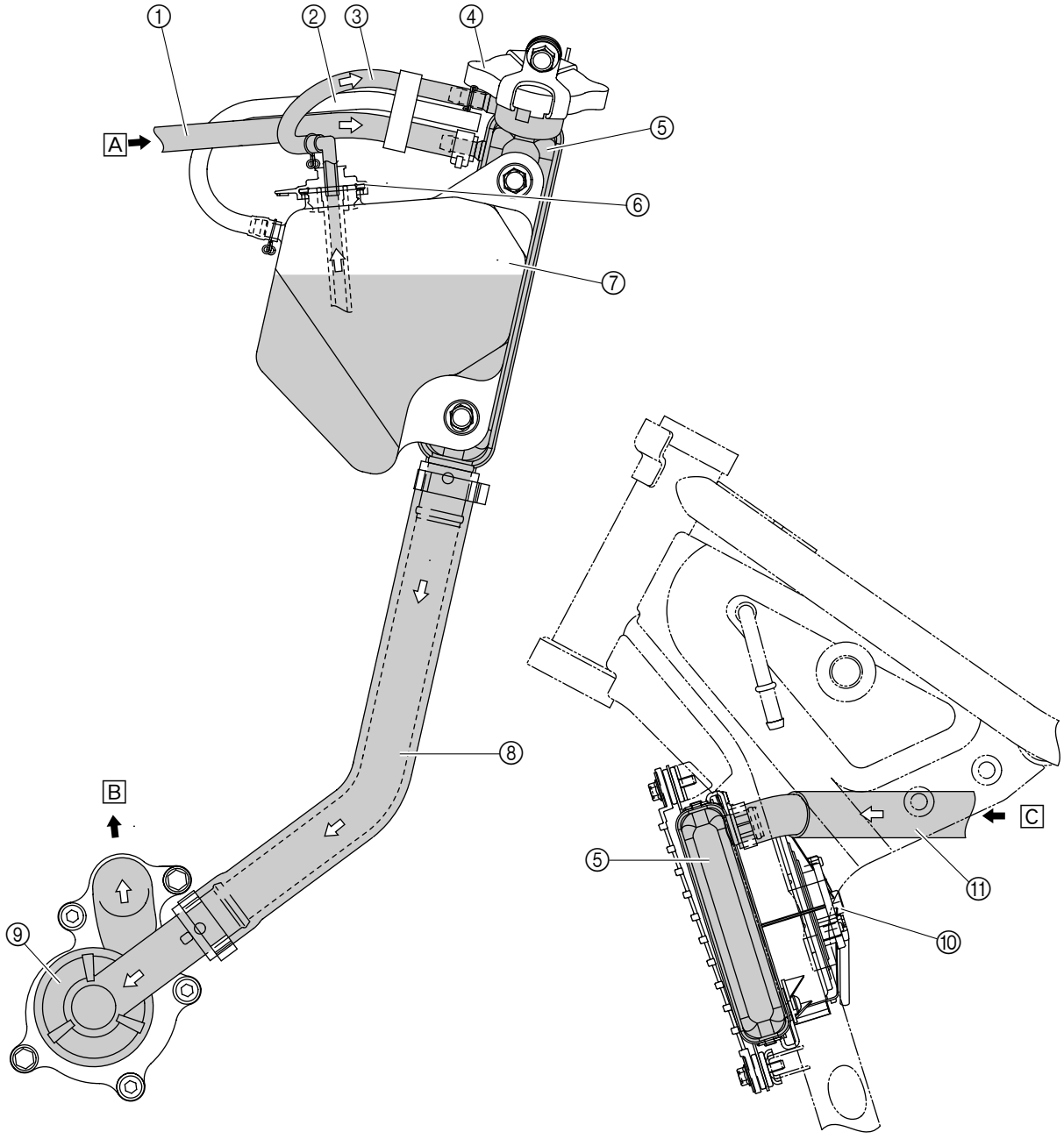

http://manuals.magnamaniac.com

LUBRICATION CHART

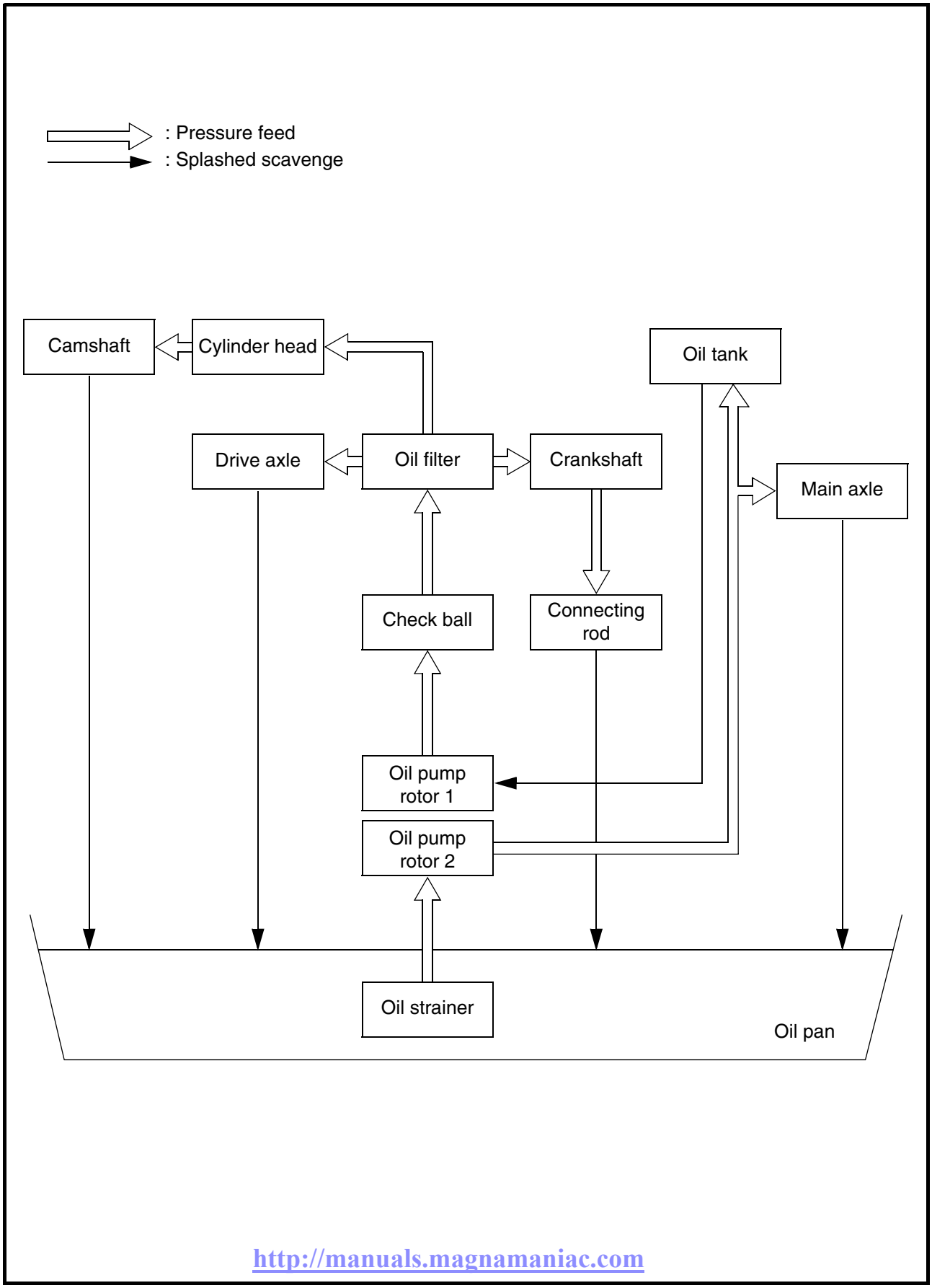

http://manuals.magnamaniac.com

EAS00034
LUBRICATION DIAGRAMS

① Oil delivery hose 2
② Oil strainer
③ Oil delivery hose 1

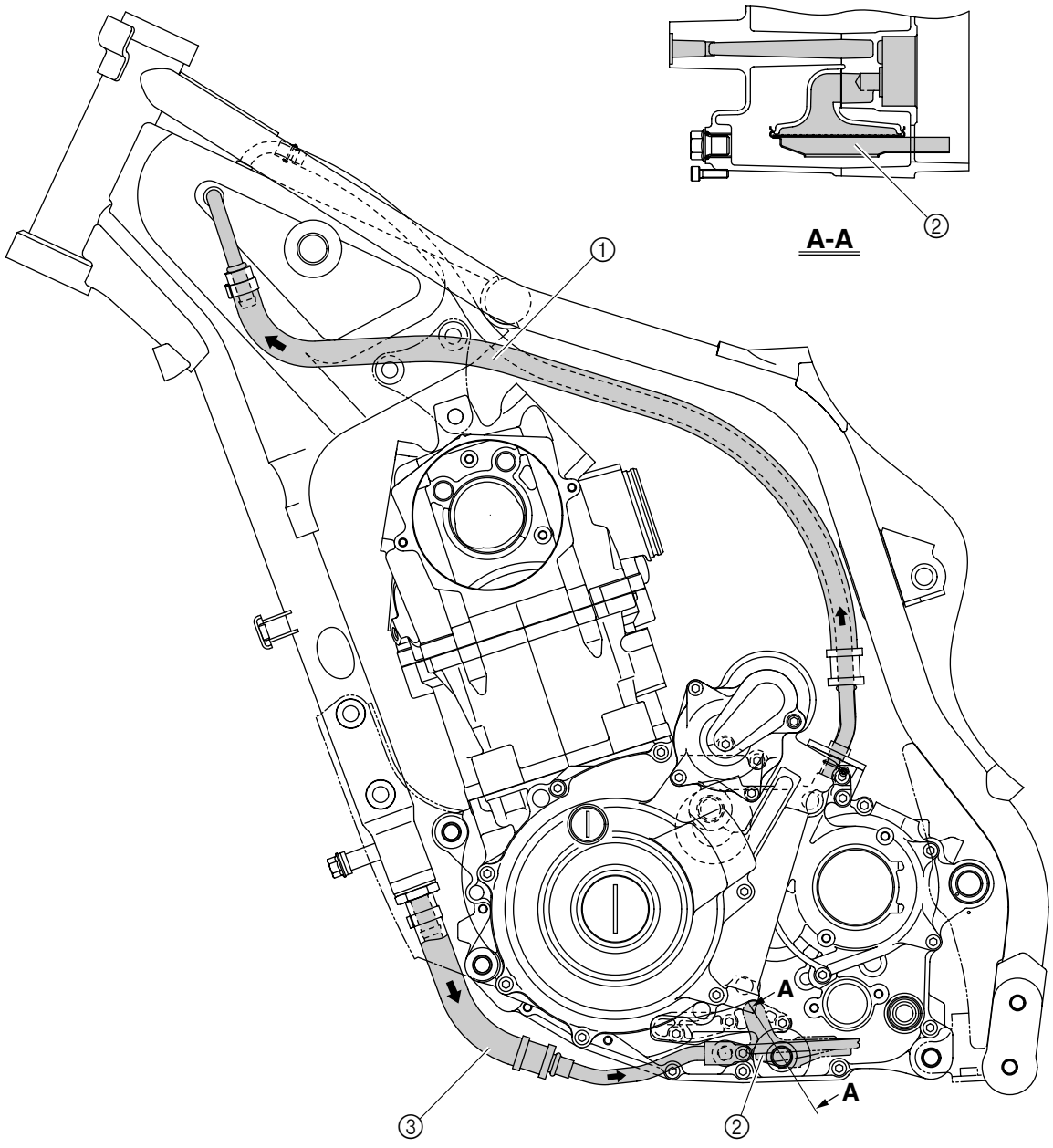

http://manuals.magnamaniac.com

① Oil delivery pipe 2
② Oil delivery pipe 1
③ Oil filter
④ Oil pump

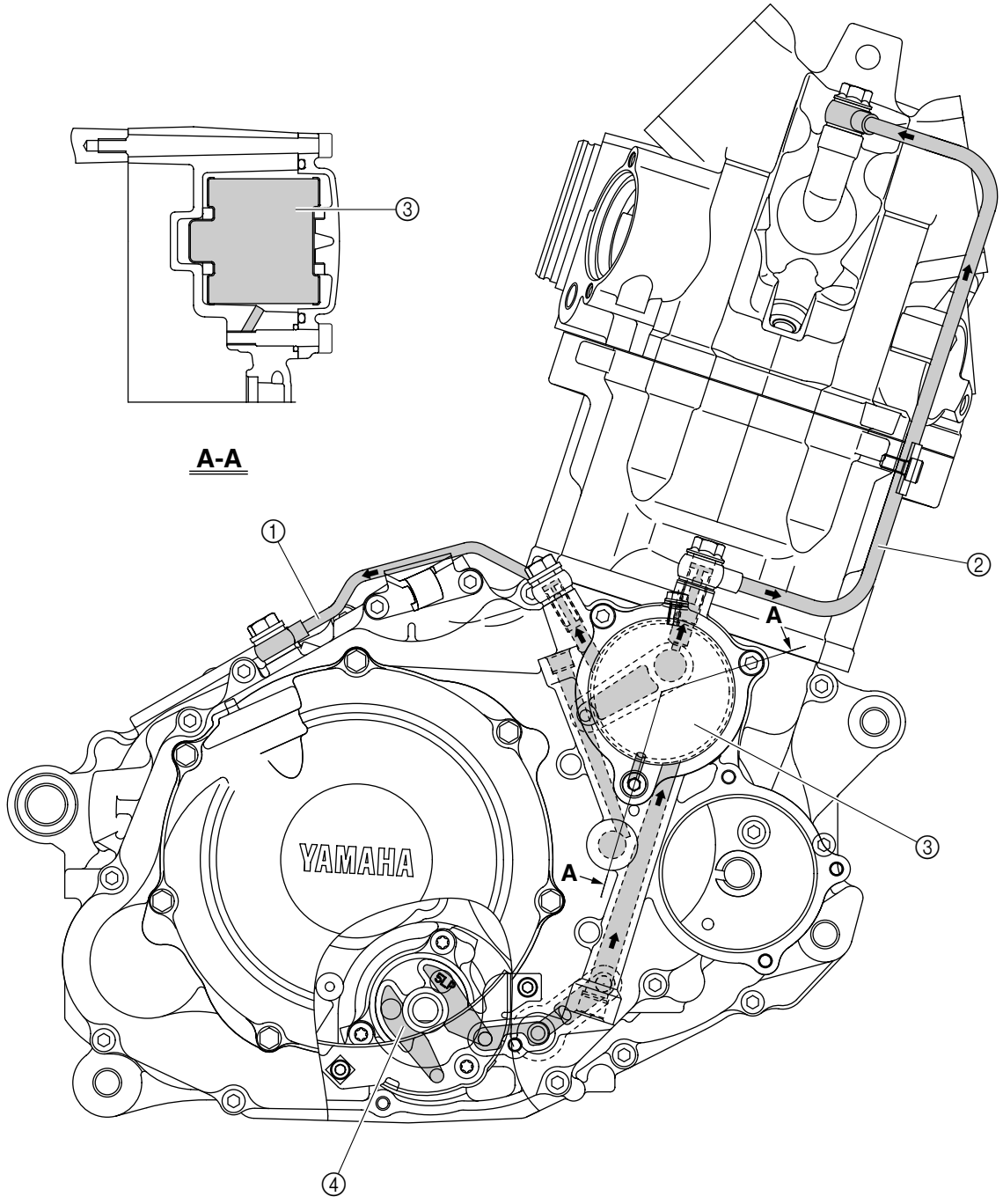

http://manuals.magnamaniac.com

① Oil delivery hose 2
② Oil delivery pipe 2
③ Oil filter
④ Oil pump rotor 1
⑤ Oil pump rotor 2
⑥ Main axle
⑦ Oil delivery pipe 3

Ⓐ To oil tank

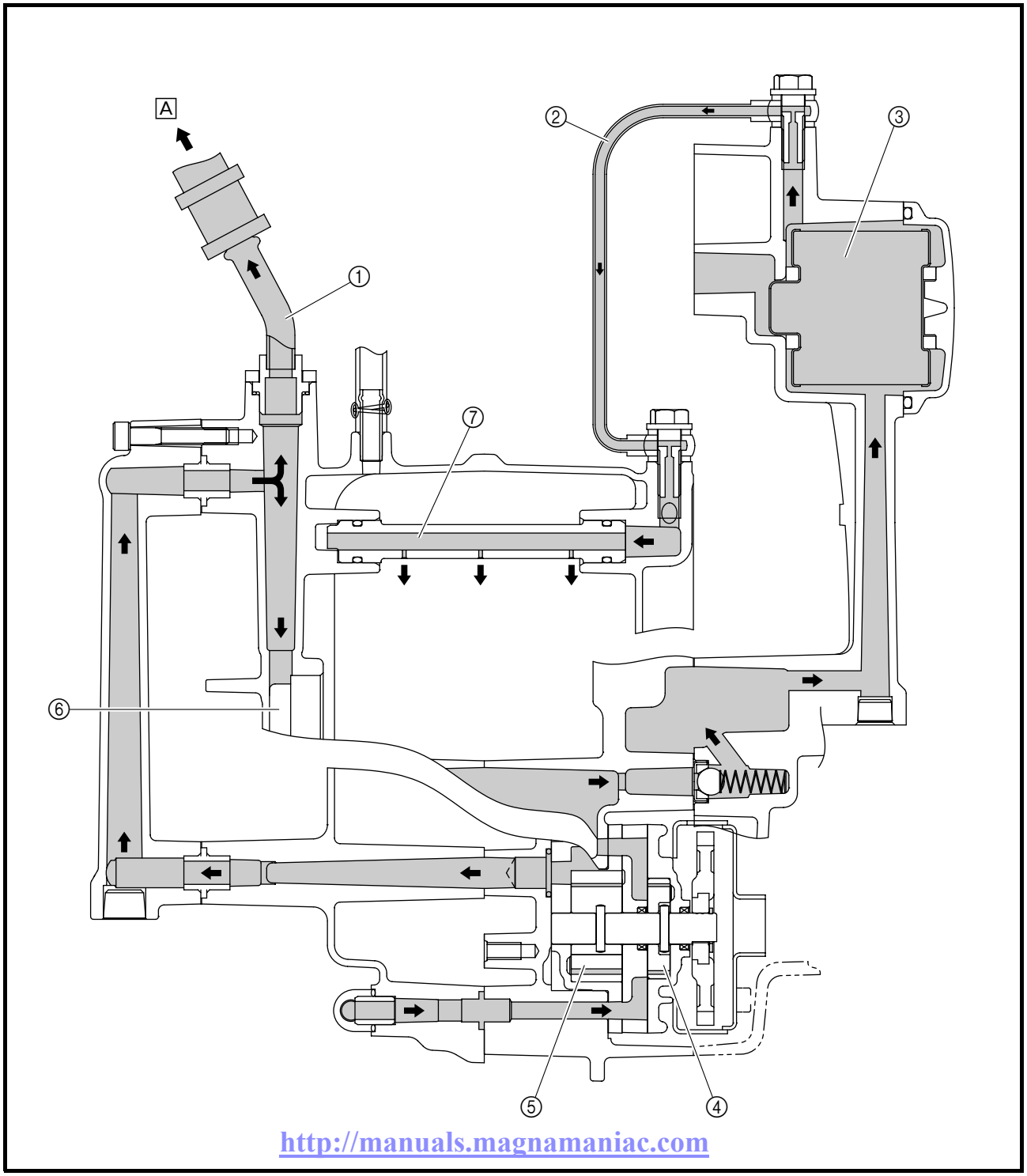

http://manuals.magnamaniac.com

① Camshaft
② Oil delivery pipe 1
③ Oil filter
④ Main axle
⑤ Drive axle
⑥ Crankshaft

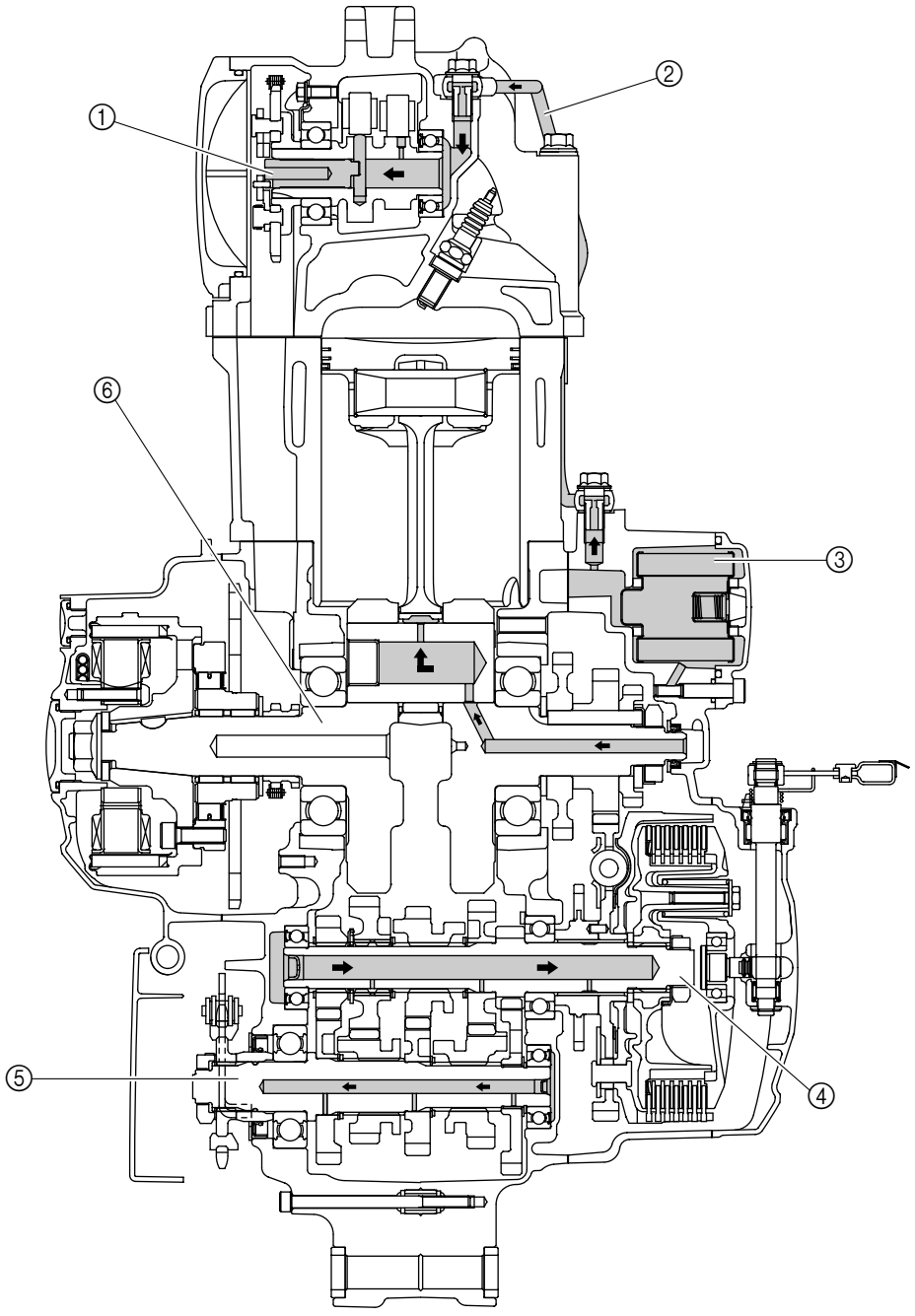

http://manuals.magnamaniac.com

EAS00035
CABLE ROUTING

① Left handlebar switch lead
② Clutch switch lead
③ Clutch cable
④ Front brake light switch lead
⑤ Right handlebar switch lead
⑥ Throttle cable
⑦ Headlight lead
⑧ Meter assembly lead
⑨ Main switch lead
⑩ Immobilizer unit lead

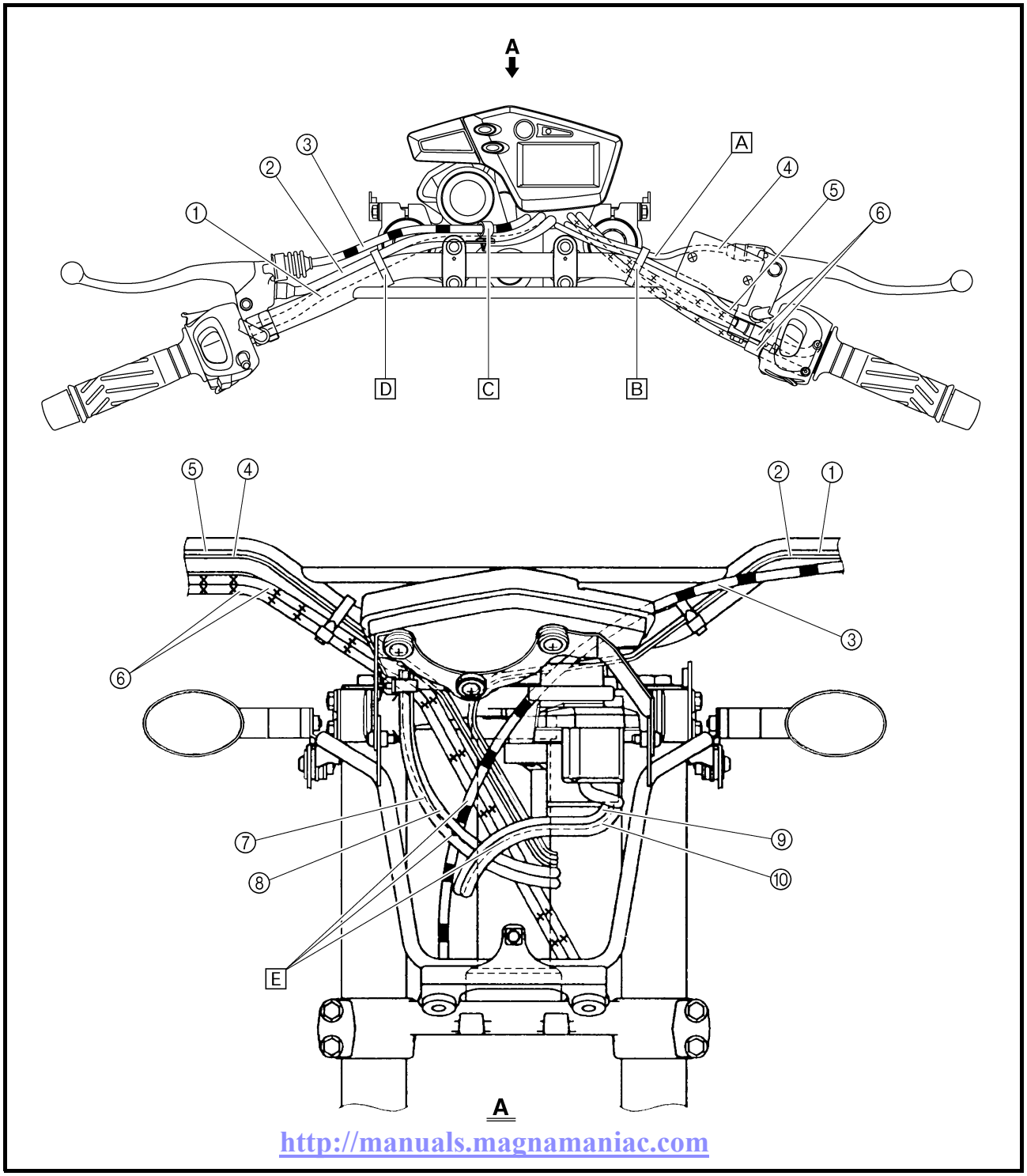

http://manuals.magnamaniac.com

[A] When fastening the front brake light switch lead, leave some slack in the lead at the area shown.
[B] Fasten the right handlebar switch lead, front brake light switch lead, and throttle cables with a plastic band. Face the end of the plastic band forward.
[C] Fasten the clutch cable with a cable holder.
[D] Fasten the left handlebar switch lead and clutch switch lead with a plastic band. Face the end of the plastic band forward.
[E] Route the throttle cables, left handlebar switch lead, right handlebar switch lead, front brake light switch lead, and clutch switch lead in front of the steering column, then the clutch cable, then the headlight lead and meter assembly lead, and finally the main switch lead and immobilizer unit lead.

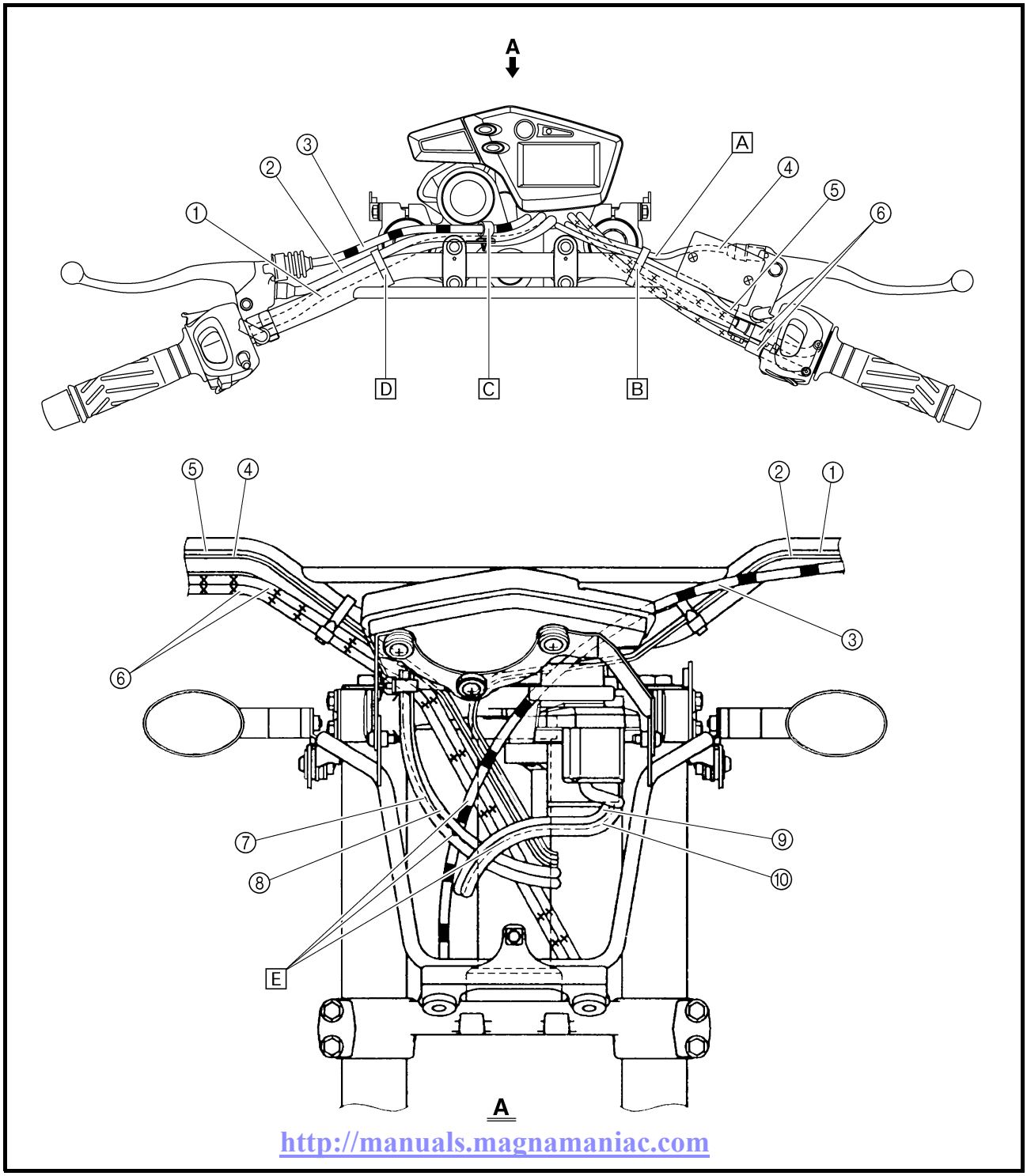

http://manuals.magnamaniac.com

① Front turn signal light lead (right)
② Meter assembly lead
③ Auxiliary light lead
④ Front turn signal light lead (left)
⑤ Headlight lead
⑥ Sub-wire harness

A Fasten the sub-wire harness and meter assembly lead with a plastic band. Fasten the sub-wire harness at the white tape. Face the end of the plastic band forward.
B Make sure that there is no slack in the meter assembly lead between the meter assembly and the plastic band. The rubber boot on the meter assembly can be bent as shown.
C Place the slack of the left and right front turn signal light leads between the headlight assembly and front cowling assembly.

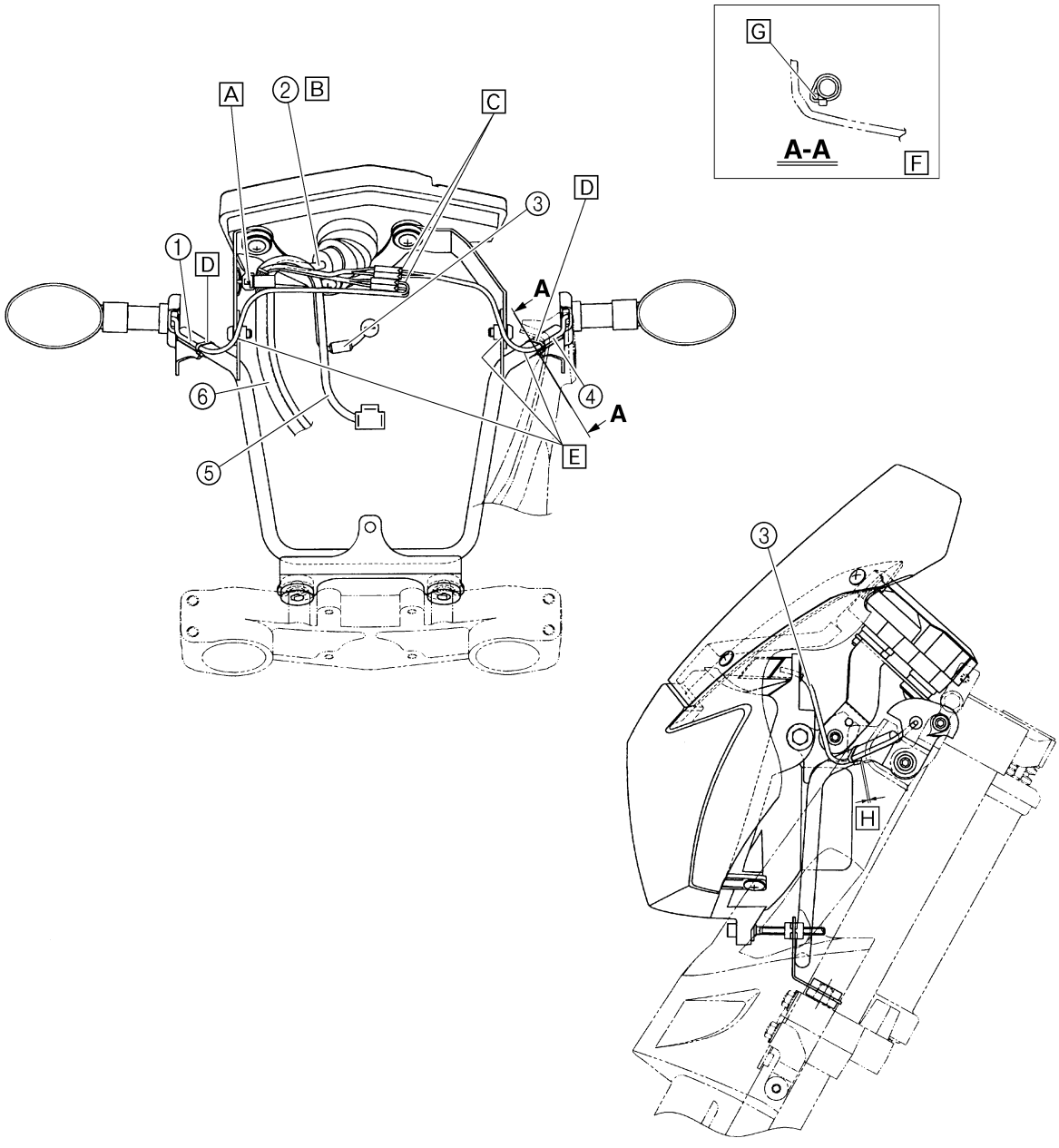

http://manuals.magnamaniac.com

[D] Fasten the left and right front turn signal light leads to the headlight stay with a plastic locking tie.
[E] Pass the left and right front turn signal light leads in front of the headlight stay.
[F] Only the left side is shown in this illustration. Route the right front turn signal light lead in the same way.
[G] Pass the left and right front turn signal light leads between the headlight stay and front fork protector.
[H] 0 ~ 5 mm (0 ~ 0.20 in) for both left and right sides

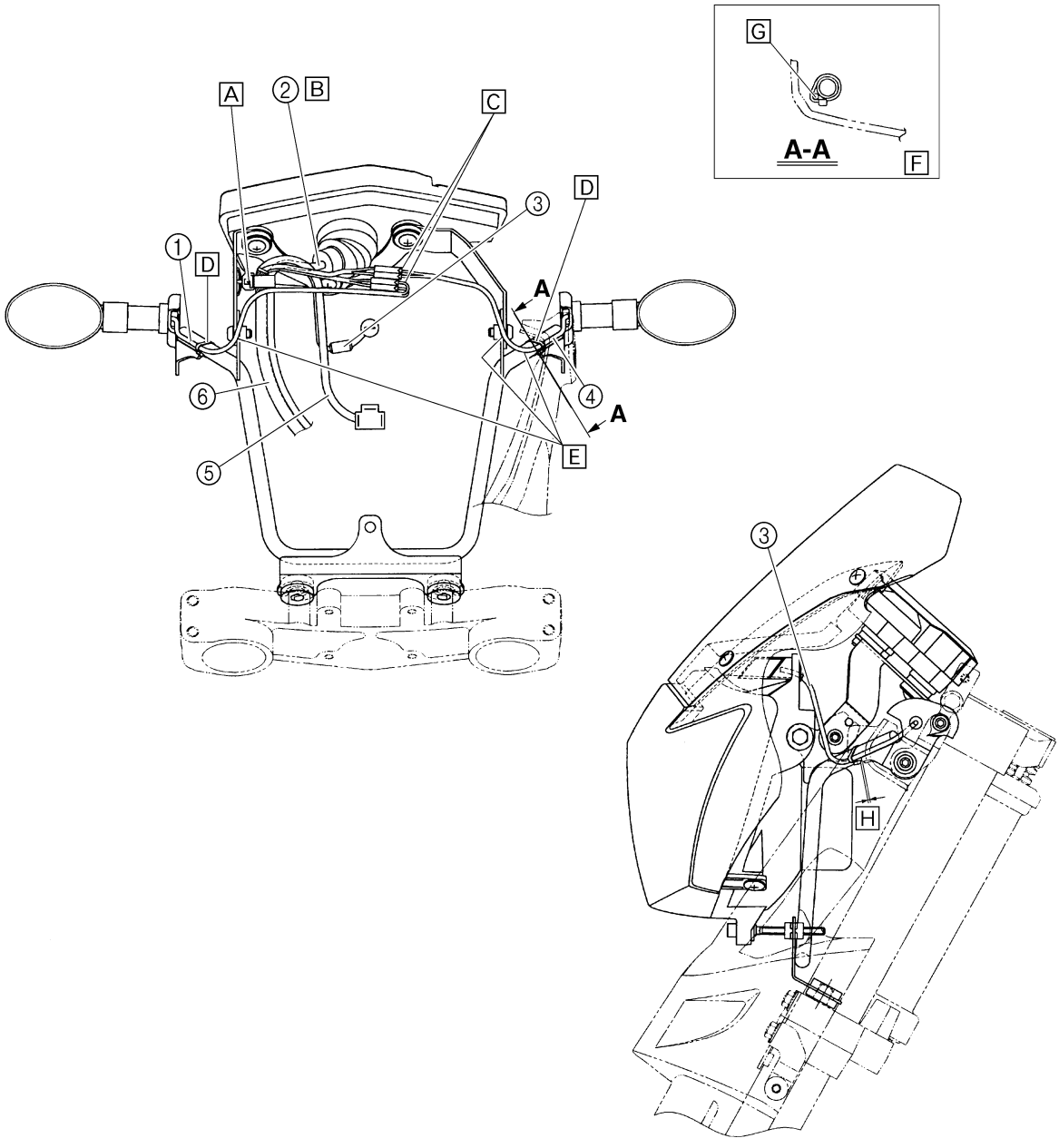

http://manuals.magnamaniac.com

① Ignition coil lead
② Main switch coupler
③ Immobilizer unit coupler
④ Air induction system lead
⑤ Horn lead
⑥ Horn
⑦ Ignition coil
⑧ Spark plug lead
⑨ Clutch cable
⑩ Oil delivery pipe 1
⑪ Wire harness
⑫ Fast idle plunger outlet hose

A Fasten the fast idle plunger outlet hose and ignition coil leads with a hose holder. Install the hose holder with its fastener facing down.
B Fasten the wire harness, main switch lead, and immobilizer unit lead to the frame with a plastic band.

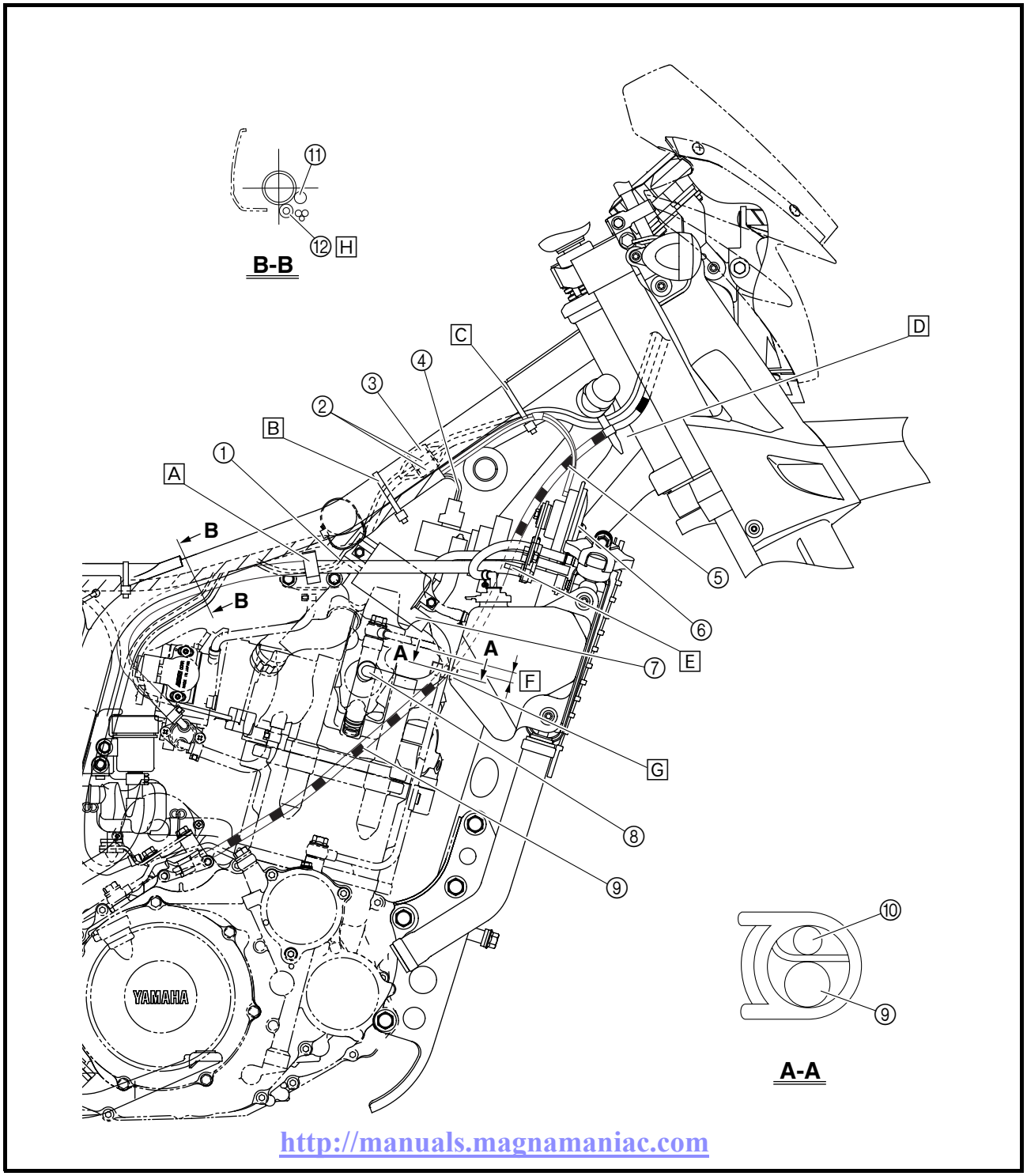

http://manuals.magnamaniac.com

[C] Fasten the main switch lead, immobilizer unit lead, and horn switch lead with a plastic locking tie. To fasten the leads, connect the couplers, and then turn the handlebar completely to the left.
[D] Fasten the main switch lead, immobilizer unit lead, and clutch cable with a plastic band under the engine oil filler cap. To fasten the leads and cable, connect the couplers, and then turn the handlebar completely to the left.
[E] Fasten the clutch cable to the horn bracket with a cable holder.
[F] Install the cable holder as high as possible.
[G] Fasten the clutch cable and oil delivery pipe 1 with a cable holder.
[H] Route the fast idle plunger outlet hose to the inside of the line shown in the illustration so that it is not pinched between the frame and right side panel.

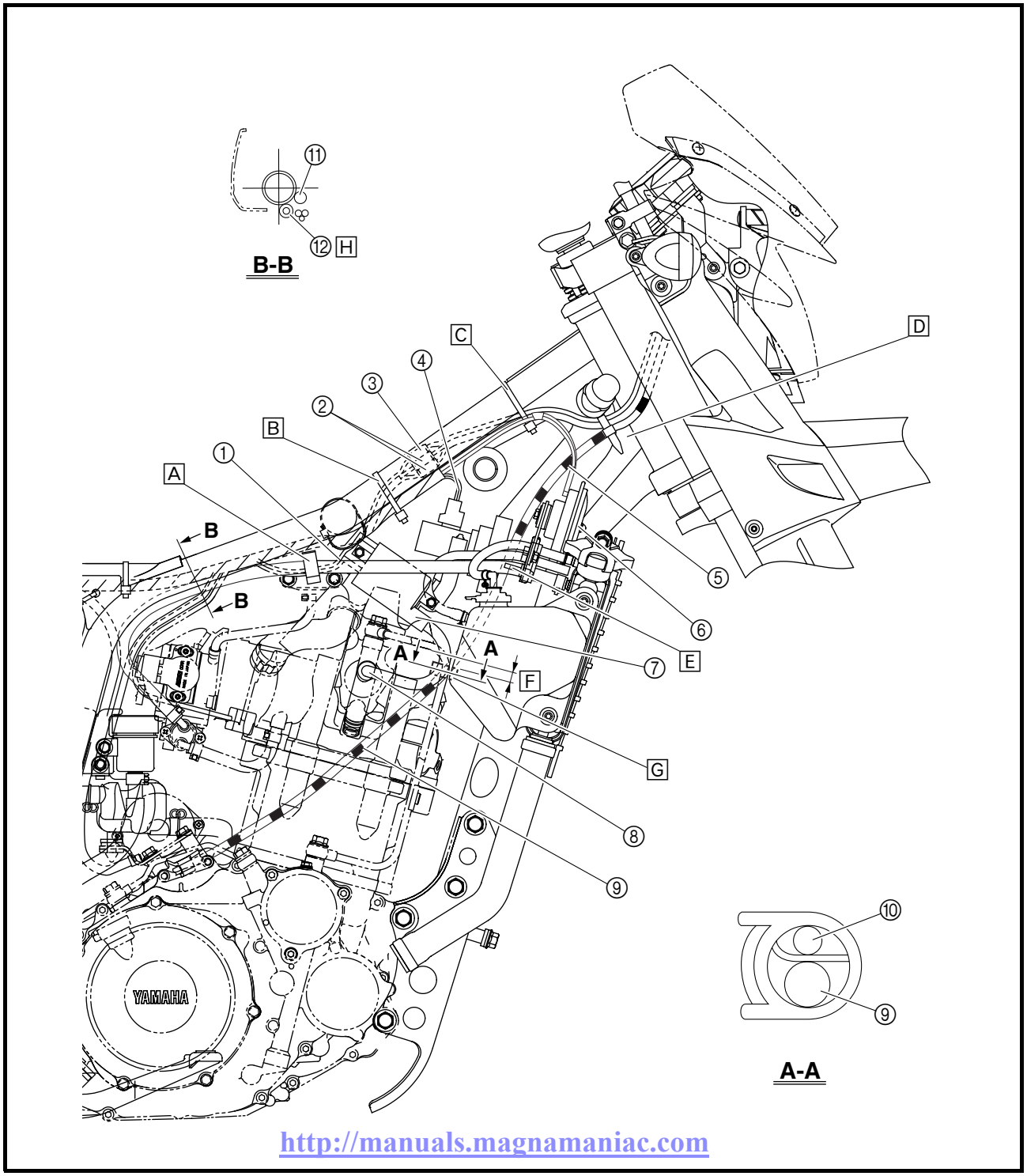

http://manuals.magnamaniac.com

① Rear brake light switch lead
② Negative battery lead
③ Lean angle cut-off switch lead
④ Throttle position sensor lead
⑤ Coolant temperature sensor lead
⑥ Turn signal/hazard relay
⑦ Headlight relay
⑧ Radiator fan motor relay
⑨ Relay unit

A Fasten the wire harness, negative battery lead, and rear brake light switch lead to the frame with a plastic locking tie.
B Fasten the rear brake light switch lead to the frame with a plastic locking tie.
C Fasten the wire harness to the frame at the white tape with a plastic locking tie.
D Route the negative battery lead behind the lean angle cut-off switch bracket.
E Route the rear brake light switch lead between the air filter case and the frame.

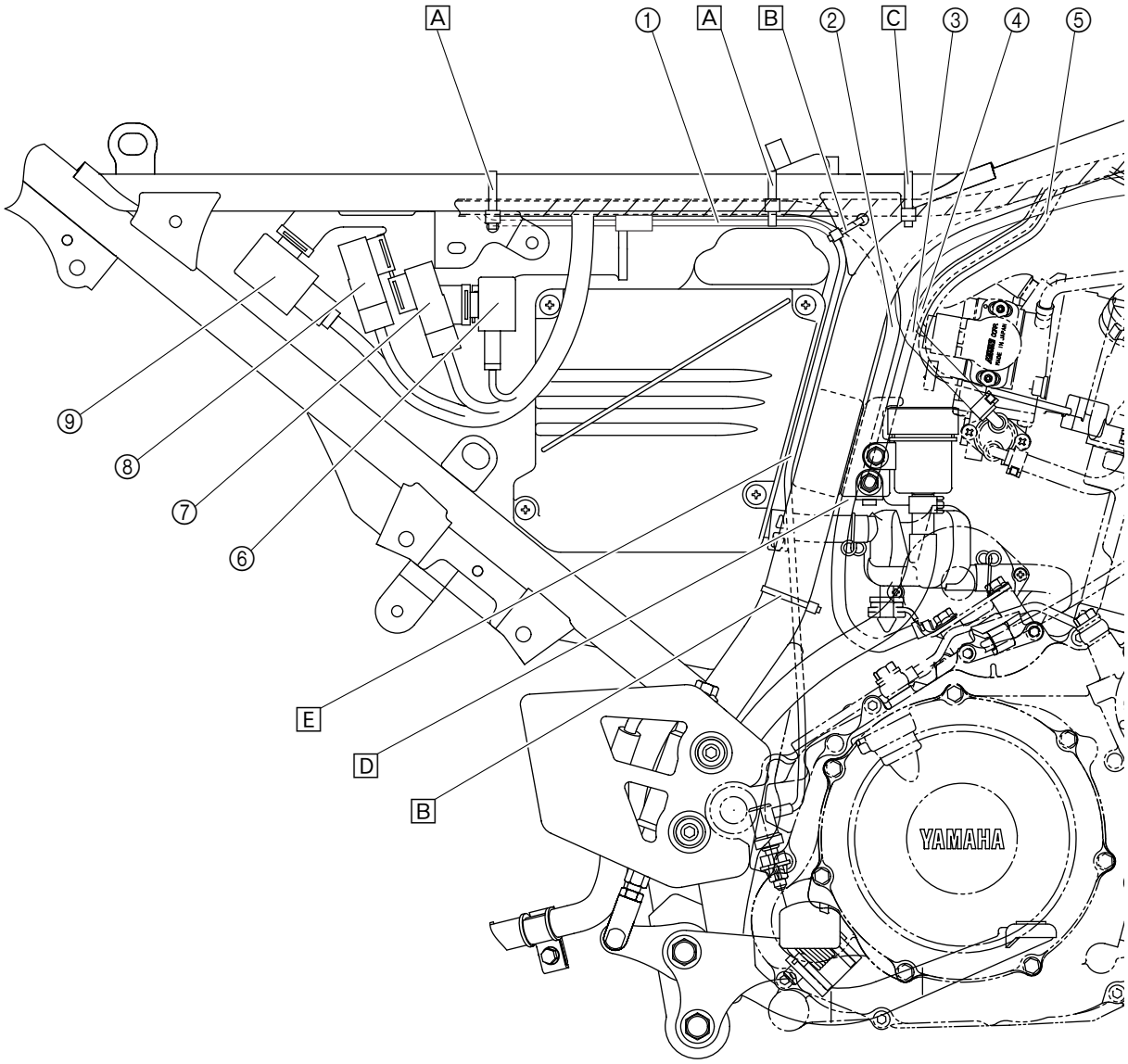

http://manuals.magnamaniac.com

① Neutral switch connector
② Crankshaft position sensor coupler
③ A.C. magneto coupler
④ Speed sensor lead
⑤ Intake air temperature sensor lead
⑥ ECU lead
⑦ Starter motor lead
⑧ Sidestand switch lead
⑨ Speed sensor
⑩ A.C. magneto lead
⑪ Oil tank breather hose
⑫ Oil delivery hose 2
⑬ Radiator fan motor lead
⑭ Throttle cable
⑮ Headlight lead
⑯ Meter assembly lead
⑰ Left handlebar switch lead
⑱ Right handlebar switch lead
⑲ Front brake light switch lead
⑳ Clutch switch lead
㉑ Immobilizer unit lead
㉒ Clutch cable
㉓ Main switch lead
㉔ Air-filter-to-air-cut-off-valve hose
㉕ Wire harness

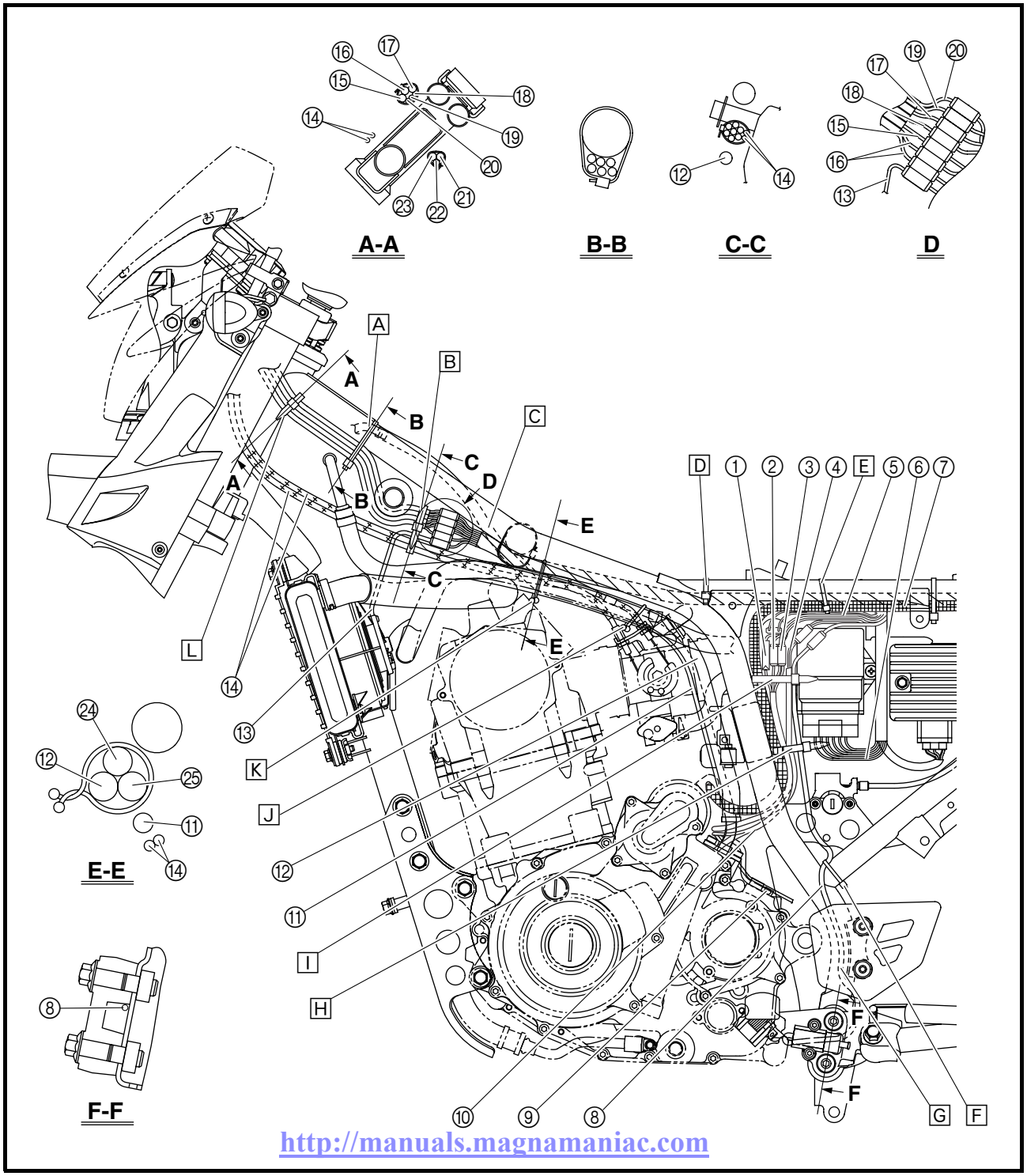

http://manuals.magnamaniac.com

[A] Fasten the left handlebar switch lead, right handlebar switch lead, headlight lead, meter assembly lead, front brake light switch lead, and clutch switch lead to the frame with a plastic locking tie. To fasten the leads, connect the couplers, and then turn the handlebar completely to the right.

[B] Fasten the left handlebar switch lead, right handlebar switch lead, headlight lead, meter assembly lead, front brake light switch lead, clutch switch lead, radiator fan motor lead, and throttle cables with a plastic locking tie. To fasten the leads and cables, connect the couplers, and then turn the handlebar completely to the right.

[C] Route the oil tank breather hose on the outside of the throttle cables.

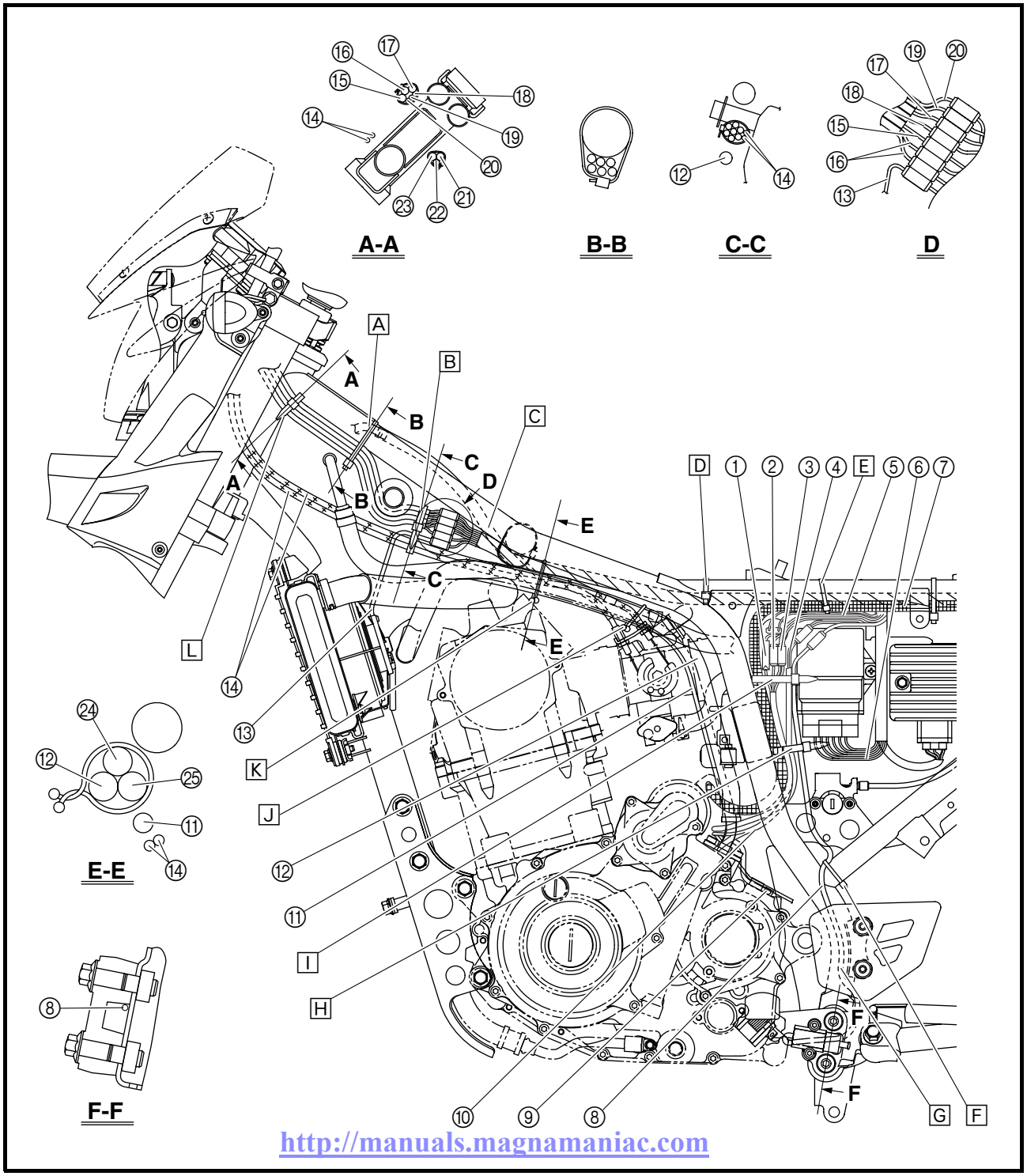

http://manuals.magnamaniac.com

[D] Fasten the wire harness to the frame at the white tape with a plastic locking tie.
[E] Fasten the starter motor lead to the frame with a plastic locking tie.
[F] Fasten the sidestand switch lead to the frame with a plastic locking tie.
[G] Route the sidestand switch lead at the front end of the left side heel plate.
[H] Fasten the neutral switch lead, crankshaft position sensor lead, sidestand switch lead, speed sensor lead, starter motor lead, and A.C. magneto lead with a plastic band.
[I] Fasten the neutral switch lead, crankshaft position sensor lead, sidestand switch lead, speed sensor lead, and starter motor lead with a plastic band.
[J] Fasten the air-filter-to-air-cut-off-valve hose, oil tank breather hose, and oil delivery hose 2 with a plastic clamp.

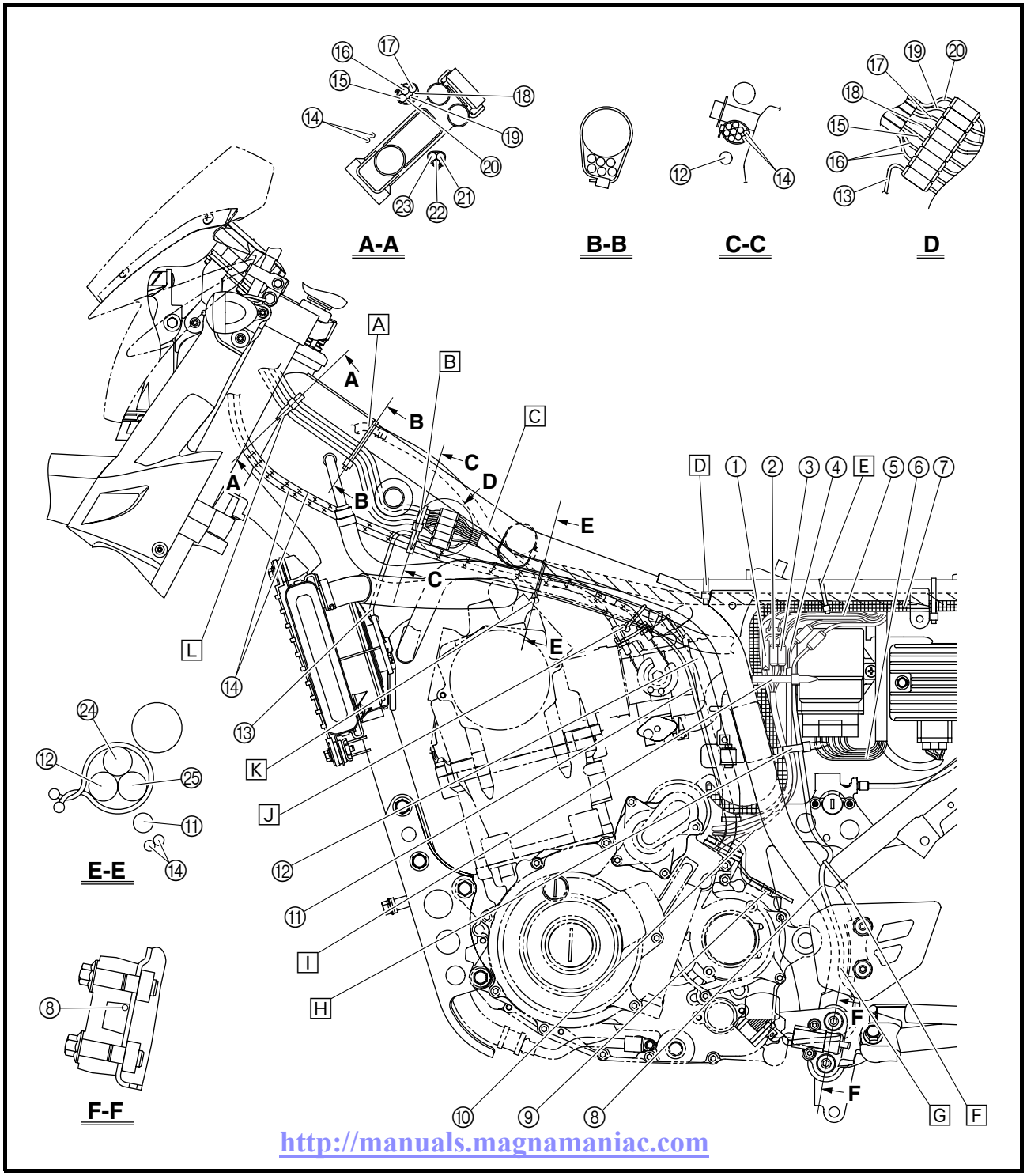

http://manuals.magnamaniac.com

K Fasten the wire harness, air-filter-to-air-cut-off-valve hose, and oil delivery hose 2 with a plastic clamp.
L Fasten the left handlebar switch lead, right handlebar switch lead, headlight lead, meter assembly lead, front brake light switch lead, and clutch switch lead with a plastic band.

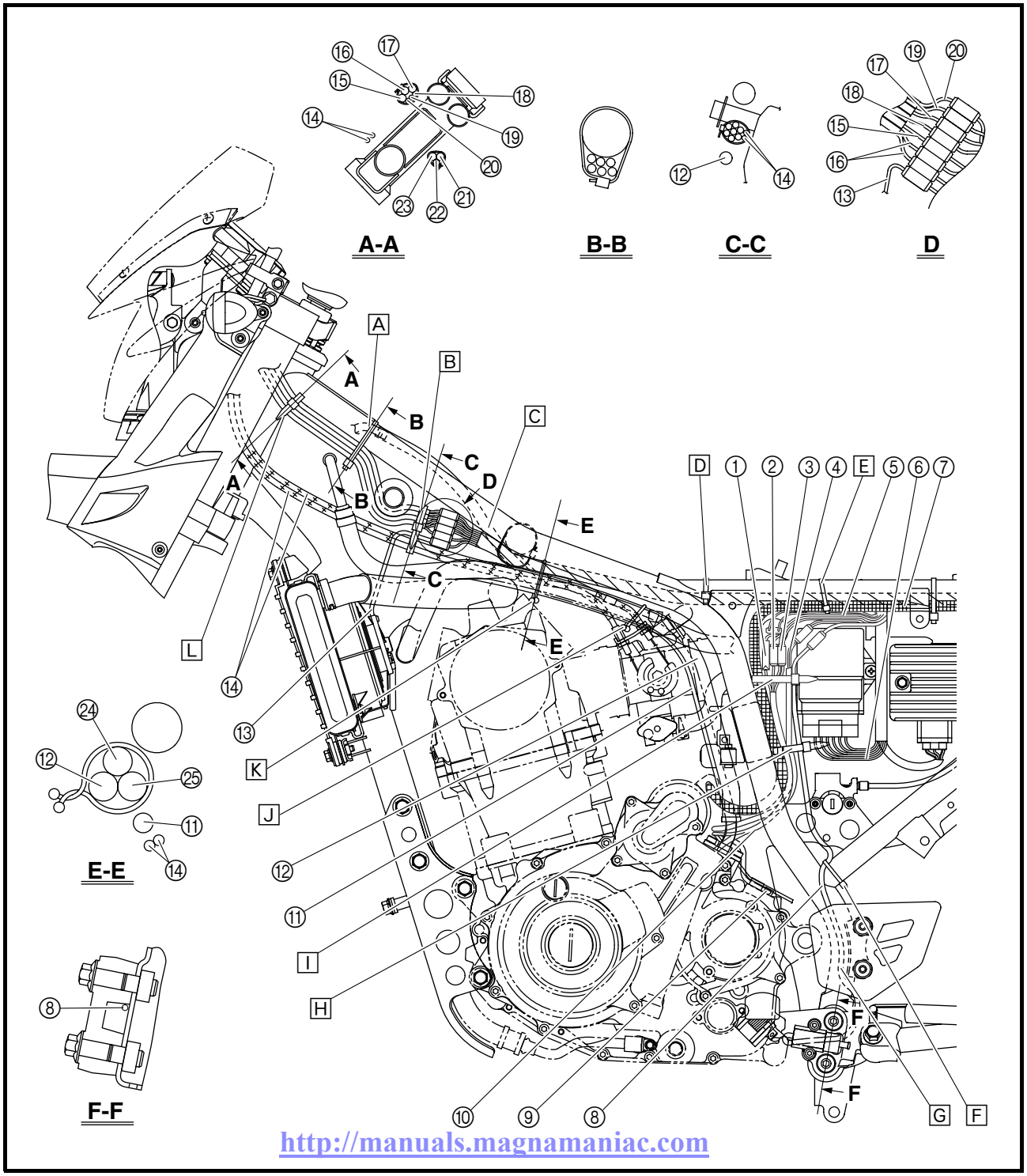

http://manuals.magnamaniac.com

① Starter motor lead
② Fuse box 1 lead
③ Fuse box 2 lead
④ Tail/brake light lead
⑤ Rear turn signal light lead
⑥ Seat lock cable
⑦ Positive battery lead
⑧ Starter relay lead
⑨ Rectifier/regulator lead

A Fasten the wire harness and starter motor lead to the frame with a plastic locking tie.
B 45°
C Fasten the wire harness to the frame with a plastic band.

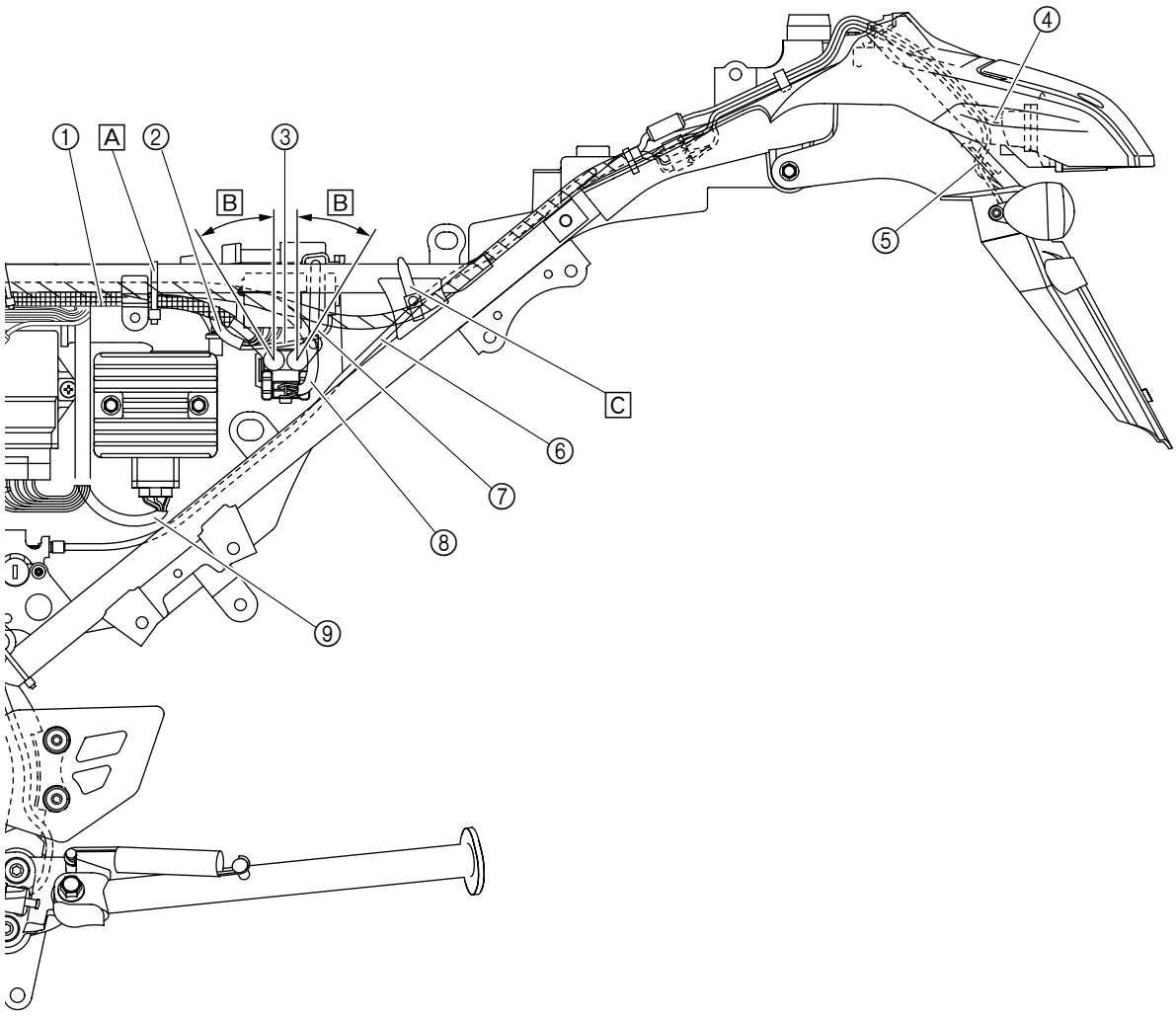

http://manuals.magnamaniac.com

① Immobilizer unit coupler
② Intake air temperature sensor
③ Fuel injector lead
④ Fuel pump lead
⑤ Fuel sender lead
⑥ Oil tank breather hose

A 0 ~ 10 mm (0 ~ 0.39 in)
B 30 ~ 40 mm (1.18 ~ 1.57 in)
C 5 ~ 15 mm (0.20 ~ 0.59 in)
D Fasten the wire harness to the frame with a plastic locking tie.
E To the fuel tank
F 0 ~ 5 mm (0 ~ 0.20 in)

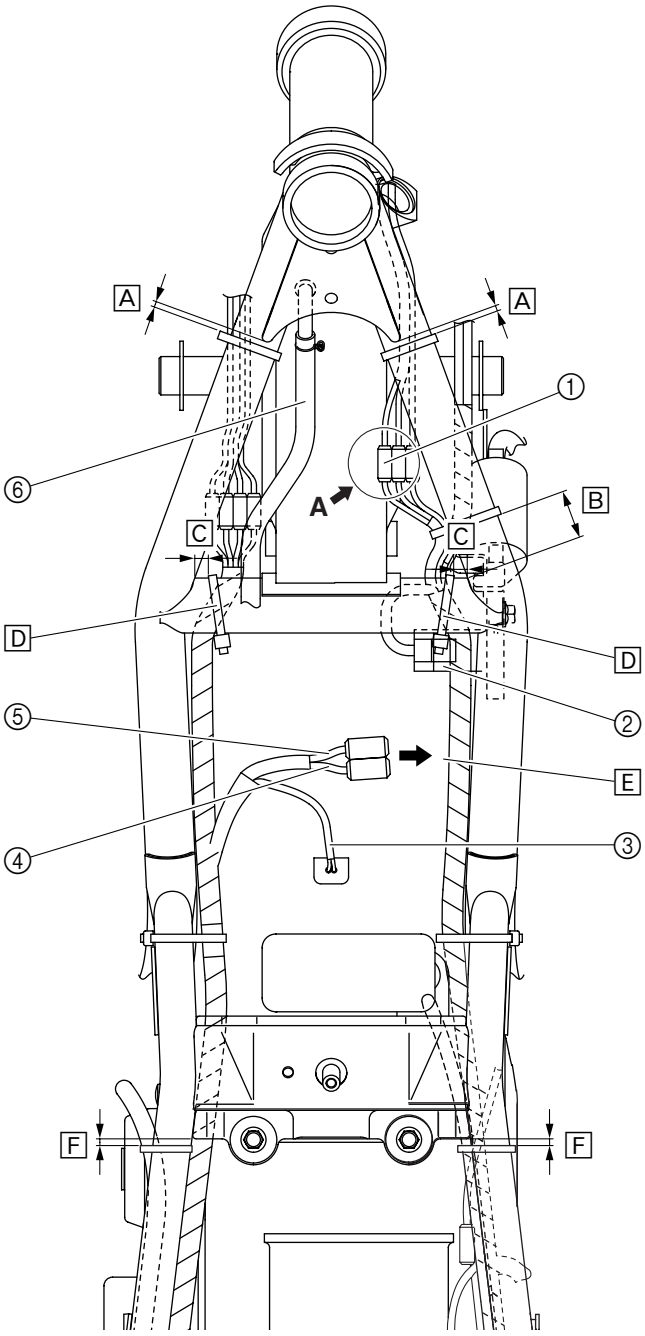

For F, GB

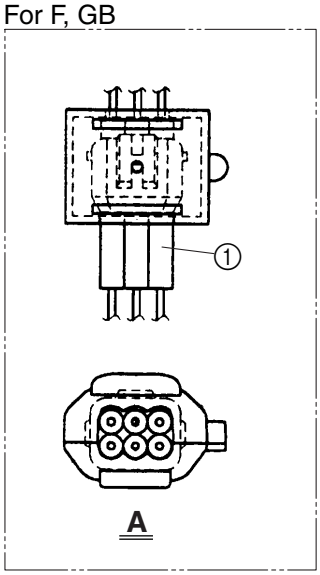

http://manuals.magnamaniac.com

① Battery
② Negative battery lead
③ Tail/brake light coupler
④ Rear turn signal light connector
⑤ Seat lock cable
⑥ Anti-theft alarm coupler
⑦ Fuse box 2
⑧ Positive battery lead
⑨ Fuse box 1
⑩ Rear fender
⑪ Rear fender cover

A Fasten the tail/brake light lead with two plastic locking ties so that the coupler is positioned to the inside of where the relays (turn signal/hazard relay, headlight relay, radiator fan motor relay, and relay unit) branch off from the wire harness.
B To relays (turn signal/hazard relay, headlight relay, radiator fan motor relay, and relay unit)
C Fasten the rear turn signal light leads and tail/brake light lead with a lead holder.

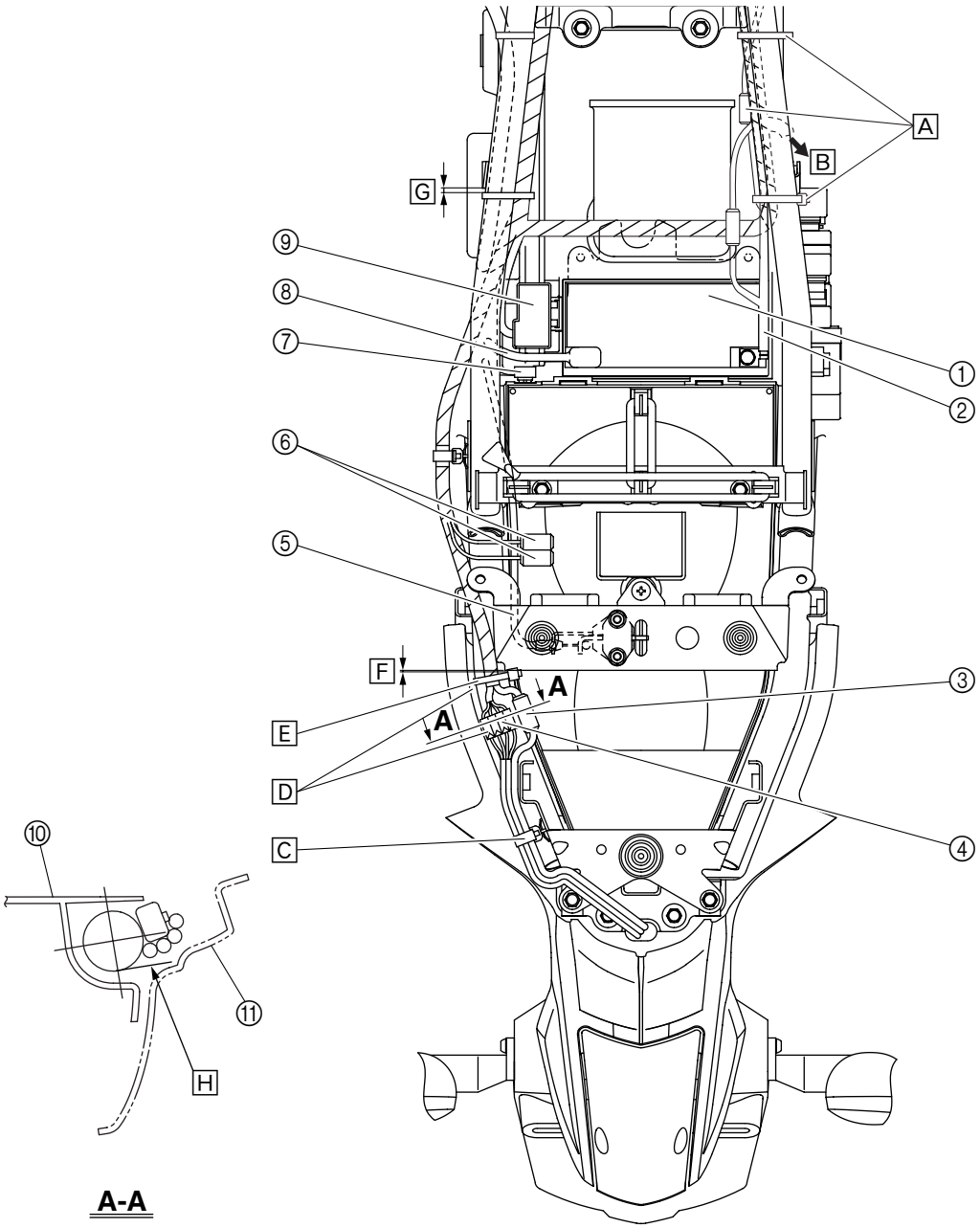

http://manuals.magnamaniac.com

[D] Connect the couplers so that they are not pinched between the rear fender and rear fender cover.
[E] Fasten the wire harness to the frame with a plastic locking tie.
[F] 0 ~ 5 mm (0 ~ 0.20 in)
[G] 0 ~ 10 mm (0 ~ 0.39 in)
[H] The tail/brake light coupler and the rear turn signal light lead should not be lower than the line shown in the illustration.

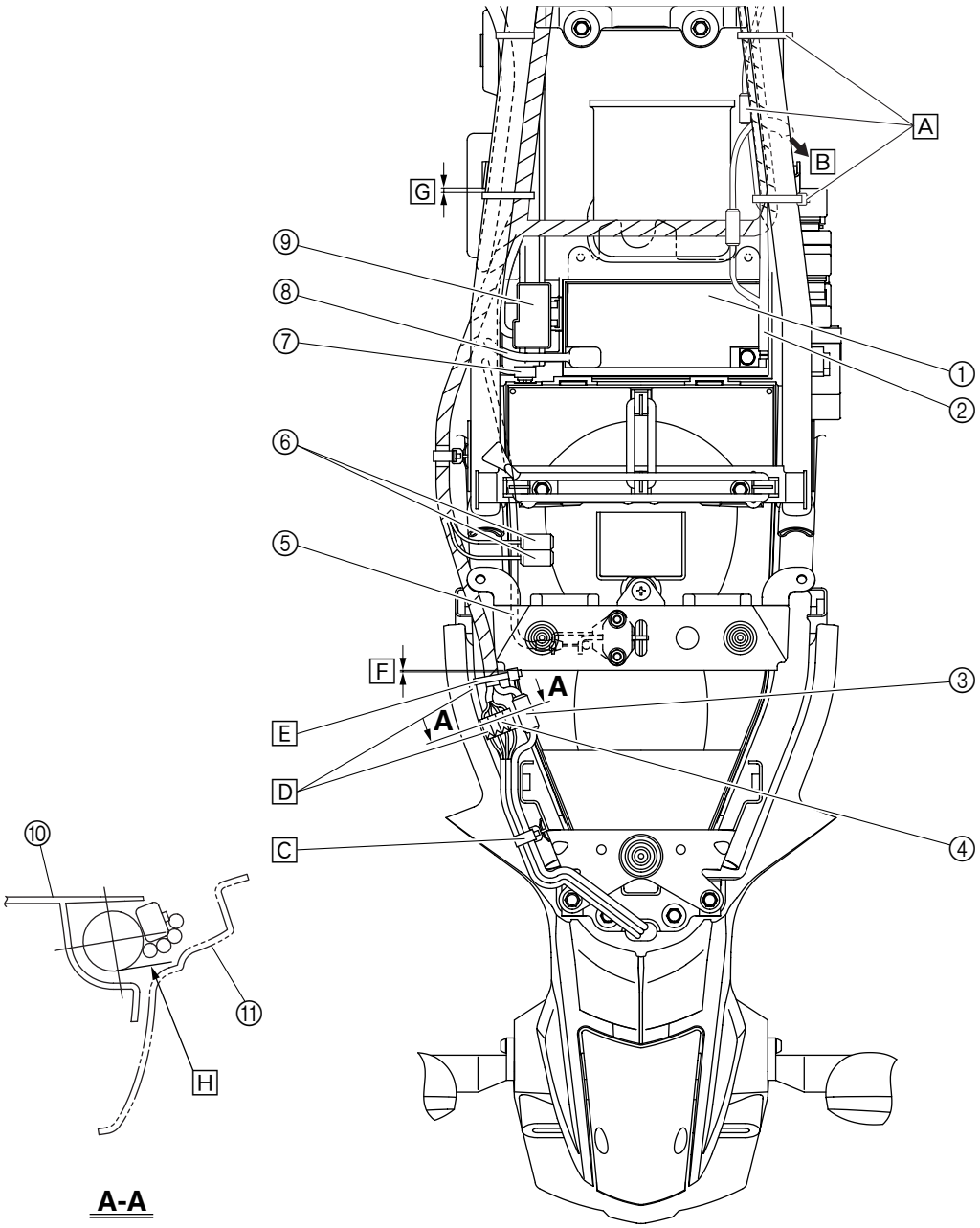

http://manuals.magnamaniac.com

① Front brake hose
② Front brake master cylinder
③ Front mud guard
④ Front brake caliper
⑤ Front fork boss

A To install the brake hose holders, align the edge of each holder with the upper edge of the recess in the brake hose.
B Route the front brake hose so that its alignment mark is facing toward the rear of the motorcycle.
C 30 ~ 50°
D Fasten the front brake hose with the brake hose holders.

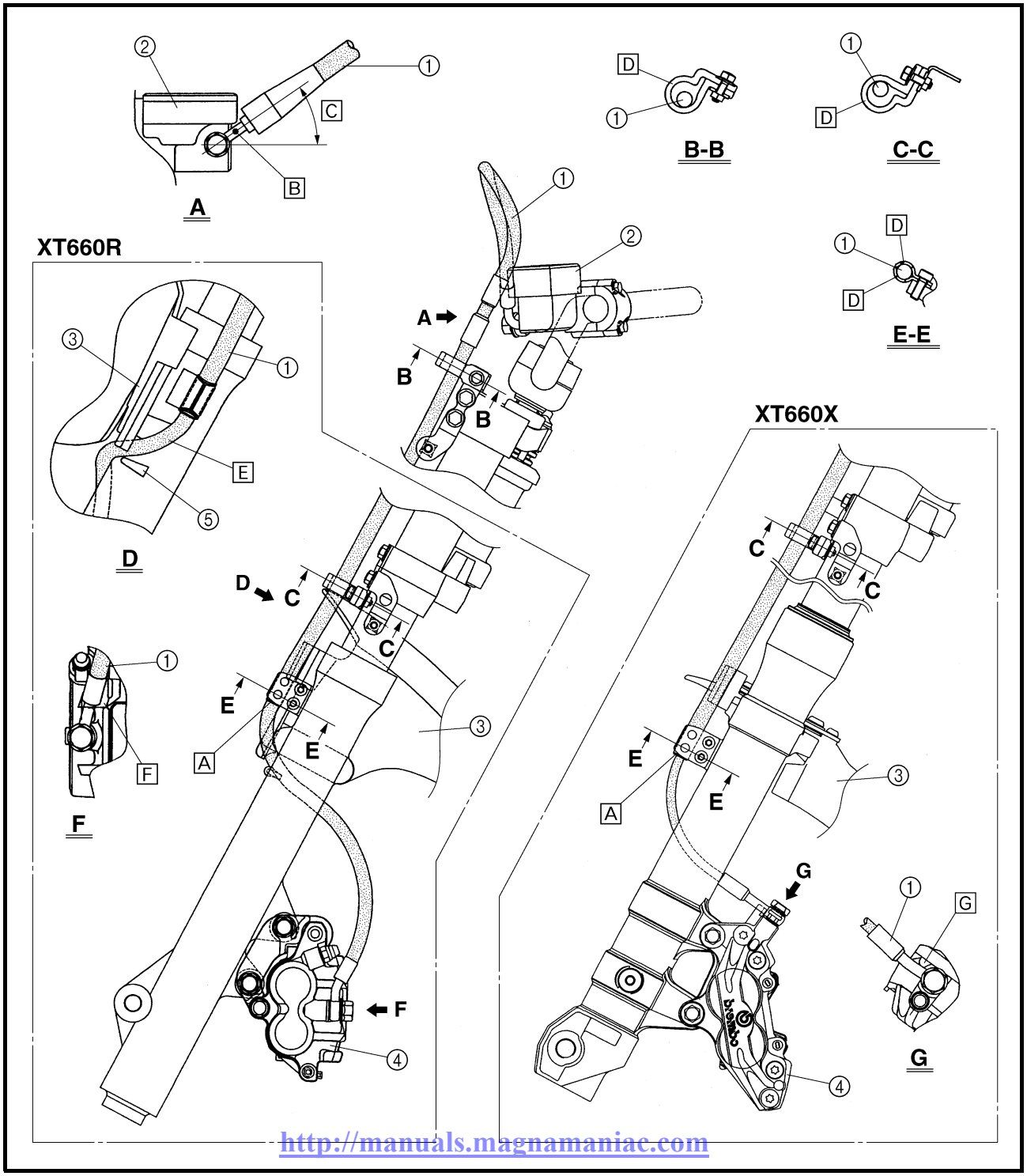

http://manuals.magnamaniac.com

E Route the front brake hose between the front fork and front mud guard and between the bosses on the front fork.
F When installing the brake hose onto the brake caliper, make sure that the brake pipe touches the brake caliper as shown.
G When installing the brake hose onto the brake caliper, make sure that the brake pipe touches the projection on the brake caliper.

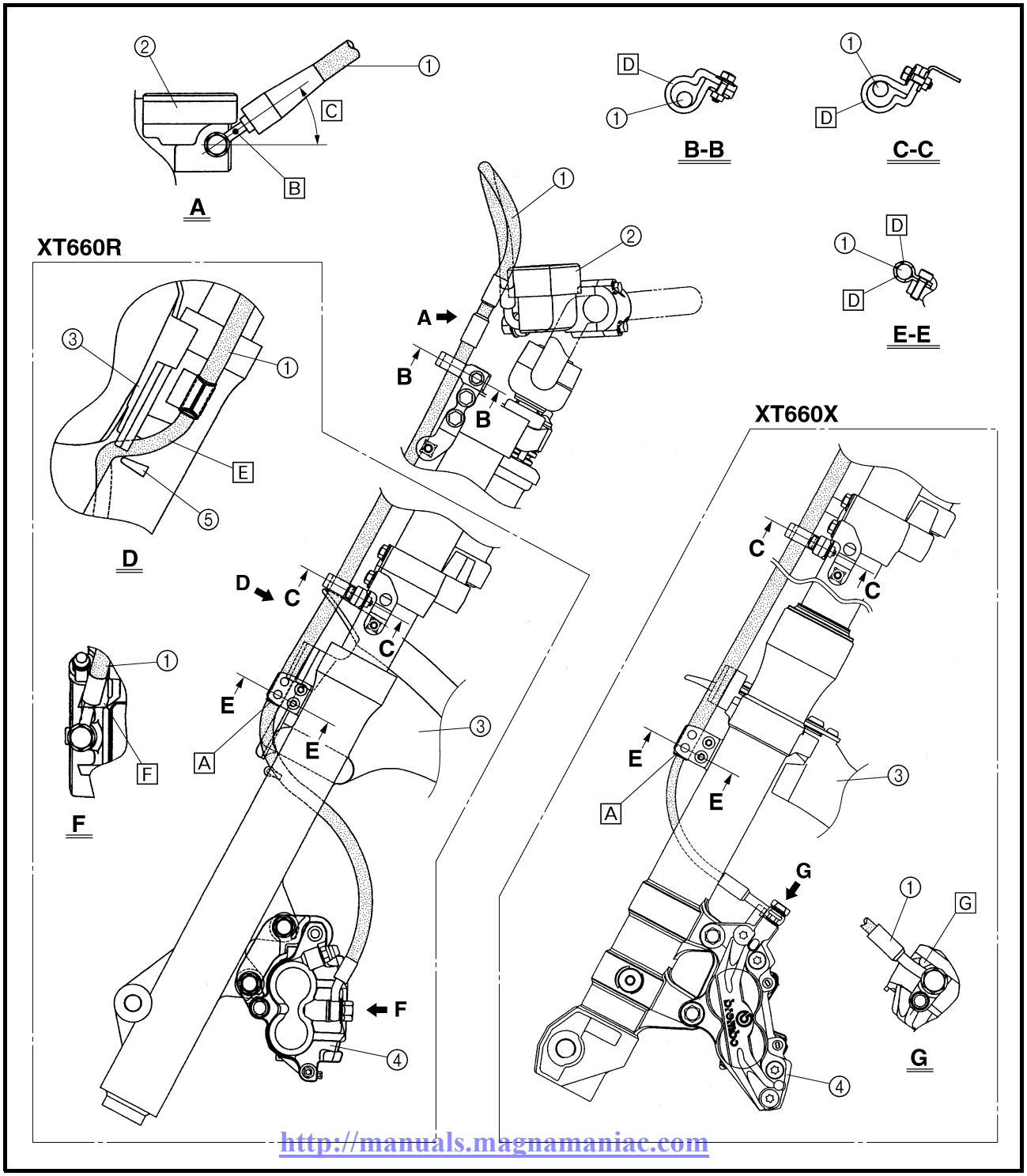

http://manuals.magnamaniac.com

① Brake fluid reservoir
② Brake fluid reservoir hose
③ Rear brake light switch
④ Rear brake master cylinder
⑤ Rear brake hose
⑥ Rear brake caliper

[A] When installing the brake hose onto the brake master cylinder, make sure that the brake pipe touches the brake master cylinder as shown.
[B] Fasten the rear brake hose with the brake hose holder.
[C] When installing the brake hose onto the brake caliper, make sure that the brake pipe touches the brake caliper as shown.

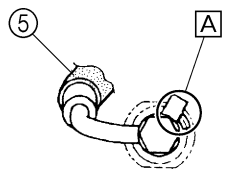

A

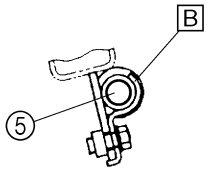

B-B

C

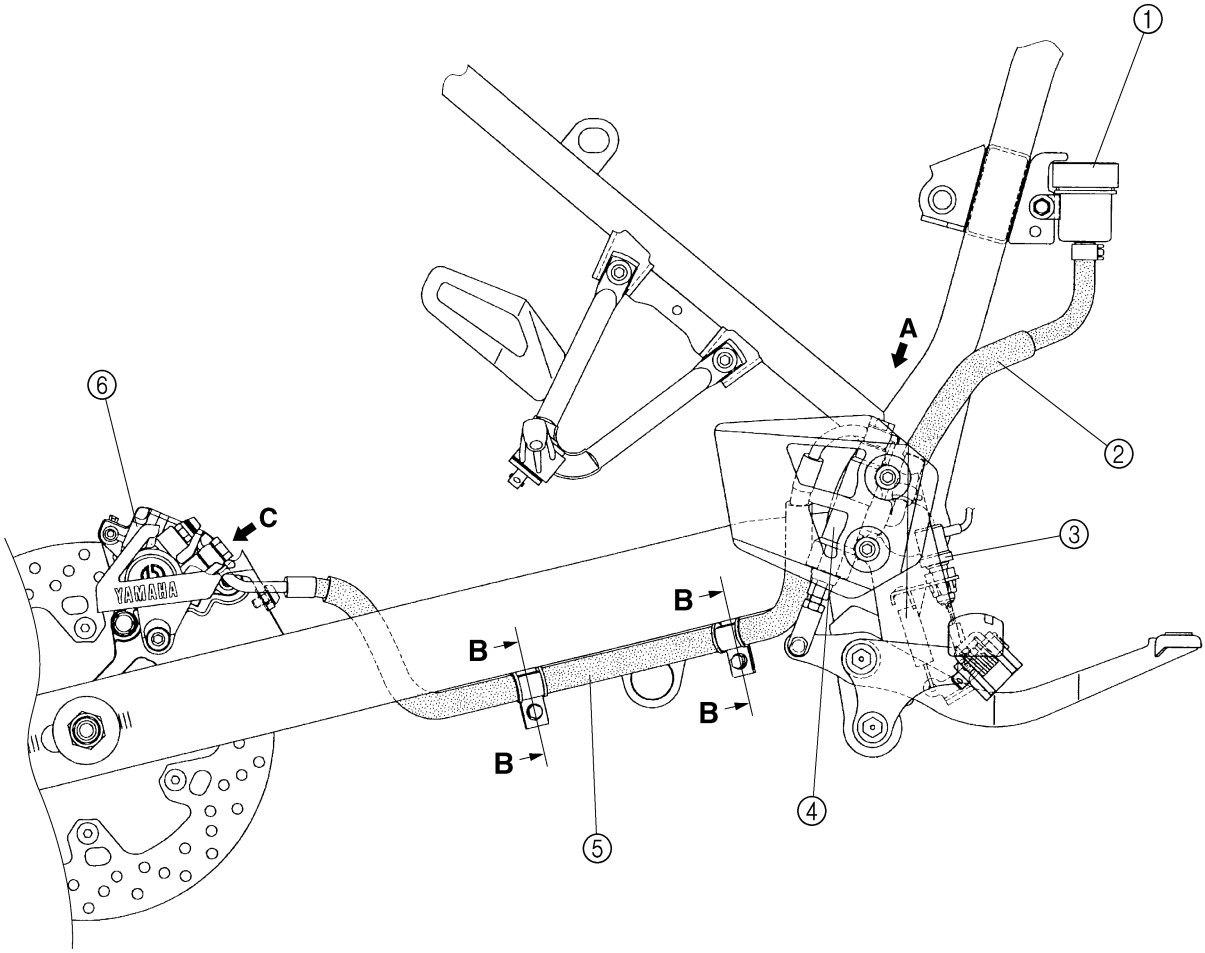

http://manuals.magnamaniac.com

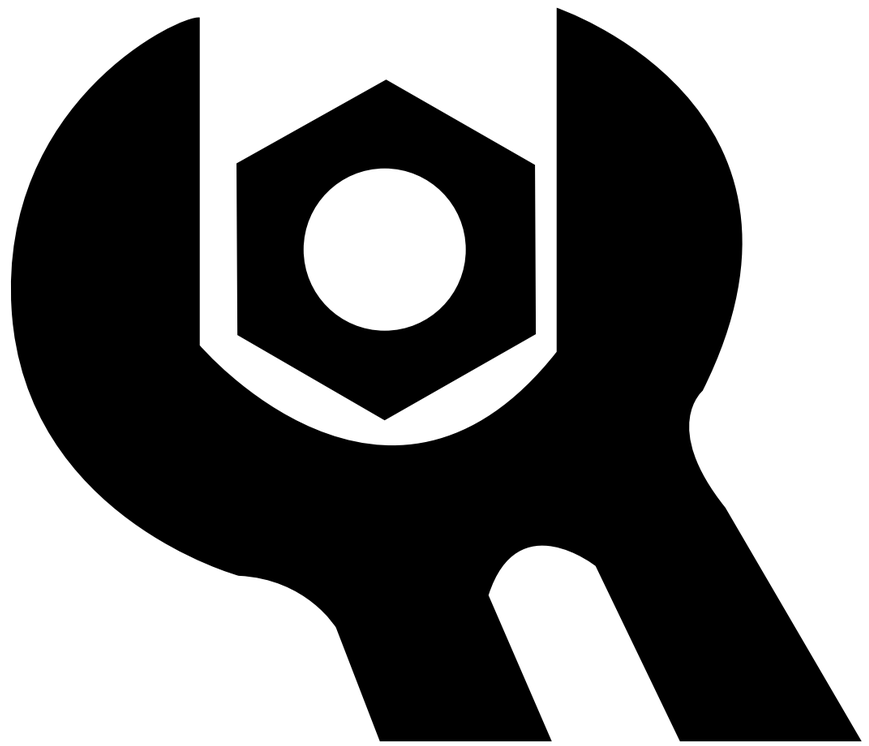

CHK ADJ

3

https://manuals.magnamaniac.com

CHAPTER 3
PERIODIC CHECKS AND ADJUSTMENTS

INTRODUCTION 3-1

PERIODIC MAINTENANCE AND LUBRICATION CHART 3-1

COWLING AND COVER 3-3
- COVER 3-3
- COWLING 3-4

FUEL TANK 3-5
- REMOVING THE FUEL TANK 3-6
- REMOVING THE FUEL PUMP 3-6
- INSTALLING THE FUEL PUMP 3-7
- INSTALLING THE FUEL HOSE 3-7

AIR FILTER CASE 3-8
- REAR MUD GUARD AND REAR FENDER 3-8
- AIR FILTER CASE 3-10
- INSTALLING THE AIR FILTER CASE JOINT CLAMP 3-12

ENGINE 3-13
- ADJUSTING THE VALVE CLEARANCE 3-13
- ADJUSTING THE EXHAUST GAS VOLUME 3-16
- ADJUSTING THE ENGINE IDLING SPEED 3-17
- ADJUSTING THE THROTTLE CABLE FREE PLAY 3-17
- CHECKING THE SPARK PLUG 3-19
- CHECKING THE IGNITION TIMING 3-20
- MEASURING THE COMPRESSION PRESSURE 3-21
- CHECKING THE ENGINE OIL LEVEL 3-23
- CHANGING THE ENGINE OIL 3-24
- ADJUSTING THE CLUTCH CABLE FREE PLAY 3-27
- CHECKING THE AIR FILTER ELEMENT 3-28
- CHECKING THE THROTTLE BODY JOINT 3-29
- CHECKING THE FUEL HOSE 3-29
- CHECKING THE BREATHER HOSE 3-30
- CHECKING THE EXHAUST SYSTEM 3-30
- CHECKING THE COOLANT LEVEL 3-31
- CHECKING THE COOLING SYSTEM 3-31
- CHANGING THE COOLANT 3-32

http://manuals.magnamaniac.com

CHASSIS 3-36
ADJUSTING THE REAR BRAKE PEDAL 3-36
CHECKING THE BRAKE FLUID LEVEL 3-37
CHECKING THE FRONT AND REAR BRAKE PADS AND BRAKE PAD PINS 3-38
ADJUSTING THE REAR BRAKE LIGHT SWITCH 3-38
CHECKING THE FRONT AND REAR BRAKE HOSES 3-39
BLEEDING THE HYDRAULIC BRAKE SYSTEM 3-40
ADJUSTING THE SHIFT PEDAL 3-41
ADJUSTING THE DRIVE CHAIN SLACK 3-42
LUBRICATING THE DRIVE CHAIN 3-44
CHECKING AND ADJUSTING THE STEERING HEAD 3-44
CHECKING THE FRONT FORK 3-46
ADJUSTING THE REAR SHOCK ABSORBER ASSEMBLY 3-47
CHECKING THE TIRES 3-48
CHECKING AND TIGHTENING THE SPOKES 3-51
CHECKING AND LUBRICATING THE CABLES 3-52
LUBRICATING THE LEVERS AND BRAKE PEDAL 3-52
LUBRICATING THE SIDESTAND 3-52

ELECTRICAL SYSTEM 3-53
CHECKING AND CHARGING THE BATTERY 3-53
CHECKING THE FUSES 3-58
REPLACING THE HEADLIGHT BULB 3-60
ADJUSTING THE HEADLIGHT BEAM 3-61
SETTING THE DIGITAL CLOCK 3-62

http://manuals.magnamaniac.com

EAS00036

PERIODIC CHECKS AND ADJUSTMENTS

INTRODUCTION

This chapter includes all information necessary to perform recommended checks and adjustments. If followed, these preventive maintenance procedures will ensure more reliable vehicle operation, a longer service life and reduce the need for costly overhaul work. This information applies to vehicles already in service as well as to new vehicles that are being prepared for sale. All service technicians should be familiar with this entire chapter.

EAS00037

PERIODIC MAINTENANCE AND LUBRICATION CHART

NOTE:

- **The annual checks must be performed every year, except if a kilometer-based maintenance is performed instead.**
- From 50,000 km, repeat the maintenance intervals starting from 10,000 km.
- Items marked with an asterisk should be performed by a Yamaha dealer as they require special tools, data and technical skills.

No.		ITEM	CHECK OR MAINTENANCE JOB	ODOMETER READING (× 1,000 km)					ANNUAL CHECK
				1	10	20	30	40	
1	*	**Fuel line (See page 3-29)**	• Check fuel hoses for cracks or damage.		√	√	√	√	√
2		**Spark plug (See page 3-19)**	• Check condition. • Clean and regap.		√		√		
			• Replace.			√		√	
3	*	**Valves (See page 3-13)**	• Check valve clearance. • Adjust.			√		√	
4		**Air filter element (See page 3-28)**	• Replace.			√		√	
5		**Clutch (See page 3-27)**	• Check operation. • Adjust.	√	√	√	√	√	
6	*	**Front brake (See page 3-37, 3-38)**	• Check operation, fluid level and vehicle for fluid leakage.	√	√	√	√	√	√
			• Replace brake pads.	**Whenever worn to the limit**					
7	*	**Rear brake (See page 3-36, 3-37, 3-38)**	• Check operation, fluid level and vehicle for fluid leakage.	√	√	√	√	√	√
			• Replace brake pads.	**Whenever worn to the limit**					
8	*	**Brake hoses (See page 3-39)**	• Check for cracks or damage.		√	√	√	√	√
			• Replace.	**Every 4 years**					
9	*	**Wheels (See page 4-3, 4-14)**	• Check runout, spoke tightness and for damage. • Tighten spokes if necessary.	√	√	√	√	√	
10	*	**Tires (See page 3-48)**	• Check tread depth and for damage. • Replace if necessary. • Check air pressure. • Correct if necessary.		√	√	√	√	√
11	*	**Wheel bearings (See page 4-3)**	• Check bearing for looseness or damage.		√	√	√	√	
12	*	**Swingarm (See page 4-83)**	• Check operation and for excessive play.		√	√	√	√	
13		**Drive chain (See page 3-42, 4-84)**	• Check chain slack. • Make sure that the rear wheel is properly aligned. • Clean and lubricate.	**Every 500 km and after washing the motorcycle or riding in the rain**					
14	*	**Steering bearings (See page 3-44, 4-71)**	• Check bearing play and steering for roughness.	√	√	√	√	√	
			• Lubricate with lithium-soap-based grease.	**Every 20,000 km**					

http://manuals.magnamaniac.com

CHK ADJ

No.		ITEM	CHECK OR MAINTENANCE JOB	ODOMETER READING (× 1,000 km)					ANNUAL CHECK
				1	10	20	30	40	
15	*	**Chassis fasteners (See page 2-23)**	• Make sure that all nuts, bolts and screws are properly tightened.		√	√	√	√	√
16		**Sidestand (See page 3-53)**	• Check operation. • Lubricate.		√	√	√	√	√
17	*	**Sidestand switch (See page 8-5)**	• Check operation.	√	√	√	√	√	√
18	*	**Front fork (See page 3-46)**	• Check operation and for oil leakage.		√	√	√	√	
19	*	**Shock absorber assembly (See page 3-47)**	• Check operation and shock absorber for oil leakage.		√	√	√	√	
20	*	**Rear suspension relay arm and connecting arm pivoting points (See page 4-78)**	• Check operation.		√	√	√	√	
21	*	**Electronic fuel injection (See page 3-17)**	• Adjust engine idling speed.	√	√	√	√	√	√
22		**Engine oil (See page 3-23, 3-24)**	• Change. • Check oil level and vehicle for oil leakage.	√	√	√	√	√	√
23		**Engine oil filter element (See page 3-24)**	• Replace.	√		√		√	
24	*	**Cooling system (See page 3-31, 3-32)**	• Check coolant level and vehicle for coolant leakage.		√	√	√	√	√
			• Change.	**Every 3 years**					
25	*	**Front and rear brake switches (See page 3-38, 8-5)**	• Check operation.	√	√	√	√	√	√
26		**Moving parts and cables (See page 3-52)**	• Lubricate.		√	√	√	√	√
27	*	**Throttle grip housing and cable (See page 3-17)**	• Check operation and free play. • Adjust the throttle cable free play if necessary. • Lubricate the throttle grip housing and cable.		√	√	√	√	√
28	*	**Air induction system (See page 7-36)**	• Check the air cut-off valve, reed valve, and hose for damage. • Replace the entire air induction system if necessary.		√	√	√	√	√
29	*	**Mufflers and exhaust pipes (See page 3-30)**	• Check the screw clamps for looseness.	√	√	√	√	√	√
30	*	**Lights, signals and switches (See page 3-61)**	• Check operation. • Adjust headlight beam.	√	√	√	√	√	√

NOTE:

- Replace the air filter element more frequently if you are riding in unusually wet or dusty areas.
- Hydraulic brake service
  - Regularly check and, if necessary, correct the brake fluid level.
  - Every two years replace the internal components of the brake master cylinder, and change the brake fluid.
  - Replace the brake hoses every four years and if cracked or damaged.

http://manuals.magnamaniac.com

COWLING AND COVER

COVER

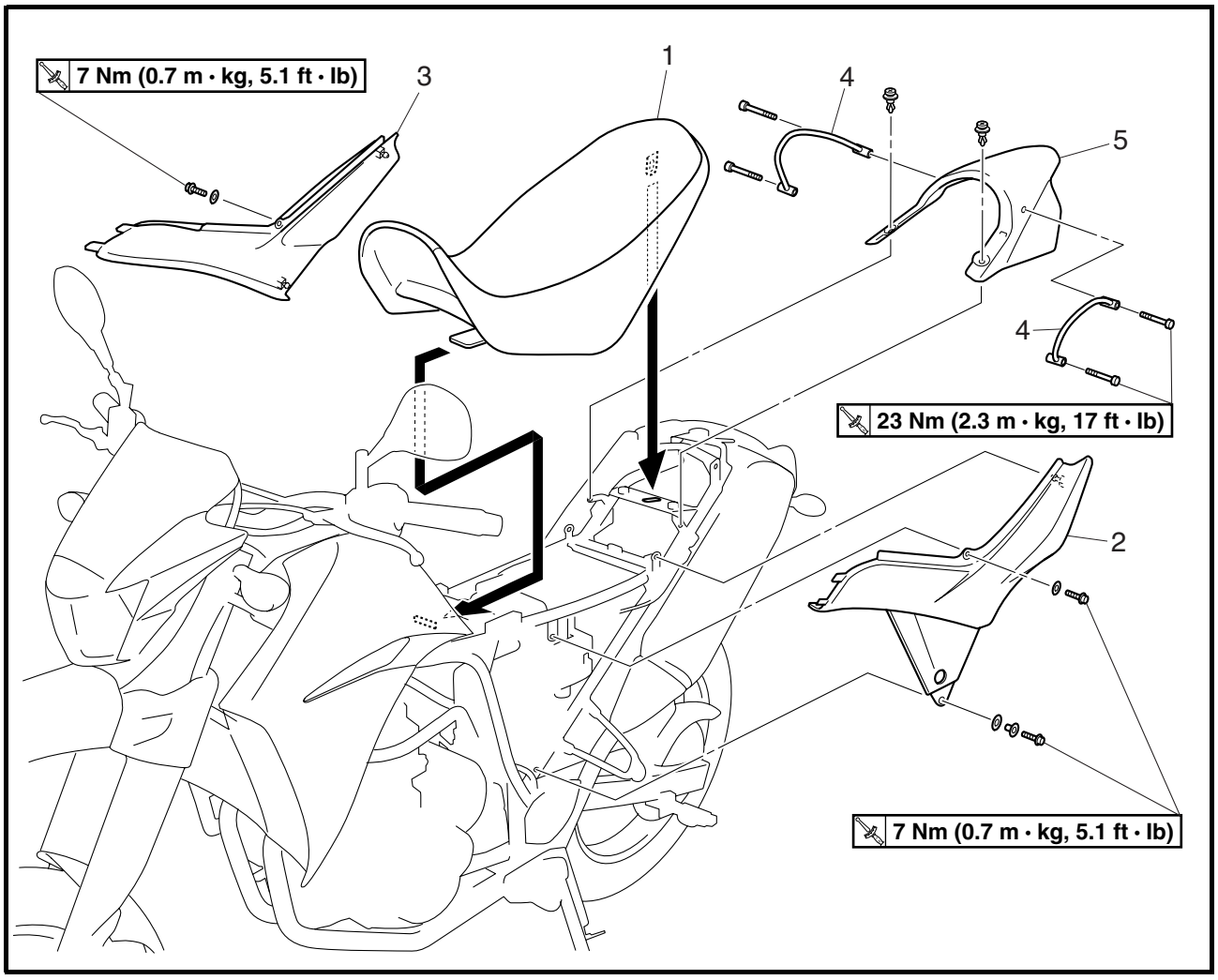

Order	Job/Part	Q'ty	Remarks
	Removing the cover		Remove the parts in the order listed.
1	Seat	1	
2	Left side panel	1	
3	Right side panel	1	
4	Grab bar	2	
5	Rear cover	1	
			For installation, reverse the removal procedure.

http://manuals.magnamaniac.com

COWLING

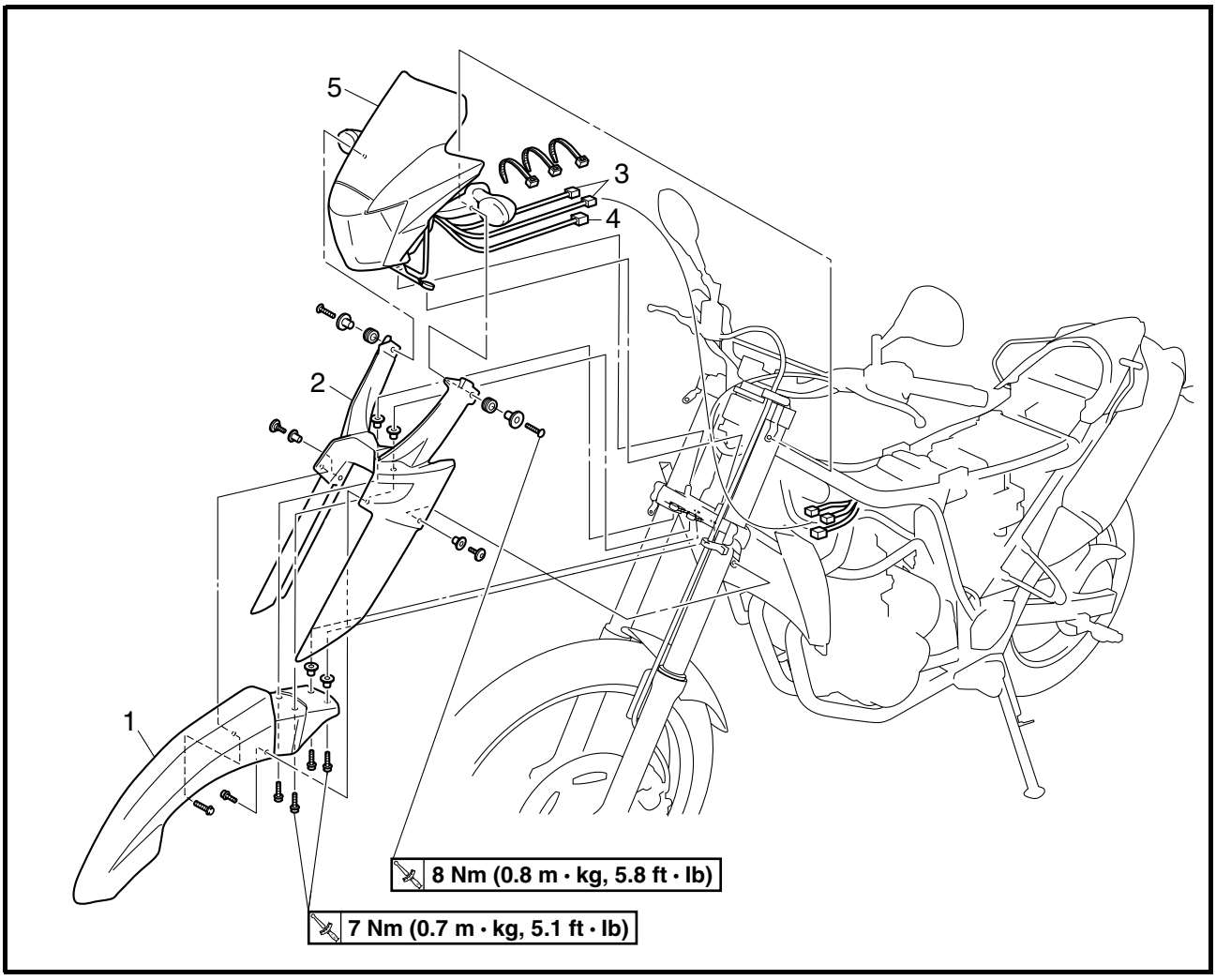

Order	Job/Part	Q'ty	Remarks
	Removing the cowling		Remove the parts in the order listed.
	Seat/side panels (left and right)		Refer to "COWLING AND COVER".
	Fuel tank		Refer to "FUEL TANK".
1	Front fender	1	
2	Front fork protector	1	
3	Meter assembly coupler	2	Disconnect.
4	Sub-wire harness coupler	1	Disconnect.
5	Front cowling assembly	1	
			For installation, reverse the removal procedure.

http://manuals.magnamaniac.com

EAS00040
FUEL TANK

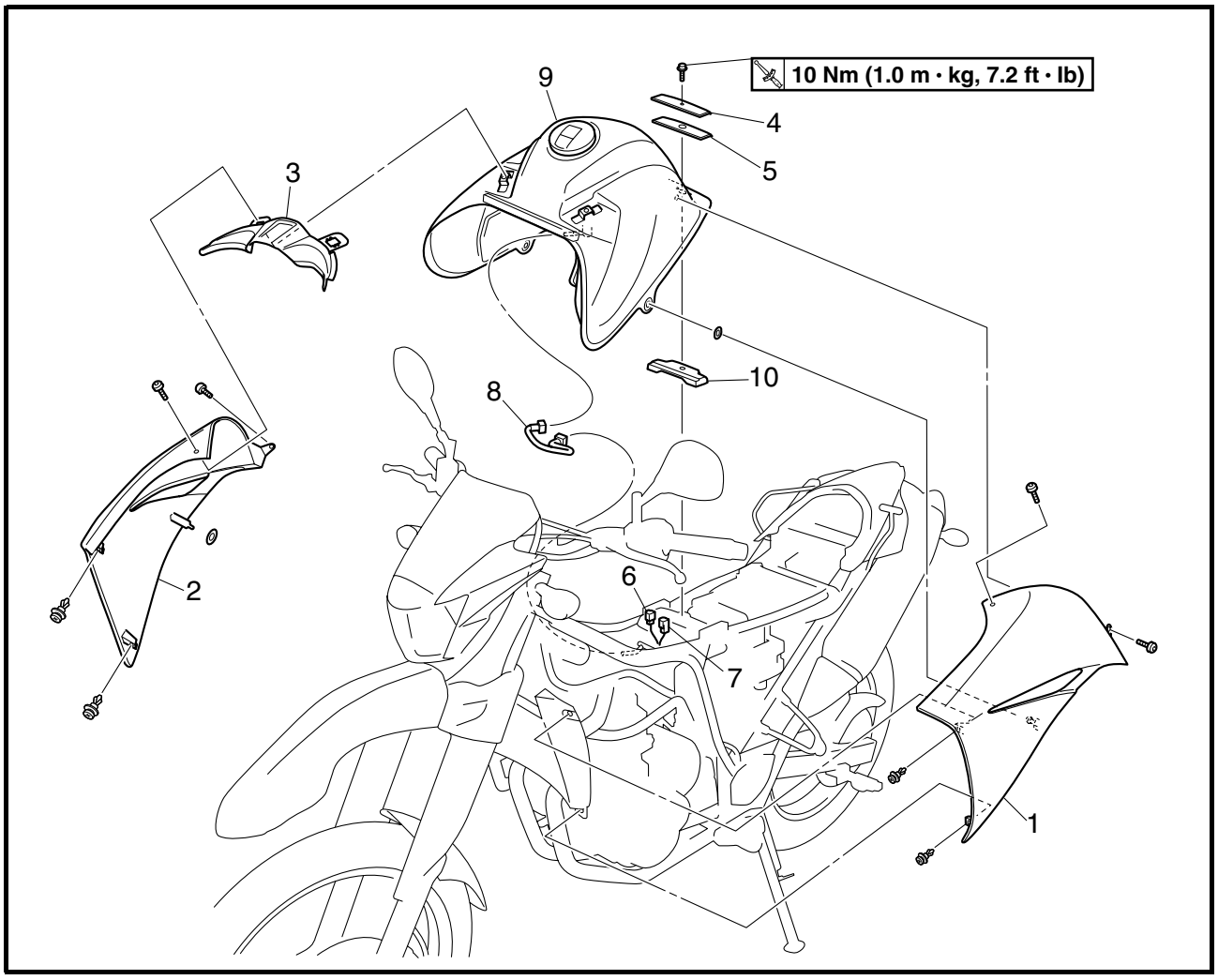

Order	Job/Part	Q'ty	Remarks
	Removing the fuel tank		Remove the parts in the order listed.
	Seat/side panels (left and right)		Refer to "COWLING AND COVER".
	Fuel		Drain.
1	Fuel tank left side cover	1	
2	Fuel tank right side cover	1	
3	Intake air guide	1	
4	Fuel tank plate	1	
5	Damper 1	1	
6	Fuel pump coupler	1	Disconnect.
7	Fuel sender coupler	1	Disconnect.
8	Fuel hose	1	Refer to "REMOVING THE FUEL TANK" and "INSTALLING THE FUEL HOSE".
9	Fuel tank	1	
10	Damper 2	1	
			For installation, reverse the removal procedure.

http://manuals.magnamaniac.com

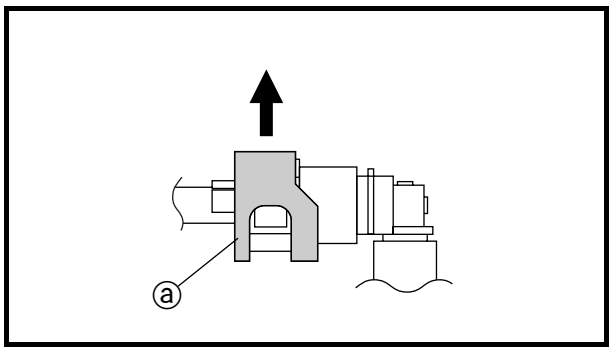

REMOVING THE FUEL TANK

1. Extract the fuel in the fuel tank through the fuel tank filler tube with a pump.
2. Remove:
   - fuel hose

CAUTION:

Although the fuel has been removed from the fuel tank be careful when removing the fuel hose, since there may be fuel remaining in it.

NOTE:

- To remove the fuel hose from the fuel injection pipe, slide the cover ⓐ on the end of the hose in the direction of the arrow shown and then remove the hose.
- Before removing the hose, place a few rags in the area under where it will be removed.

3. Remove:
   - fuel tank

NOTE:

Do not set the fuel tank down so that the installation surface of the fuel pump is directly under the tank. Be sure to lean the fuel tank in an upright position.

REMOVING THE FUEL PUMP

1. Remove:
   - fuel pump

CAUTION:

- **Do not drop the fuel pump or give it a strong shock.**
- **Do not touch the base section of the fuel sender.**

http://manuals.magnamaniac.com

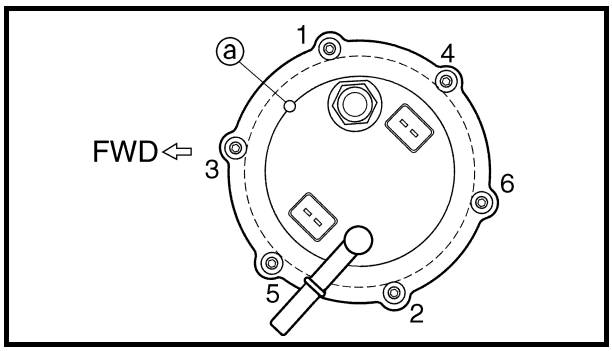

INSTALLING THE FUEL PUMP

1. Install:
   - fuel pump — 4 Nm (0.4 m · kg, 2.9 ft · lb)

NOTE:

- Do not damage the installation surfaces of the fuel tank when installing the fuel pump.
- Always use a new fuel pump gasket.
- Align the projection ⓐ on the fuel pump with the slot in the fuel pump bracket.
- Tighten the bolts to the specified torque in the proper tightening sequence as shown.
- Install the fuel pump in the direction shown in the illustration.

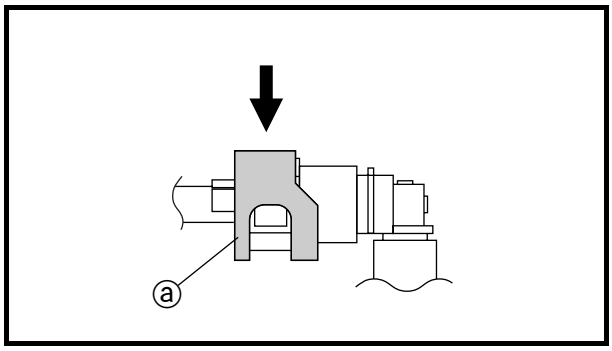

INSTALLING THE FUEL HOSE

1. Install:
   - fuel hose

CAUTION:

When installing the fuel hose, be sure to securely connect it.

NOTE:

To install the fuel hose from the fuel injection pipe, slide the cover ⓐ on the end of the hose in the direction of the arrow shown.

http://manuals.magnamaniac.com

AIR FILTER CASE

REAR MUD GUARD AND REAR FENDER

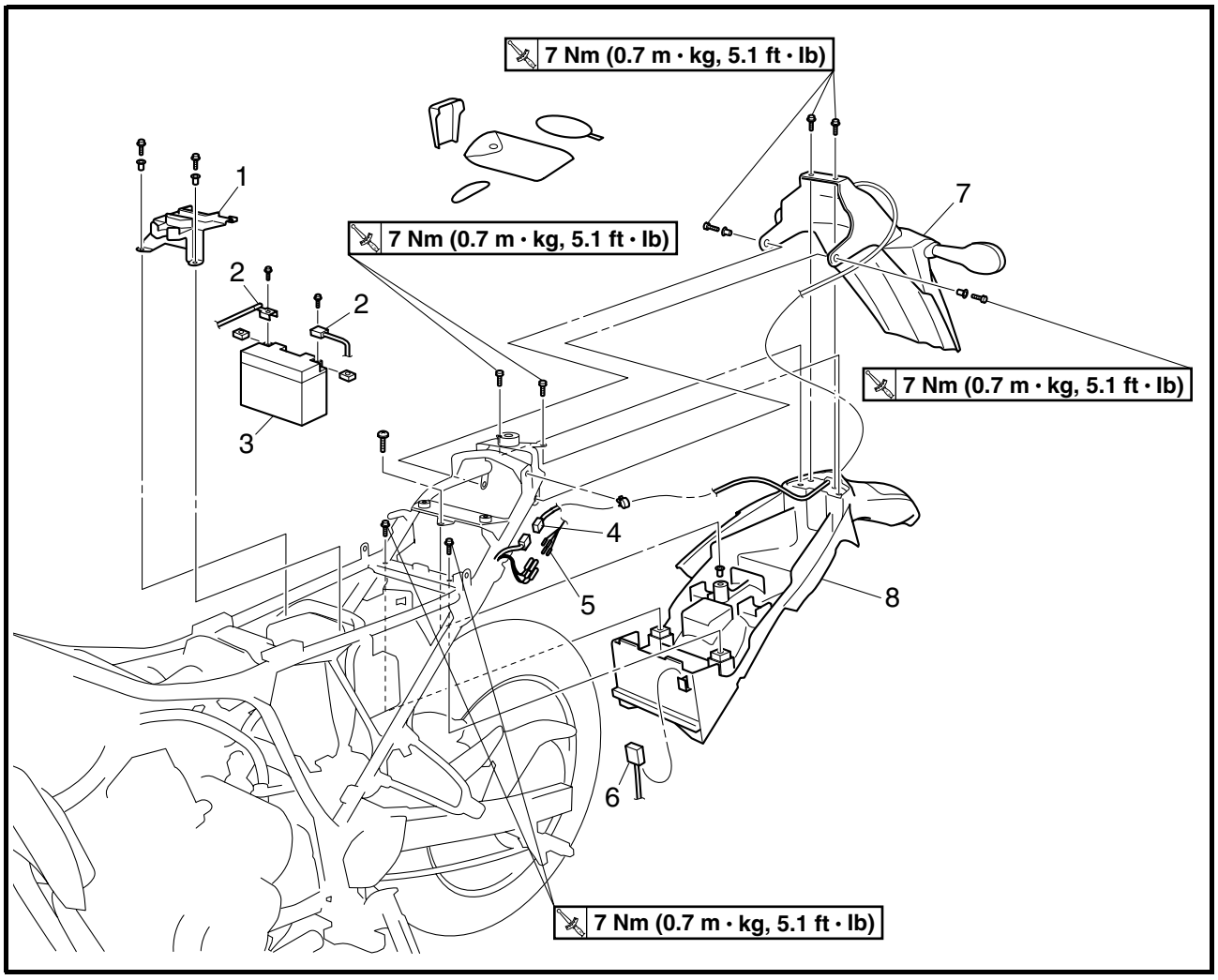

Order	Job/Part	Q'ty	Remarks
	Removing the rear mud guard and rear fender		Remove the parts in the order listed.
	Seat/side panels (left and right)/rear cover		Refer to "COWLING AND COVER".
	Fuel tank		Refer to "FUEL TANK".
	Muffler		Refer to "ENGINE" in chapter 5.
1	Battery cover	1	
2	Battery lead	2	Disconnect.
			CAUTION: **First, disconnect the negative battery lead, then the positive battery lead.**
3	Battery	1	
4	Tali/brake light coupler	1	Disconnect.
5	Rear turn signal light connector	4	Disconnect.

http://manuals.magnamaniac.com

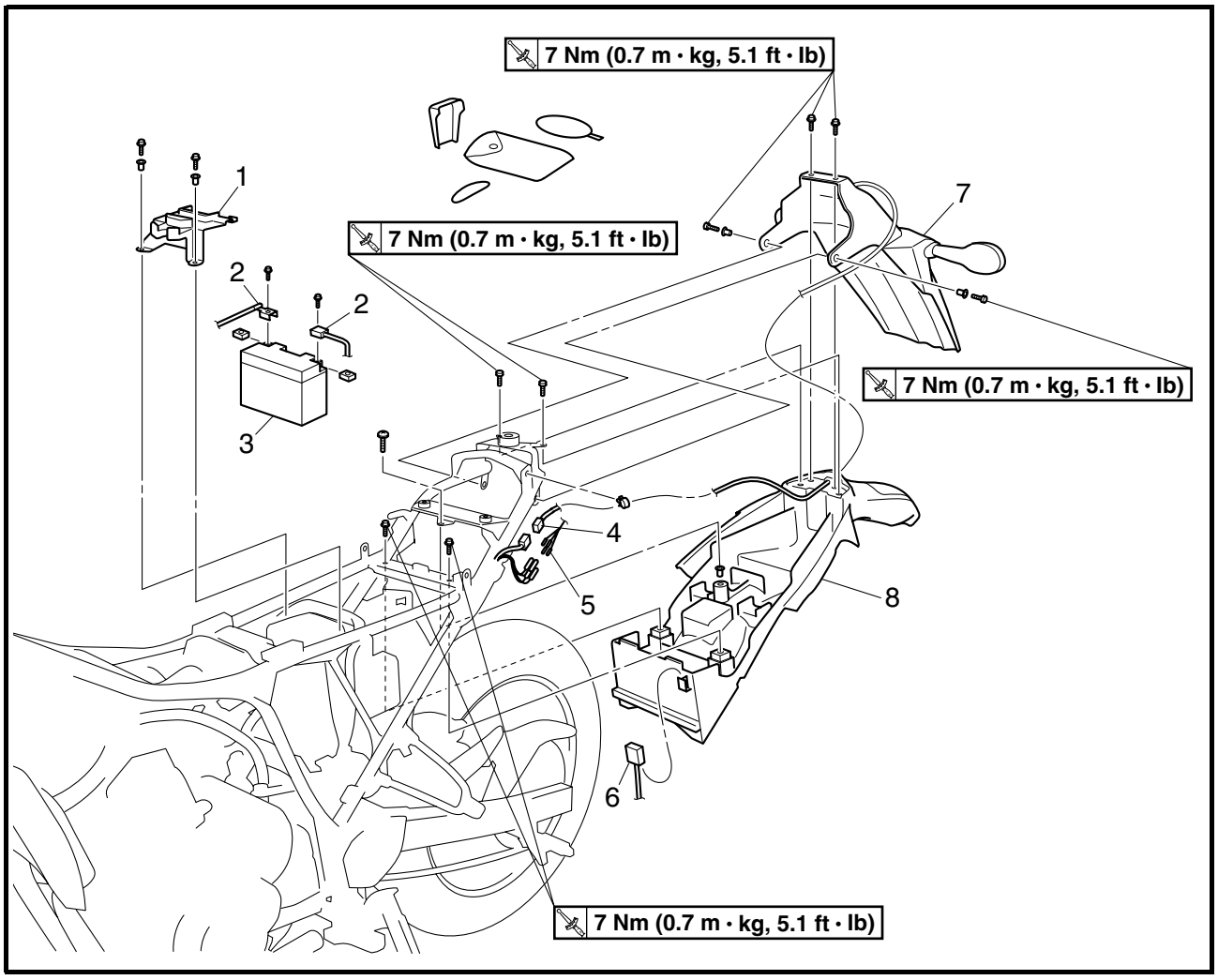

Order	Job/Part	Q'ty	Remarks
6	Fuse box 2	1	
7	Rear mud guard	1	
8	Rear fender	1	
			For installation, reverse the removal procedure.

http://manuals.magnamaniac.com

EAS00043

AIR FILTER CASE

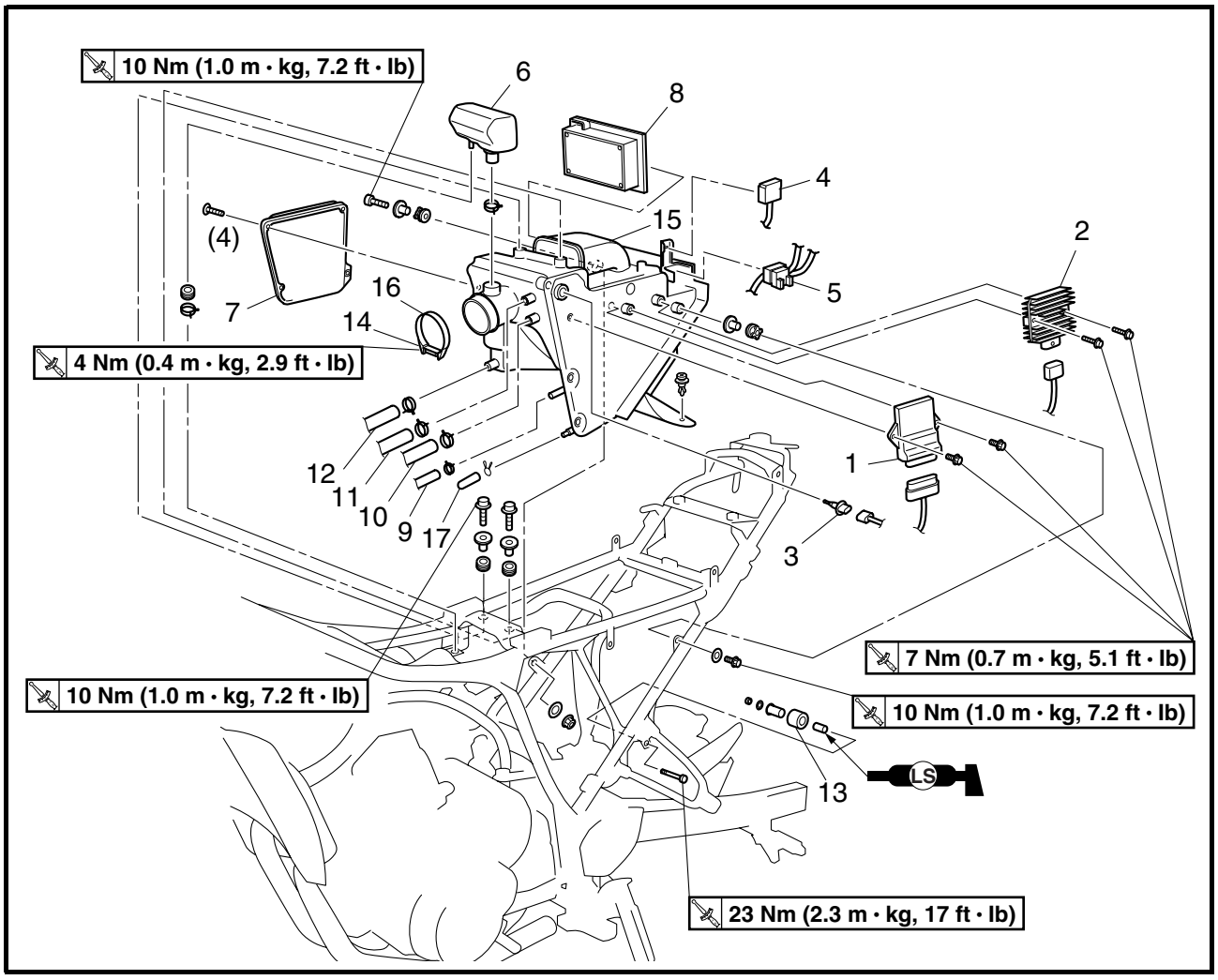

Order	Job/Part	Q'ty	Remarks
	Removing the air filter case		Remove the parts in the order listed.
	Rear wheel		Refer to "REAR WHEEL, BRAKE DISC, AND REAR WHEEL SPROCKET" in chapter 4.
1	ECU	1	
2	Rectifier/regulator	1	
3	Intake air temperature sensor	1	
4	Fuse box 1	1	
5	Starter relay	1	
6	Intake air chamber case	1	
7	Air filter case cover (right)	1	
8	Air filter element	1	
9	Air filter case breather hose	1	
10	Pilot air hose	1	Disconnect.
11	Air filter case to air cut-off valve hose	1	Disconnect.

http://manuals.magnamaniac.com

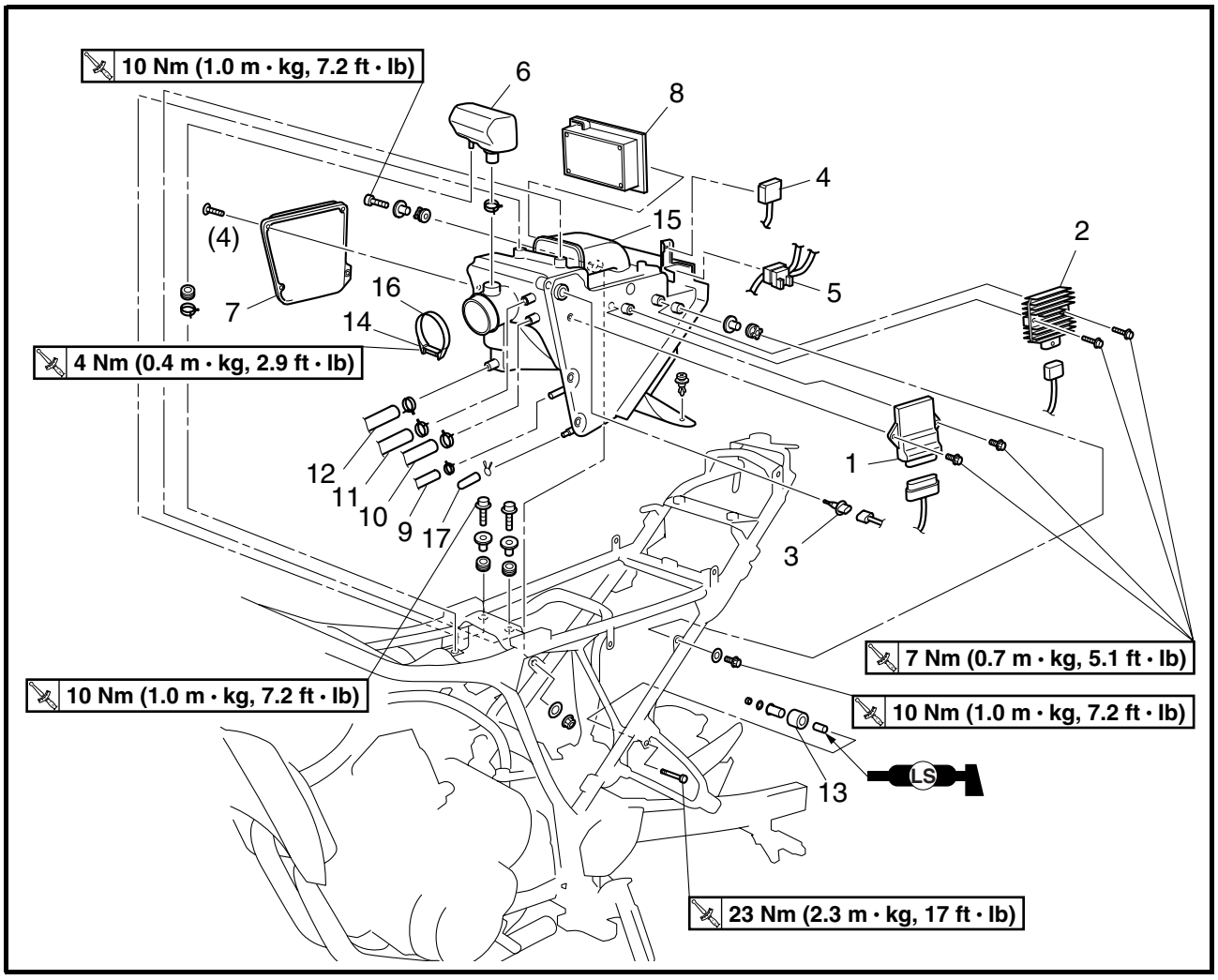

Order	Job/Part	Q'ty	Remarks
12	Air-filter-to-crankcase-breather-chamber hose	1	Disconnect.
13	Drive chain tensioner	1	
14	Air filter case joint clamp screw	1	Loosen.
15	Air filter case	1	
16	Air filter case joint clamp	1	Refer to "INSTALLING THE AIR FILTER CASE JOINT CLAMP".
17	Check hose	1	For installation, reverse the removal procedure.

http://manuals.magnamaniac.com

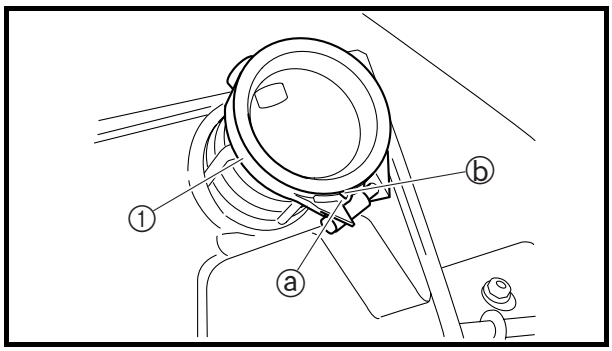

INSTALLING THE AIR FILTER CASE JOINT CLAMP

1. Install:
   - air filter case joint clamp ①

NOTE:

To install the air filter case joint clamp, align its slot ⓐ with the projection ⓑ on the air filter case.

http://manuals.magnamaniac.com

EAS00049
ENGINE
ADJUSTING THE VALVE CLEARANCE
The following procedure applies to all of the valves.

NOTE:
- Valve clearance adjustment should be made on a cold engine, at room temperature.
- When the valve clearance is to be measured or adjusted, the piston must be at top dead center (TDC) on the compression stroke.

1. Remove:
   - seat
   - side panels (left and right)
     Refer to “COWLING AND COVER”.
   - fuel tank
     Refer to “FUEL TANK”.
   - radiator
     Refer to “RADIATOR” in chapter 6.
   - air-filter-to-air-cut-off-valve hose
     Refer to “AIR INDUCTION SYSTEM” in chapter 7.

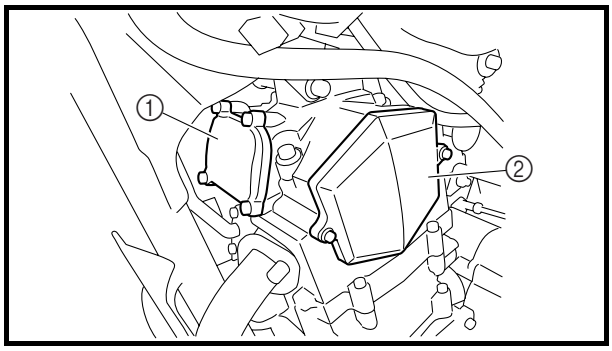

2. Remove:
   - intake tappet cover
   - exhaust tappet cover ①
   - camshaft sprocket cover ②

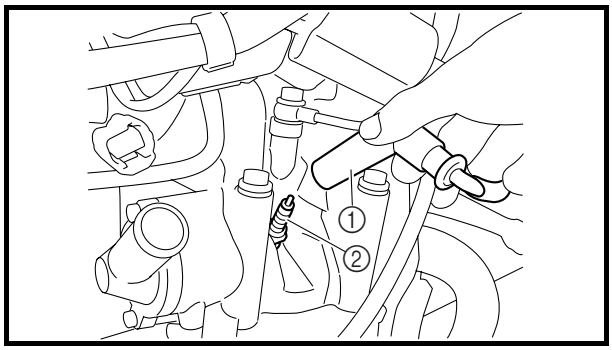

3. Disconnect:
   - spark plug cap ①
4. Remove:
   - spark plug ②

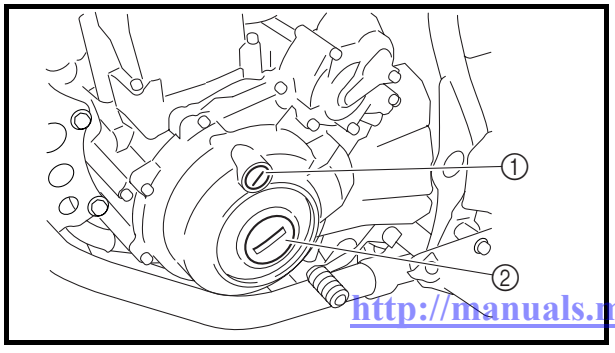

5. Remove:
   - timing mark accessing screw ①
   - crankshaft end accessing screw ②

http://manuals.magnamaniac.com

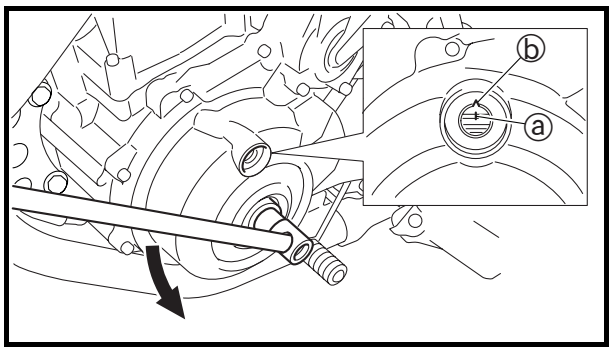

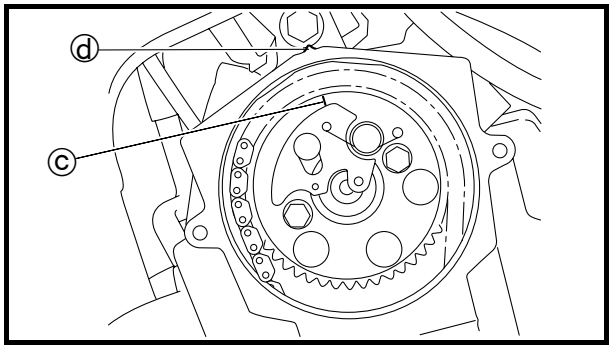

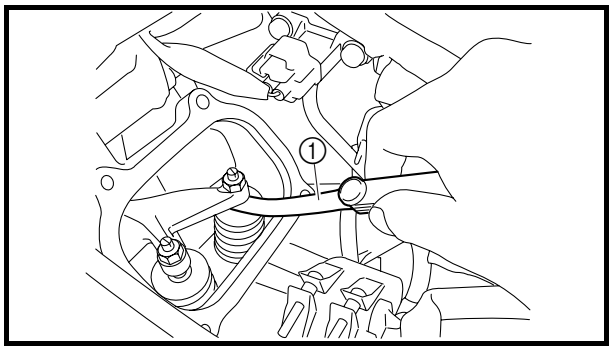

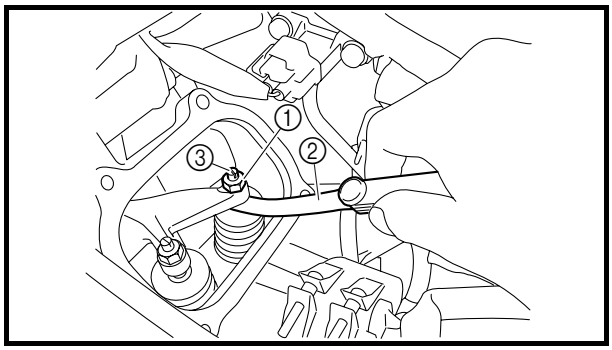

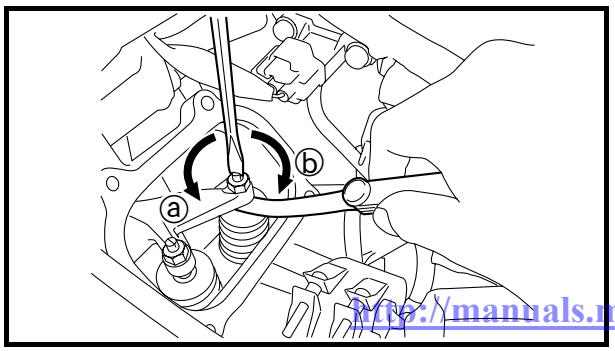

6. Measure:
   • valve clearance
   Out of specification → Adjust.

Valve clearance (cold)
Intake valve
0.09 ~ 0.13 mm
(0.0035 ~ 0.0051 in)
Exhaust valve
0.16 ~ 0.20 mm
(0.0063 ~ 0.0079 in)

▼▼▼▼▼▼▼▼▼▼▼▼▼▼▼▼▼▼▼▼▼▼▼▼▼▼▼▼▼▼▼▼▼▼

a. Turn the crankshaft counterclockwise.
b. When the piston is at the top dead center (TDC) on the compression stroke, align the "I" mark ⓐ on the A.C. magneto rotor with the stationary pointer ⓑ on the A.C. magneto cover.

NOTE:

To position the piston at top dead center (TDC) on the compression stroke, align the "I" mark ⓒ on the camshaft sprocket with the stationary pointer ⓓ on the cylinder head, as shown in the illustration.

c. Measure the valve clearance with a thickness gauge ①.

Thickness gauge
90890-03079

Out of specification → Adjust.

▲▲▲▲▲▲▲▲▲▲▲▲▲▲▲▲▲▲▲▲▲▲▲▲▲▲▲▲▲▲▲▲▲▲

7. Adjust:
   • valve clearance

▼▼▼▼▼▼▼▼▼▼▼▼▼▼▼▼▼▼▼▼▼▼▼▼▼▼▼▼▼▼▼▼▼▼

a. Loosen the locknut ①.
b. Insert a thickness gauge ② between the end of the adjusting screw and the valve tip.
c. Turn the adjusting screw ③ in direction ⓐ or ⓑ until the specified valve clearance is obtained.

Direction ⓐ	**Valve clearance is increased.**
Direction ⓑ	**Valve clearance is decreased.**

http://manuals.magnamaniac.com

d. Hold the adjusting screw to prevent it from moving and tighten the locknut to the specified torque.

	Locknut **14 Nm (1.4 m · kg, 10 ft · lb)**

e. Measure the valve clearance again.
f. If the valve clearance is still out of specification, repeat all of the valve clearance adjustment steps until the specified clearance is obtained.

▲▲▲▲▲▲▲▲▲▲▲▲▲▲▲▲▲▲▲▲▲▲▲▲▲▲▲▲▲▲▲▲▲▲

8. Install:
   - timing mark accessing screw
   - crankshaft end accessing screw
9. Install:
   - spark plug — **13 Nm (1.3 m · kg, 9.4 ft · lb)**
10. Connect:
   - spark plug cap
11. Install:
   - camshaft sprocket cover — **10 Nm (1.0 m · kg, 7.2 ft · lb)**
   - O-rings ① New
   - intake tappet cover — **10 Nm (1.0 m · kg, 7.2 ft · lb)**
   - exhaust tappet cover — **10 Nm (1.0 m · kg, 7.2 ft · lb)**
12. Install:
   - air-filter-to-air-cut-off-valve hose
     Refer to “AIR INDUCTION SYSTEM” in chapter 7.
   - radiator
     Refer to “RADIATOR” in chapter 6.
   - fuel tank
     Refer to “FUEL TANK”.
   - side panels (left and right)
   - seat
     Refer to “COWLING AND COVER”.

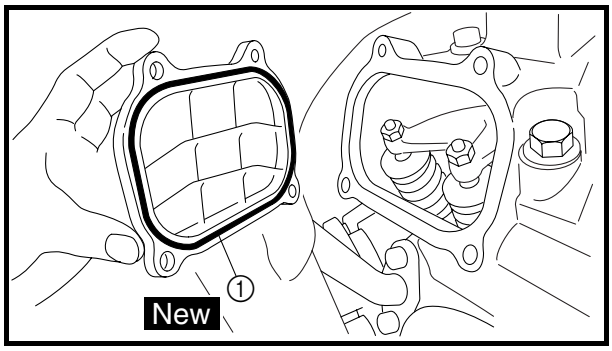

http://manuals.magnamaniac.com

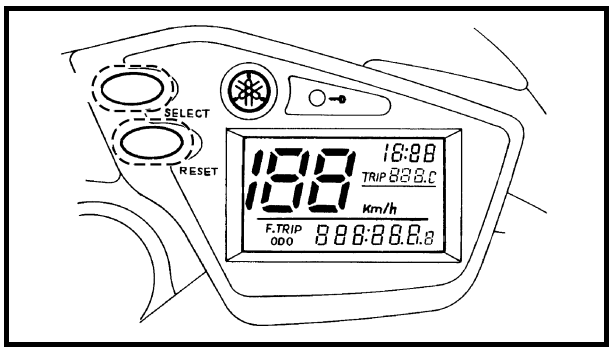

EAS00869
ADJUSTING THE EXHAUST GAS VOLUME

NOTE:
Be sure to set the CO density level to standard, and then adjust the exhaust gas volume.

1. Turn the main switch to "OFF" and set the engine stop switch to "◯".
2. Simultaneously press and hold the "SELECT" and "RESET" buttons, turn the main switch to "ON", and continue to press the buttons for 8 seconds or more.

NOTE:
"dIAG" appears on the odometer/fuel reserve tripmeter/tripmeter 2 LCD.

3. Press the "SELECT" button to select the CO adjustment mode "Co" or the diagnostic mode "dIAG".
4. After selecting "Co", simultaneously press the "SELECT" and "RESET" buttons for 2 seconds or more to execute the selection.

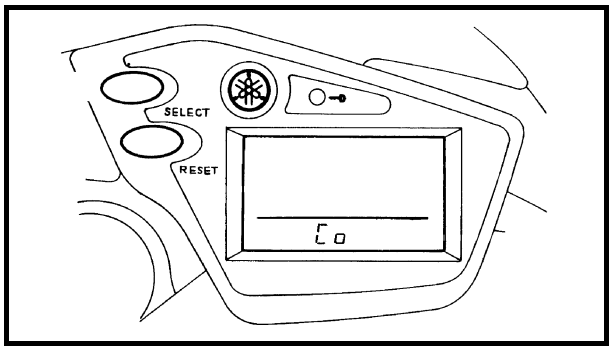

NOTE:
- The tachometer mode is executed and it is displayed on the tripmeter 1 LCD.
- "C1" appears on the odometer/fuel reserve tripmeter/tripmeter 2 LCD.

5. Press the "SELECT" and "RESET" buttons to change the CO adjustment volume.

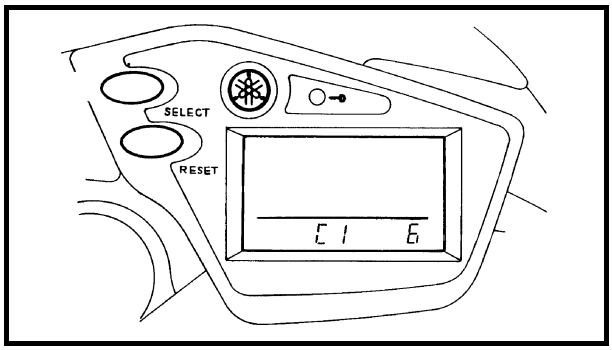

NOTE:
The CO adjustment volume appears on the odometer/fuel reserve tripmeter/tripmeter 2 LCD.
- To decrease the CO adjustment volume, press the "RESET" button.
- To increase the CO adjustment volume, press the "SELECT" button.

6. Release the switch to execute the selection.
7. Turn the main switch to "OFF" to cancel the mode.

http://manuals.magnamaniac.com

EAS00054
ADJUSTING THE ENGINE IDLING SPEED

NOTE:
Prior to adjusting the engine idling speed, the air filter element should be cleaned, and the engine should have adequate compression.

1. Start the engine and let it warm up for several minutes.
2. Check:
   • engine idling speed
   Out of specification → Adjust.

	Engine idling speed **1,300 ~ 1,500 r/min**

3. Adjust:
   • engine idling speed

▼▼▼▼▼▼▼▼▼▼▼▼▼▼▼▼▼▼▼▼▼▼▼▼▼▼▼▼▼▼▼▼▼▼

a. Turn the throttle stop screw ① in direction ⓐ or ⓑ until the specified engine idling speed is obtained.

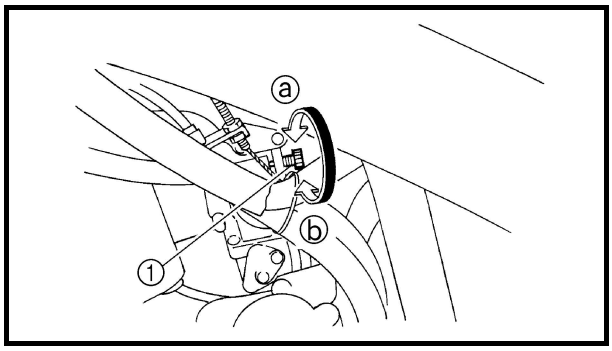

Direction ⓐ	**Engine idling speed is increased.**
Direction ⓑ	**Engine idling speed is decreased.**

▲▲▲▲▲▲▲▲▲▲▲▲▲▲▲▲▲▲▲▲▲▲▲▲▲▲▲▲▲▲▲▲▲▲

4. Adjust:
   • throttle cable free play
   Refer to “ADJUSTING THE THROTTLE CABLE FREE PLAY”.

	Throttle cable free play (at the flange of the throttle grip) **3.0 ~ 5.0 mm (0.12 ~ 0.20 in)**

EAS00056
ADJUSTING THE THROTTLE CABLE FREE PLAY

NOTE:
Prior to adjusting the throttle cable free play, the engine idling speed should be adjusted properly.

http://manuals.magnamaniac.com

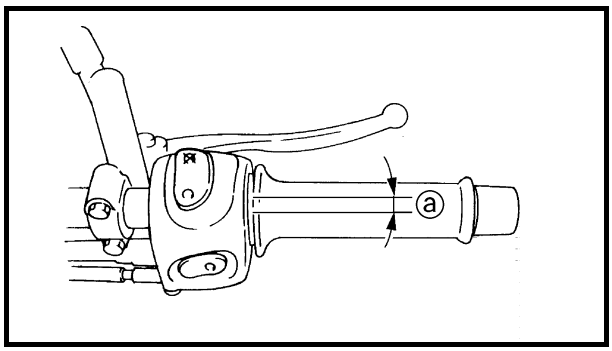

1. Check:
   - throttle cable free play ⓐ
     Out of specification → Adjust.

Throttle cable free play (at the flange of the throttle grip)
3.0 ~ 5.0 mm (0.12 ~ 0.20 in)

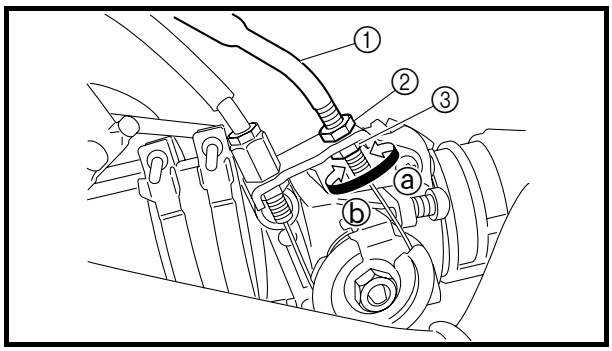

2. Adjust:
   - throttle cable free play

▼▼▼▼▼▼▼▼▼▼▼▼▼▼▼▼▼▼▼▼▼▼▼▼▼▼▼▼▼▼▼▼

NOTE:
When the throttle is opened, the accelerator cable ① is pulled.

Throttle body end

a. Loosen the locknut ② on the accelerator cable.
b. Turn the adjusting nut ③ in direction ⓐ or ⓑ until the specified throttle cable free play is obtained.

Direction ⓐ	**Throttle cable free play is increased.**
Direction ⓑ	**Throttle cable free play is decreased.**

c. Tighten the locknut.

NOTE:
If the specified throttle cable free play cannot be obtained on the throttle body end of the cable, adjust the free play at the handlebar end of the cable using the adjusting nut.

Handlebar end

a. Loosen the locknut ①.
b. Turn the adjusting nut ② in direction ⓐ or ⓑ until the specified throttle cable free play is obtained.

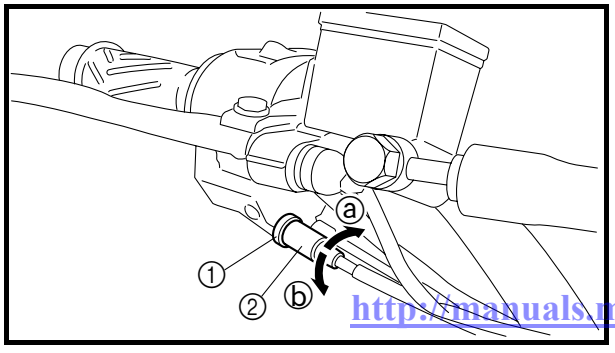

Direction ⓐ	**Throttle cable free play is increased.**
Direction ⓑ	**Throttle cable free play is decreased.**

http://manuals.magnamaniac.com

c. Tighten the locknut.

⚠ WARNING

After adjusting the throttle cable free play, start the engine and turn the handlebars to the right and to the left to ensure that this does not cause the engine idling speed to change.

▲▲▲▲▲▲▲▲▲▲▲▲▲▲▲▲▲▲▲▲▲▲▲▲▲▲▲▲▲▲

EAS00060

CHECKING THE SPARK PLUG

1. Disconnect:
   - spark plug cap
2. Remove:
   - spark plug

CAUTION:

Before removing the spark plug, blow away any dirt accumulated in the spark plug well with compressed air to prevent it from falling into the cylinder.

3. Check:
   - spark plug type
     Incorrect → Change.

Spark plug type (manufacturer)
CR7E (NGK)

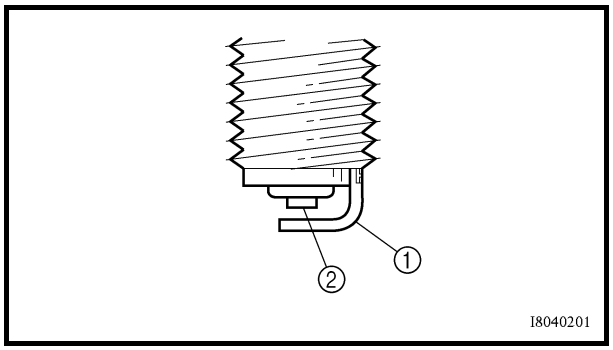

4. Check:
   - electrode ①
     Damage/wear → Replace the spark plug.
   - insulator ②
     Abnormal color → Replace the spark plug.
     Normal color is medium-to-light tan.
5. Clean:
   - spark plug
     (with a spark plug cleaner or wire brush)

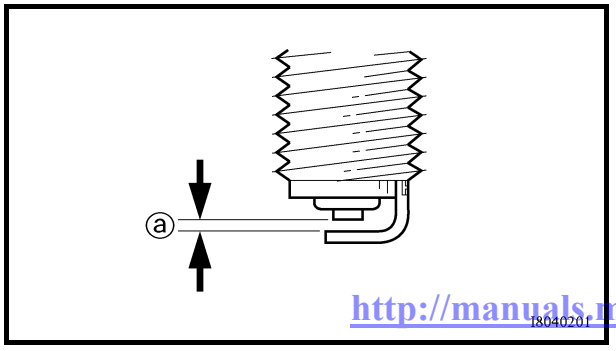

6. Measure:
   - spark plug gap ⓐ
     (with a thickness gauge)
     Out of specification → Regap.

Spark plug gap
0.7 ~ 0.8 mm (0.028 ~ 0.031 in)

http://manuals.magnamaniac.com

7. Install:
   • spark plug — 13 Nm (1.3 m · kg, 9.4 ft · lb)

NOTE:
Before installing the spark plug, clean the spark plug and gasket surface.

8. Connect:
   • spark plug cap

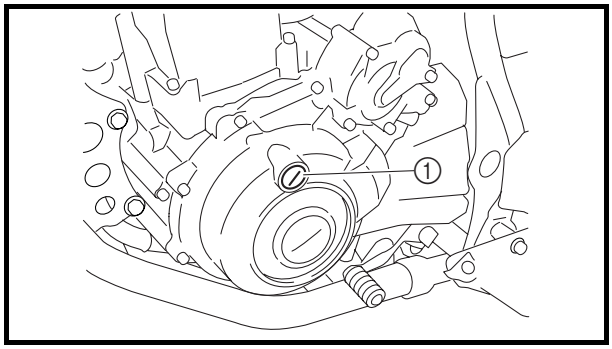

EAS00064
CHECKING THE IGNITION TIMING

NOTE:
Prior to checking the ignition timing, check the wiring connections of the entire ignition system. Make sure all connections are tight and free of corrosion.

1. Remove:
   • timing mark accessing screw ①
2. Connect:
   • timing light
     (onto the spark plug lead)

	Timing light **90890-03141**

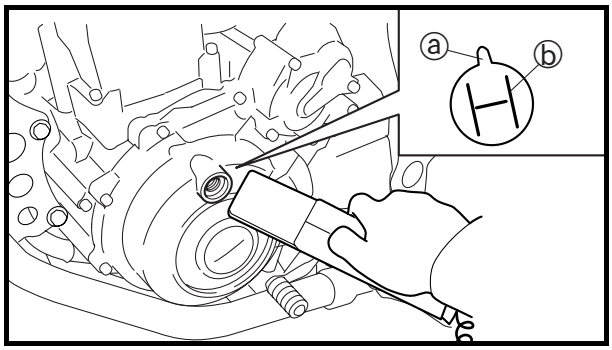

3. Check:
   • ignition timing

▼▼▼▼▼▼▼▼▼▼▼▼▼▼▼▼▼▼▼▼▼▼▼▼▼▼▼▼▼▼▼▼▼▼

a. Start the engine, warm it up for several minutes, and then let it run at the specified engine idling speed.

	Engine idling speed **1,300 ~ 1,500 r/min**

b. Check that the stationary pointer ⓐ is within the firing range ⓑ on the A.C. magneto rotor.
   Incorrect firing range → Check the ignition system.

NOTE:
The ignition timing is not adjustable.

▲▲▲▲▲▲▲▲▲▲▲▲▲▲▲▲▲▲▲▲▲▲▲▲▲▲▲▲▲▲▲▲▲▲

http://manuals.magnamaniac.com

4. Detach:
   • timing light
5. Install:
   • timing mark accessing screw

EAS00067
MEASURING THE COMPRESSION PRESSURE

NOTE:
Insufficient compression pressure will result in a loss of performance.

1. Measure:
   • valve clearance
   Out of specification → Adjust.
   Refer to "ADJUSTING THE VALVE CLEARANCE".
2. Start the engine, warm it up for several minutes, and then turn it off.
3. Disconnect:
   • spark plug cap
4. Remove:
   • spark plug

CAUTION:
Before removing the spark plug, blow away any dirt accumulated in the spark plug well with compressed air to prevent it from falling into the cylinder.

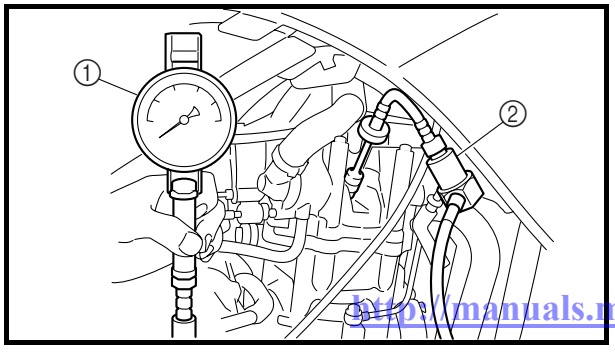

5. Install:
   • compression gauge ①
   • adaptor (compression gauge) ②

Compression gauge
90890-03081
Adaptor (compression gauge)
90890-04082

http://manuals.magnamaniac.com

6. Measure:
   • compression pressure
   Out of specification → Refer to steps (c) and (d).

Compression pressure (at sea level)
Minimum
600 kPa (6.0 kg/cm², 85.3 psi)
Standard
650 kPa (6.5 kg/cm², 92.4 psi)
Maximum
700 kPa (7.0 kg/cm², 99.6 psi)

▼▼▼▼▼▼▼▼▼▼▼▼▼▼▼▼▼▼▼▼▼▼▼▼▼▼▼▼▼▼▼▼▼▼

a. Set the main switch to "ON" and the engine stop switch to "◯".
b. With the throttle wide open, crank the engine until the reading on the compression gauge stabilizes.

⚠ WARNING

To prevent sparking, ground the spark plug lead before cranking the engine.

c. If the compression pressure is above the maximum specification, check the cylinder head, valve surfaces, and piston crown for carbon deposits.
   Carbon deposits → Eliminate.
d. If the compression pressure is below the minimum specification, pour a teaspoonful of engine oil into the spark plug bore and measure it again.
   Refer to the following table.

Compression pressure (with oil applied into the cylinder)	
Reading	**Diagnosis**
Higher than without oil	**Piston ring(s) worn or damaged → Repair.**
Same as without oil	**Piston, valves, cylinder head gasket or piston possibly defective → Repair.**

▲▲▲▲▲▲▲▲▲▲▲▲▲▲▲▲▲▲▲▲▲▲▲▲▲▲▲▲▲▲▲▲▲▲

http://manuals.magnamaniac.com

7. Install:
   • spark plug — 13 Nm (1.3 m · kg, 9.4 ft · lb)
8. Connect:
   • spark plug cap

EAS00069
CHECKING THE ENGINE OIL LEVEL

1. Stand the motorcycle on a level surface.

NOTE:
- Place the motorcycle on a suitable stand.
- Make sure the motorcycle is upright.

2. Start the engine, warm it up for 10 ~ 15 minutes, and then turn it off.
3. Check:
   • engine oil level
   The engine oil level should be between the minimum level mark ⓐ and maximum level mark ⓑ.
   Below the minimum level mark → Add the recommended engine oil to the proper level.

NOTE:
- Before checking the engine oil level, wait a few minutes until the oil has settled.
- Do not screw the dipstick ① in when checking the oil level.

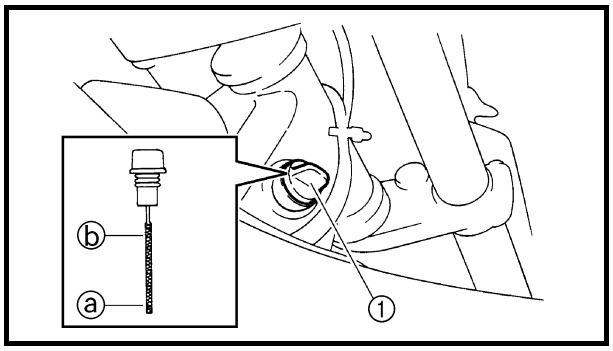

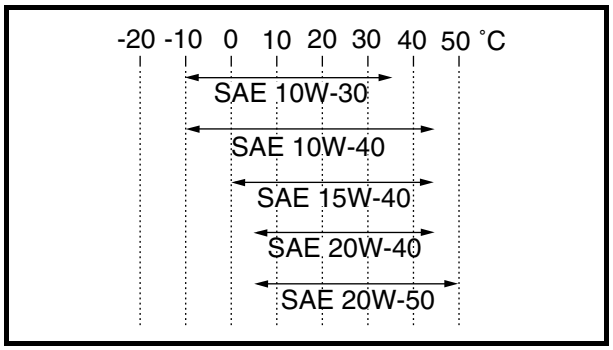

Recommended oil
Refer to the chart for the engine oil grade which is best suited for certain atmospheric temperatures.
API standard
SE, SF, SG or higher grade

CAUTION:
- **Engine oil also lubricates the clutch and the wrong oil types or additives could cause clutch slippage. Therefore, do not add any chemical additives or use engine oils with a grade of CD ⓒ or higher and do not use oils labeled "ENERGY CONSERVING II" ⓓ or higher.**
- **Do not allow foreign materials to enter the crankcase.**

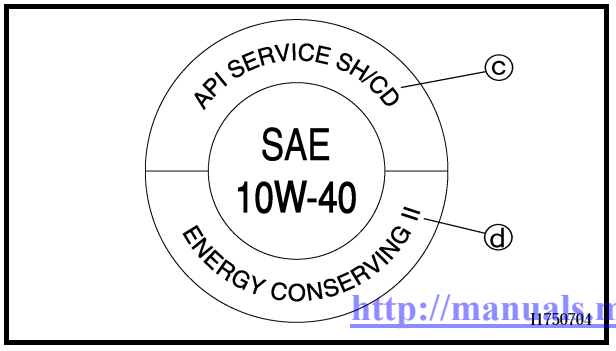

http://manuals.magnamac.com

4. Start the engine, warm it up for several minutes, and then turn it off.
5. Check the engine oil level again.

NOTE:
Before checking the engine oil level, wait a few minutes until the oil has settled.

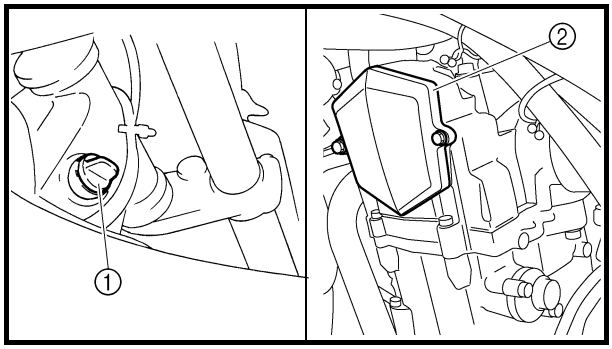

EAS00076
CHANGING THE ENGINE OIL

1. Start the engine, warm it up for several minutes, and then turn it off.
2. Place a container under the engine.
3. Remove:
   - engine oil filler cap ①
   - camshaft sprocket cover ②

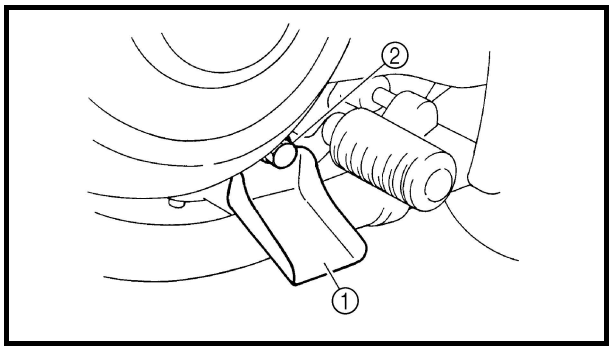

4. Install the engine oil drain attachment ① under the engine oil drain bolt of the crankcase.

NOTE:
"engine oil drain attachment" is a part of the owner's tool kit.

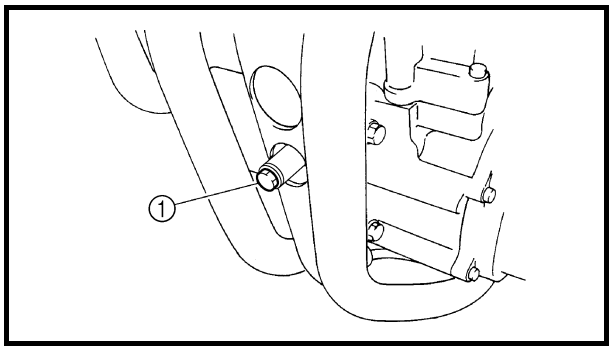

5. Remove:
   - engine oil drain bolt (crankcase) ②
     (along with the gasket)
6. Remove:
   - engine oil drain bolt (oil tank) ①
     (along with the gasket)

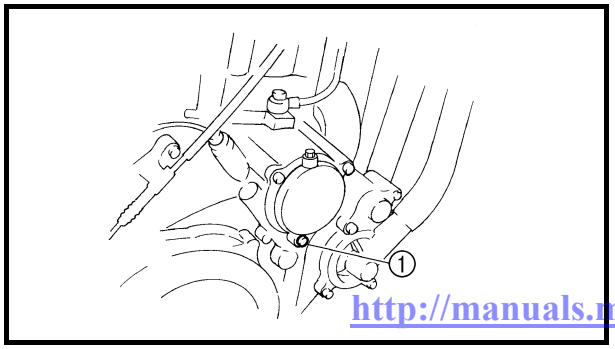

7. Remove:
   - oil filter element drain bolt ①
8. Drain:
   - engine oil
     (completely from the crankcase and the oil tank)

http://manuals.magnamaniac.com

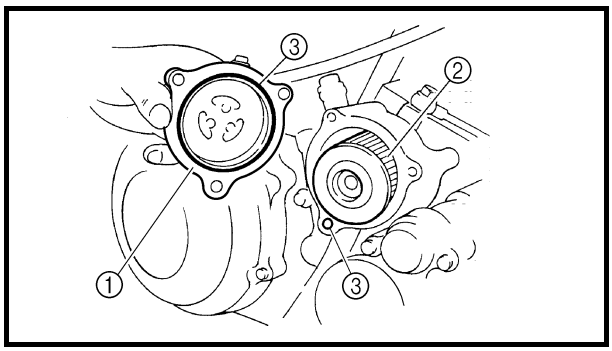

9. If the oil filter element is also to be replaced, perform the following procedure.

▼▼▼▼▼▼▼▼▼▼▼▼▼▼▼▼▼▼▼▼▼▼▼▼▼▼▼▼▼▼▼▼

a. Remove the oil filter element cover ① and oil filter element ②.
b. Check the O-rings ③ and replace them if they are cracked or damaged.
c. Install the new oil filter element and the oil filter element cover.

Oil filter element cover bolt
10 Nm (1.0 m · kg, 7.2 ft · lb)

▲▲▲▲▲▲▲▲▲▲▲▲▲▲▲▲▲▲▲▲▲▲▲▲▲▲▲▲▲▲▲▲

10. Check:
- engine oil drain bolt gasket
  Damage → Replace.

11. Install:
- engine oil drain bolt (crankcase)
  (along with the gasket)
  30 Nm (3.0 m · kg, 22 ft · lb)
- engine oil drain bolt (oil tank)
  (along with the gasket)
  18 Nm (1.8 m · kg, 13 ft · lb)
- oil filter element drain bolt
  10 Nm (1.0 m · kg, 7.2 ft · lb)

12. Fill:
- oil tank
  (with the specified amount of the recommended engine oil)

CAUTION:

The engine oil tank must be filled with engine oil in two steps. First, fill the engine oil tank with 1.9 L (1.67 Imp qt, 2.00 US qt) of the recommended engine oil. Then, start the engine, race it five or six times, turn it off, and then add the remainder of the engine oil.

Quantity
Total amount
2.90 L (2.55 Imp qt, 3.07 US qt)
Without oil filter element replacement
2.50 L (2.20 Imp qt, 2.64 US qt)
With oil filter element replacement
2.60 L (2.29 Imp qt, 2.75 US qt)

http://manuals.magnamaniac.com

13. Install:
    - engine oil filler cap
    - camshaft sprocket cover

    10 Nm (1.0 m · kg, 7.2 ft · lb)
14. Start the engine, warm it up for several minutes, and then turn it off.
15. Check:
    - engine
      (for engine oil leaks)
16. Check:
    - engine oil level
      Refer to “CHECKING THE ENGINE OIL LEVEL”.

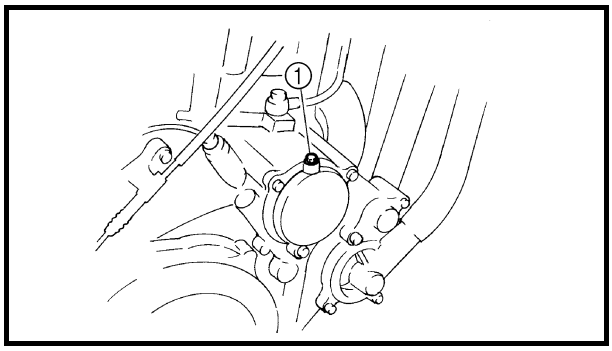

17. Check:
    - engine oil pressure

▼▼▼▼▼▼▼▼▼▼▼▼▼▼▼▼▼▼▼▼▼▼▼▼▼▼▼▼▼▼▼▼

a. Slightly loosen the bleed bolt ①.
b. Start the engine and keep it idling until engine oil starts to seep from the bleed bolt. If no engine oil comes out after one minute, turn the engine off so that it will not seize.
c. Check the engine oil passages, the oil filter element, and the oil pump for damage or leakage. Refer to “OIL PUMP” in chapter 5.
d. Start the engine after correcting the problem(s) and check the engine oil pressure again.
e. Tighten the bleed bolt to the specified torque.

Bleed bolt
5 Nm (0.5 m · kg, 3.6 ft · lb)

▲▲▲▲▲▲▲▲▲▲▲▲▲▲▲▲▲▲▲▲▲▲▲▲▲▲▲▲▲▲▲▲

http://manuals.magnamaniac.com

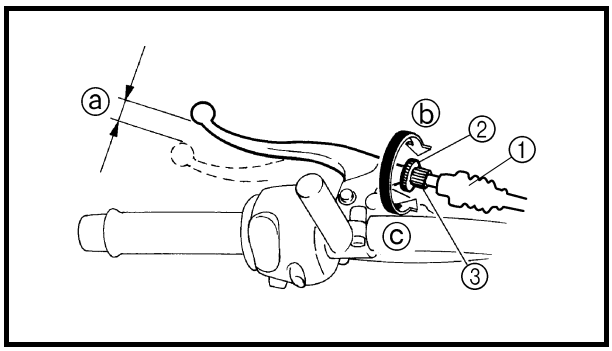

EAS00078
ADJUSTING THE CLUTCH CABLE FREE PLAY

1. Check:
   • clutch cable free play ⓐ
   Out of specification → Adjust.

Clutch cable free play (at the end of the clutch lever)
10.0 ~ 15.0 mm (0.39 ~ 0.59 in)

2. Adjust:
   • clutch cable free play

▼▼▼▼▼▼▼▼▼▼▼▼▼▼▼▼▼▼▼▼▼▼▼▼▼▼▼▼▼▼▼▼▼▼

Handlebar end

a. Slide back the rubber cover ①.
b. Loosen the locknut ②.
c. Turn the adjusting bolt ③ in direction ⓑ or ⓒ until the specified clutch cable free play is obtained.

Direction ⓑ	**Clutch cable free play is increased.**
Direction ⓒ	**Clutch cable free play is decreased.**

d. Tighten the locknut.
e. Slide the rubber cover to its original position.

NOTE:
If the specified clutch cable free play cannot be obtained on the handlebar end of the cable, adjust the free play at the engine end of the cable using the adjusting nut.

Engine end

a. Loosen the locknut ①.
b. Turn the adjusting nut ② in direction ⓐ or ⓑ until the specified clutch cable free play is obtained.

Direction ⓐ	**Clutch cable free play is increased.**
Direction ⓑ	**Clutch cable free play is decreased.**

c. Tighten the locknuts.

▲▲▲▲▲▲▲▲▲▲▲▲▲▲▲▲▲▲▲▲▲▲▲▲▲▲▲▲▲▲▲▲▲▲

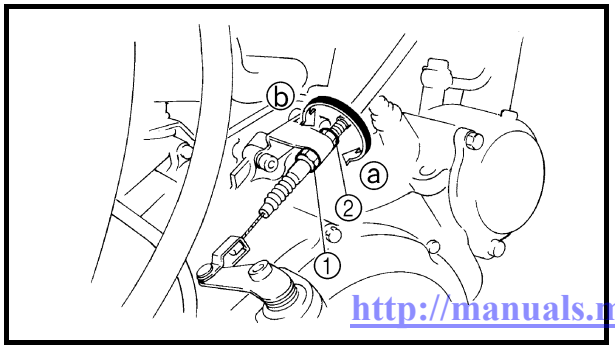

http://manuals.magnamaniac.com

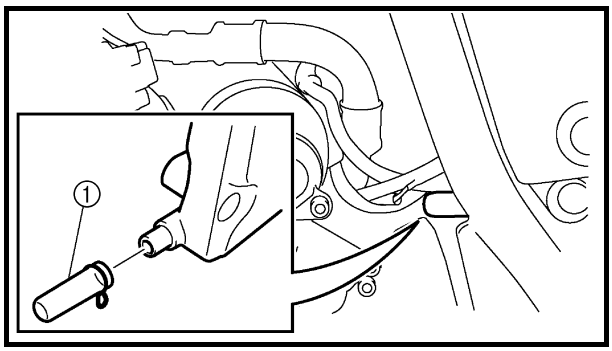

EAS00086
CHECKING THE AIR FILTER ELEMENT

NOTE:
There is a check hose ① at the bottom of the air filter case. If dust and/or water collects in this hose, clean the air filter element and air filter case.

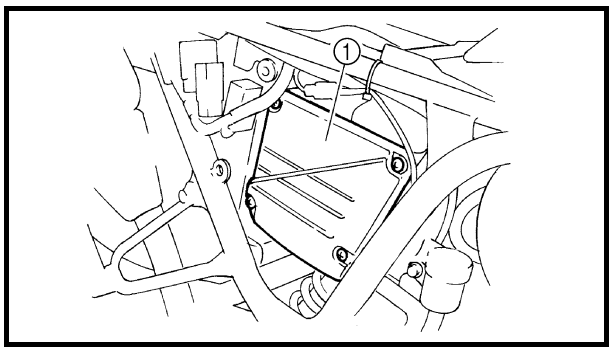

1. Remove:
   - seat
   - right side panel
   Refer to “COWLING AND COVER”.
2. Remove:
   - air filter case cover (right) ①

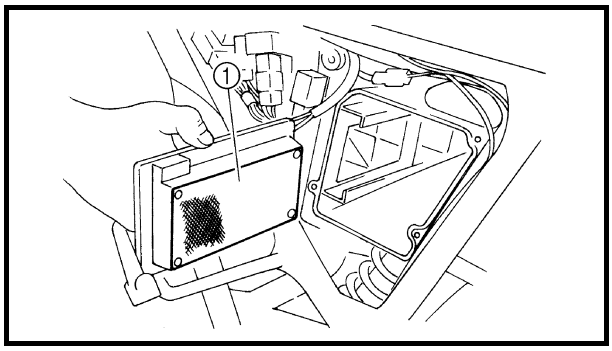

3. Remove:
   - air filter element ①
4. Check:
   - air filter element
   Damage → Replace.

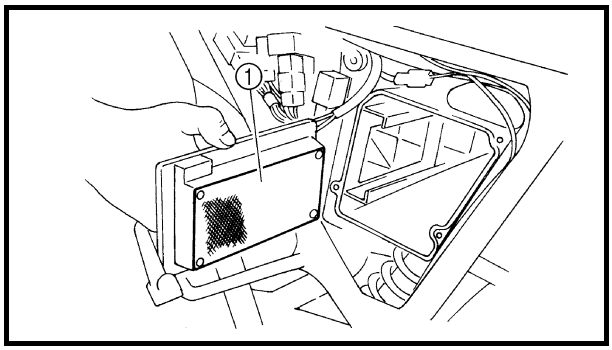

5. Install:
   - air filter element ①
   - air filter case cover (right)

CAUTION:
Never operate the engine without the air filter element installed. Unfiltered air will cause rapid wear of engine parts and may damage the engine. Operating the engine without the air filter element will also affect the throttle body tuning, leading to poor engine performance and possible overheating.

NOTE:
Insert the air filter element into the air filter case as shown.

http://manuals.magnamaniac.com

6. Install:
   - right side panel
   - seat
   Refer to “COWLING AND COVER”.

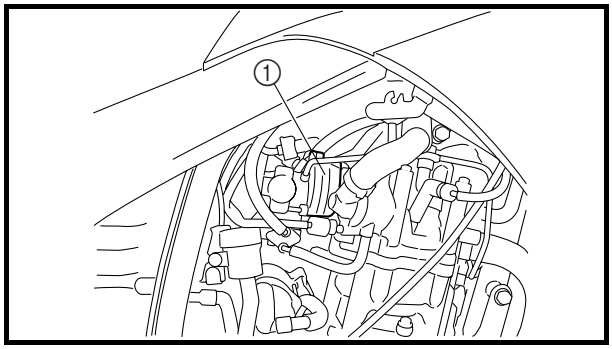

EAS00094
CHECKING THE THROTTLE BODY JOINT

1. Check:
   - throttle body joint ①
   Cracks/damage → Replace.
   Refer to “FUEL INJECTION SYSTEM” in chapter 7.

EAS00096
CHECKING THE FUEL HOSE

1. Remove:
   - seat
   - side panels (left and right)
   Refer to “COWLING AND COVER”.
   - fuel tank
   Refer to “FUEL TANK”.

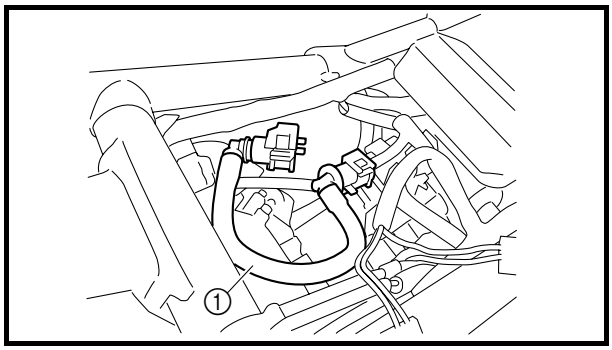

2. Check:
   - fuel hose ①
   Cracks/damage → Replace.
   Loose connection → Connect properly.
3. Install:
   - fuel tank
   Refer to “FUEL TANK”.
   - side panels (left and right)
   - seat
   Refer to “COWLING AND COVER”.

http://manuals.magnamaniac.com

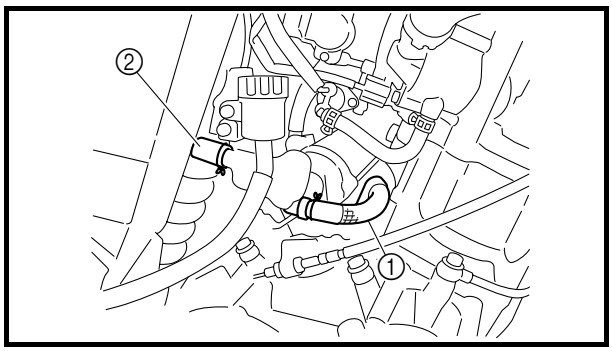

EAS00098
CHECKING THE BREATHER HOSE

1. Check:
   - crankcase-to-crankcase-breather-chamber hose ①
   - air-filter-to-crankcase-breather-chamber hose ②
     Cracks/damage → Replace.
     Loose connection → Connect properly.

CAUTION:

Make sure the breather hoses are routed correctly.

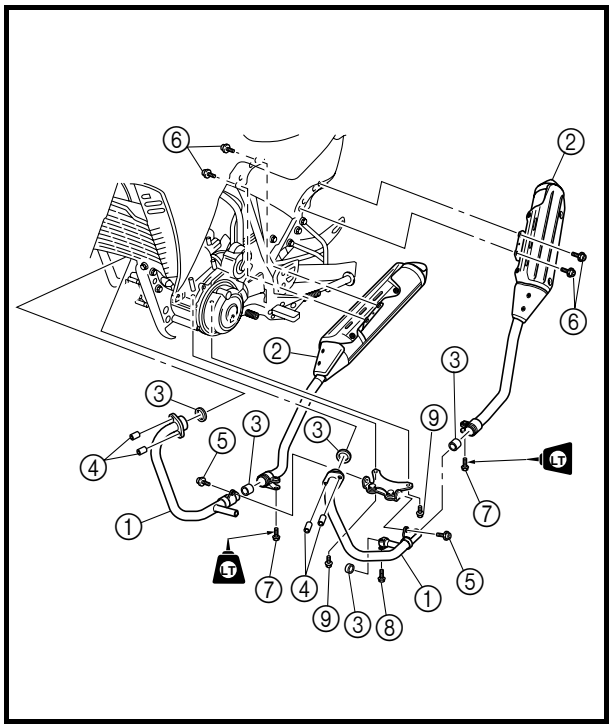

EAS00099
CHECKING THE EXHAUST SYSTEM

The following procedure applies to all of the exhaust pipes and gaskets.

1. Check:
   - exhaust pipes ①
   - mufflers ②
     Cracks/damage → Replace.
   - gaskets ③
     Exhaust gas leaks → Replace.
2. Check:
   - tightening torques

Exhaust pipe nut ④
20 Nm (2.0 m · kg, 14 ft · lb)
Exhaust pipe bolt ⑤
27 Nm (2.7 m · kg, 19 ft · lb)
Muffler bolt ⑥
27 Nm (2.7 m · kg, 19 ft · lb)
Exhaust pipe and muffler bolt ⑦
20 Nm (2.0 m · kg, 14 ft · lb)
Exhaust pipe bolt ⑧
12 Nm (1.2 m · kg, 8.7 ft · lb)
Exhaust pipe bracket bolt ⑨
23 Nm (2.3 m · kg, 17 ft · lb)

http://manuals.magnamaniac.com

EAS00102
CHECKING THE COOLANT LEVEL

1. Stand the motorcycle on a level surface.

NOTE:
- Place the motorcycle on a suitable stand.
- Make sure the motorcycle is upright.

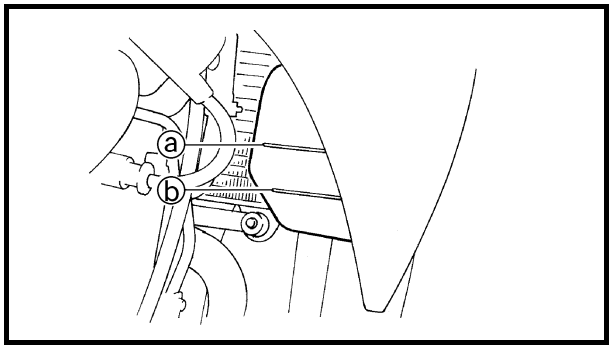

2. Check:
   - coolant level

   The coolant level should be between the maximum level mark ⓐ and minimum level mark ⓑ.

   Below the minimum level mark → Add the recommended coolant to the proper level.

CAUTION:
- **Adding water instead of coolant lowers the antifreeze content of the coolant. If water is used instead of coolant check, and if necessary, correct the antifreeze concentration of the coolant.**
- **Use only distilled water. However, if distilled water is not available, soft water may be used.**

3. Start the engine, warm it up for several minutes, and then turn it off.
4. Check:
   - coolant level

NOTE:
Before checking the coolant level, wait a few minutes until it settles.

EAS00104
CHECKING THE COOLING SYSTEM

1. Remove:
   - seat
   - side panels (left and right)

     Refer to “COWLING AND COVER”.
   - fuel tank

     Refer to “FUEL TANK”.

http://manuals.magnamaniac.com

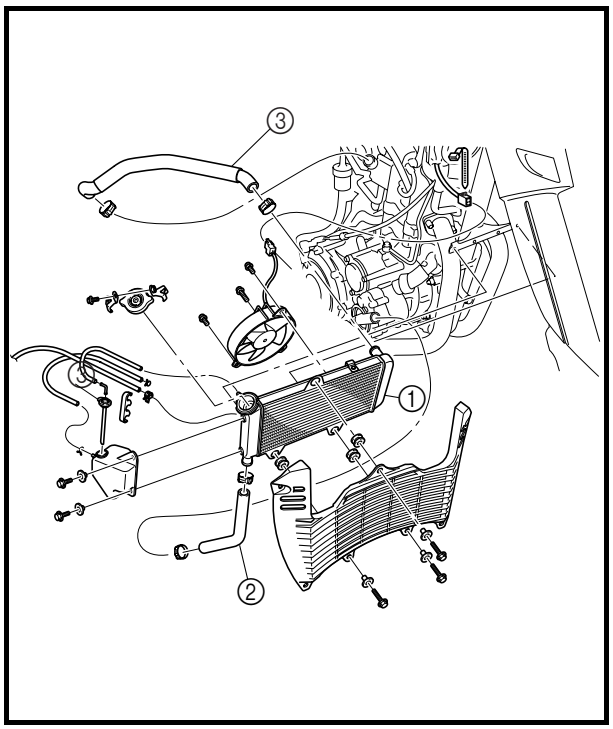

2. Check:
   - radiator ①
   - radiator outlet hose ②
   - radiator inlet hose ③
   - water pump assembly ④
   - water pump outlet pipe ⑤
   - water pump outlet hose ⑥

   Cracks/damage → Replace.
   Refer to “COOLING SYSTEM” in chapter 6.
3. Install:
   - fuel tank
     Refer to “FUEL TANK”.
   - side panels (left and right)
   - seat
     Refer to “COWLING AND COVER”.

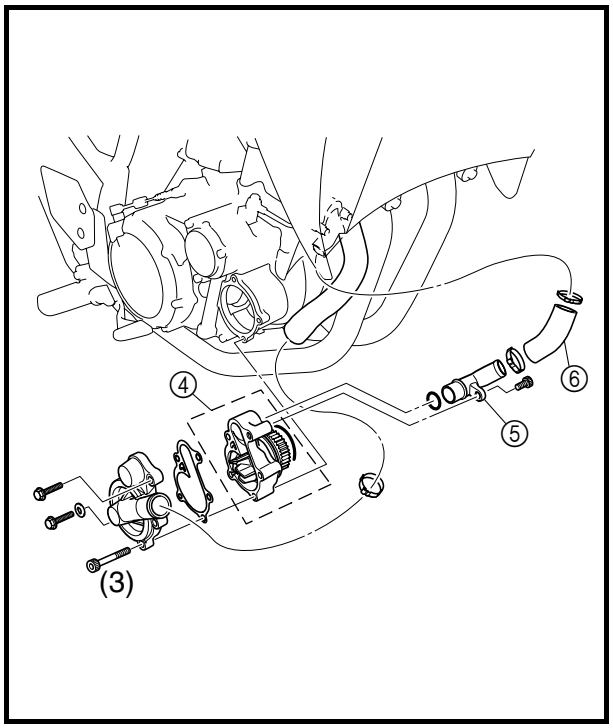

EAS00105
CHANGING THE COOLANT

1. Remove:
   - seat
   - right side panel
     Refer to “COWLING AND COVER”.
   - fuel tank right side cover
     Refer to “FUEL TANK”.

http://manuals.magnamaniac.com

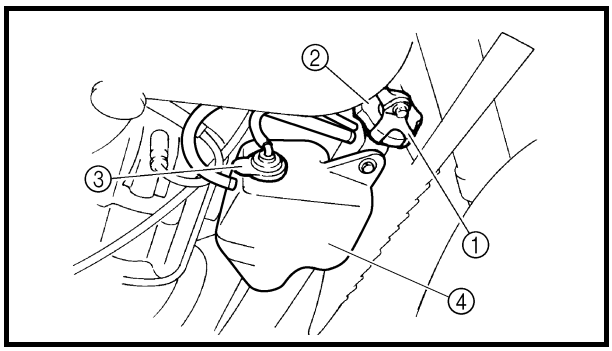

2. Remove:
   - radiator cap retainer ①
   - radiator cap ②

⚠ WARNING

A hot radiator is under pressure. Therefore, do not remove the radiator cap when the engine is hot. Scalding hot fluid and steam may be blown out, which could cause serious injury. When the engine has cooled, open the radiator cap as follows:
Place a thick rag or a towel over the radiator cap and slowly turn the radiator cap counterclockwise toward the detent to allow any residual pressure to escape. When the hissing sound has stopped, press down on the radiator cap and turn it counterclockwise to remove.

3. Remove:
   - coolant reservoir cap ③
   - coolant reservoir ④
4. Drain:
   - coolant
     (from the coolant reservoir)
5. Install:
   - coolant reservoir

5 Nm (0.5 m · kg, 3.6 ft · lb)

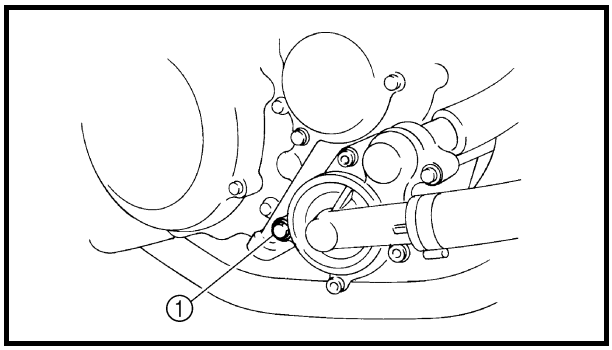

6. Remove:
   - coolant drain bolt ①
     (along with the copper washer)
7. Drain:
   - coolant
     (from the engine and radiator)

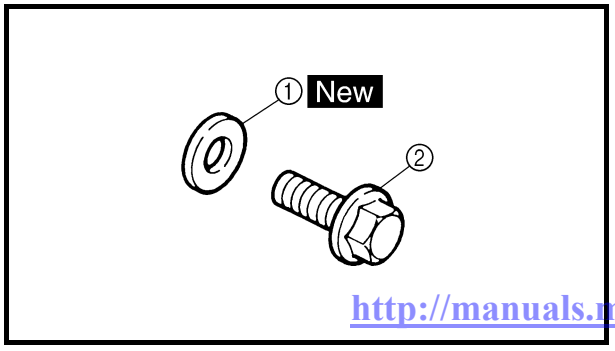

8. Check:
   - copper washer ① New
   - coolant drain bolt ②
     Damage → Replace.
9. Install:
   - coolant drain bolt

10 Nm (1.0 m · kg, 7.2 ft · lb)

http://manuals.magnamaniac.com

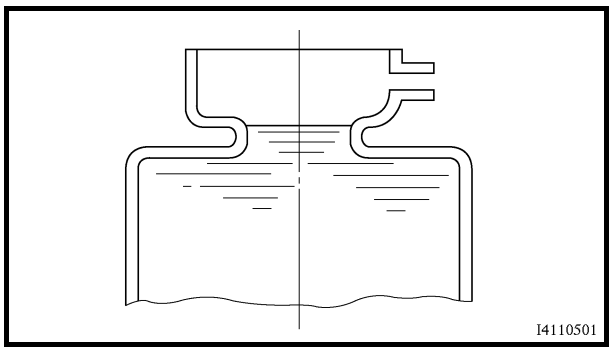

10.Fill:
- cooling system
  (with the specified amount of the recommended coolant)

Recommended antifreeze
High-quality ethylene glycol antifreeze containing corrosion inhibitors for aluminum engines
Mixing ratio
1:1 (antifreeze:water)
Quantity
Total amount
1.00 L (0.88 Imp qt, 1.06 US qt)
Coolant reservoir capacity
0.25 L (0.22 Imp qt, 0.26 US qt)
From minimum to maximum level mark
0.15 L (0.13 Imp qt, 0.16 US qt)

Handling notes for coolant
Coolant is potentially harmful and should be handled with special care.

⚠ WARNING
- **If coolant splashes in your eyes, thoroughly wash them with water and consult a doctor.**
- **If coolant splashes on your clothes, quickly wash it away with water and then with soap and water.**
- **If coolant is swallowed, induce vomiting and get immediate medical attention.**

CAUTION:
- **Adding water instead of coolant lowers the antifreeze content of the coolant. If water is used instead of coolant, check and if necessary, correct the antifreeze concentration of the coolant.**
- **Use only distilled water. However, if distilled water is not available, soft water may be used.**
- **If coolant comes into contact with painted surfaces, immediately wash them with water.**
- **Do not mix different types of antifreeze.**

http://manuals.magnamaniac.com

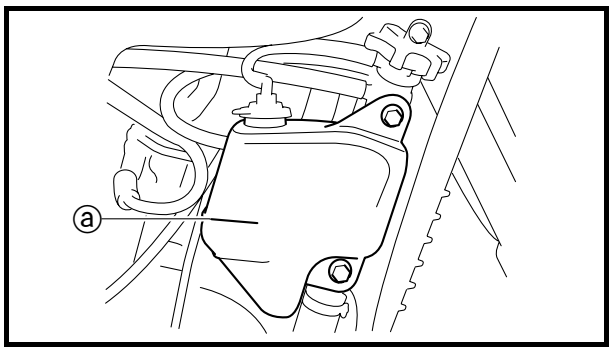

11. Install:
- radiator cap
- radiator cap retainer

7 Nm (0.7 m · kg, 5.1 ft · lb)

12. Fill:
- coolant reservoir
  (with the recommended coolant to the maximum level mark ⓐ)

13. Install:
- coolant reservoir cap

14. Start the engine, warm it up for several minutes, and then turn it off.
15. Check:
- coolant level
  Refer to "CHECKING THE COOLANT LEVEL".

NOTE:
Before checking the coolant level, wait a few minutes until the coolant has settled.

16. Install:
- fuel tank right side cover
  Refer to "FUEL TANK".
- right side panel
- seat
  Refer to "COWLING AND COVER".

http://manuals.magnamaniac.com

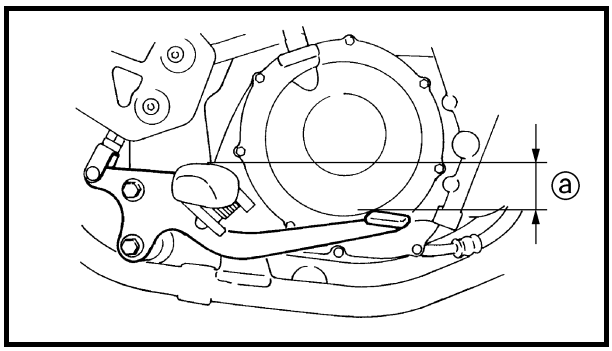

EAS00110
CHASSIS
ADJUSTING THE REAR BRAKE PEDAL

1. Check:
   - brake pedal position
     (distance ⓐ from the top of the rider footrest to the top of the brake pedal)
     Out of specification → Adjust.

Brake pedal position (below the top of the rider footrest)
12.0 mm (0.47 in)

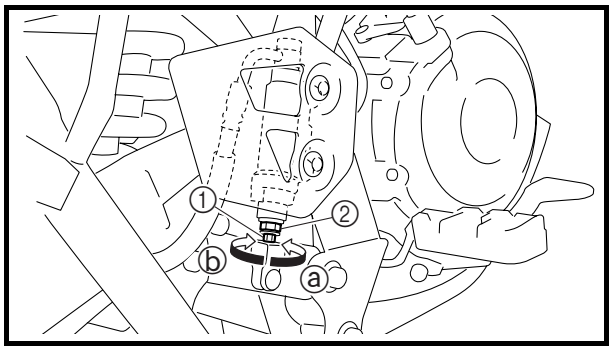

2. Adjust:
   - brake pedal position

▼▼▼▼▼▼▼▼▼▼▼▼▼▼▼▼▼▼▼▼▼▼▼▼▼▼▼▼▼▼▼▼▼▼

a. Loosen the locknut ①.
b. Turn the adjusting bolt ② in direction ⓐ or ⓑ until the specified brake pedal position is obtained.

Direction ⓐ	**Brake pedal is raised.**
Direction ⓑ	**Brake pedal is lowered.**

c. Tighten the locknut ① to the specified torque.

Locknut
18 Nm (1.8 m · kg, 13 ft · lb)

⚠ WARNING

A soft or spongy feeling in the brake pedal can indicate the presence of air in the brake system. Before the vehicle is operated, the air must be removed by bleeding the brake system. Air in the brake system will considerably reduce braking performance and could result in loss of control and possibly an accident. Therefore, check and, if necessary, bleed the brake system.

CAUTION:

After adjusting the brake pedal position, make sure there is no brake drag.

▲▲▲▲▲▲▲▲▲▲▲▲▲▲▲▲▲▲▲▲▲▲▲▲▲▲▲▲▲▲▲▲▲▲

http://manuals.magnamaniac.com

3. Adjust:
   • rear brake light switch
   Refer to “ADJUSTING THE REAR BRAKE LIGHT SWITCH”.

EAS00115
CHECKING THE BRAKE FLUID LEVEL

1. Stand the motorcycle on a level surface.

NOTE:
- Place the motorcycle on a suitable stand.
- Make sure the motorcycle is upright.

A

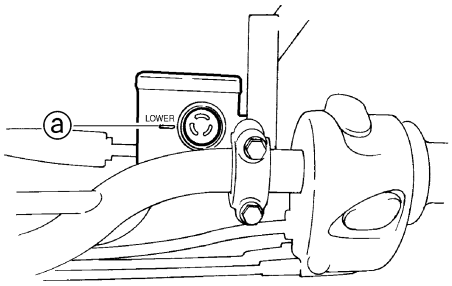

B

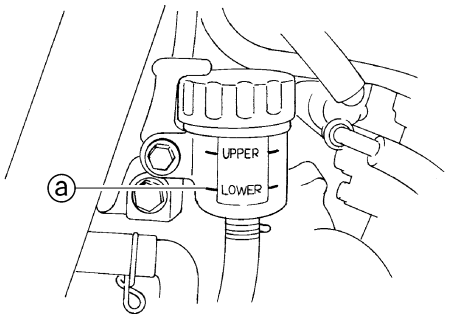

2. Check:
   • brake fluid level
   Below the minimum level mark ⓐ → Add the recommended brake fluid to the proper level.

	Recommended brake fluid **DOT 4**

A Front brake
B Rear brake

⚠ WARNING

- **Use only the designated brake fluid. Other brake fluids may cause the piston seals to deteriorate, causing leakage and poor brake performance.**
- **Refill with the same type of brake fluid that is already in the system. Mixing brake fluids may result in a harmful chemical reaction, leading to poor brake performance.**
- **When refilling, be careful that water does not enter the brake fluid reservoir. Water will significantly lower the boiling point of the brake fluid and could cause vapor lock.**

CAUTION:

Brake fluid may damage painted surfaces and plastic parts. Therefore, always clean up any spilt brake fluid immediately.

NOTE:

In order to ensure a correct reading of the brake fluid level, make sure the top of the brake fluid reservoir is horizontal.

http://manuals.magnamaniac.com

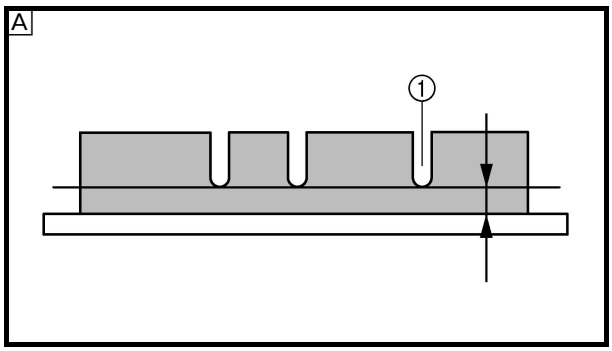

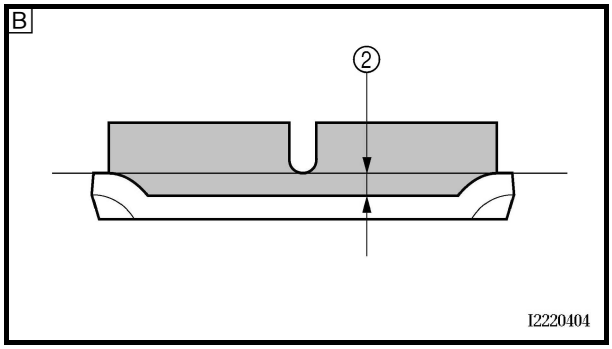

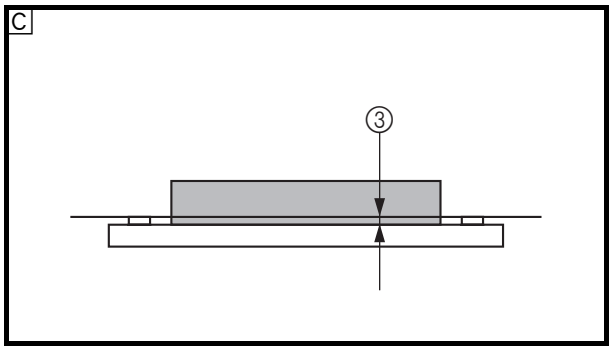

EAS00118

CHECKING THE FRONT AND REAR BRAKE PADS AND BRAKE PAD PINS

The following procedure applies to all of the brake pads.

1. Operate the brake.
2. Check:
   - front brake pads

   XT660R

   Wear indicator grooves ① have almost disappeared → Replace the brake pads as a set.

   XT660X

   Wear limit ② reached → Replace the brake pads as a set.

   Refer to "REPLACING THE FRONT BRAKE PADS" in chapter 4.
3. Measure:
   - rear brake pads

   Wear limit ③ reached → Replace the brake pads as a set.

   Refer to "REPLACING THE REAR BRAKE PADS" in chapter 4.

	Rear brake pad wear limit **1.0 mm (0.04 in)**

4. Check:
   - brake pad pins

   Damage/wear → Replace.

A Front brake (XT660R)
B Front brake (XT660X)
C Rear brake (XT660R/XT660X)

EAS00128

ADJUSTING THE REAR BRAKE LIGHT SWITCH

NOTE:

The rear brake light switch is operated by movement of the brake pedal. The rear brake light switch is properly adjusted when the brake light comes on just before the braking effect starts.

http://manuals.magnamaxx.com

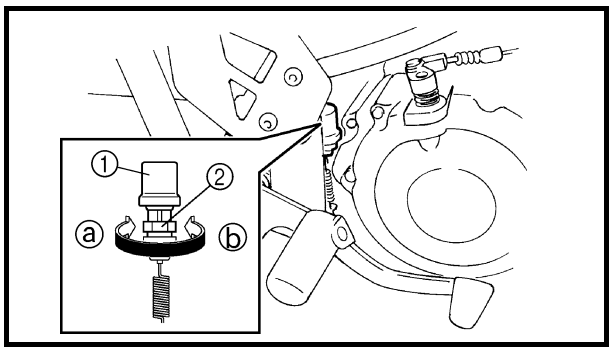

1. Check:
   - rear brake light operation timing
     Incorrect → Adjust.
2. Adjust:
   - rear brake light operation timing

▼▼▼▼▼▼▼▼▼▼▼▼▼▼▼▼▼▼▼▼▼▼▼▼▼▼▼▼▼▼▼▼▼▼

a. Hold the main body ① of the rear brake light switch so that it does not rotate and turn the adjusting nut ② in direction ⓐ or ⓑ until the rear brake light comes on at the proper time.

Direction ⓐ	**Brake light comes on sooner.**
Direction ⓑ	**Brake light comes on later.**

▲▲▲▲▲▲▲▲▲▲▲▲▲▲▲▲▲▲▲▲▲▲▲▲▲▲▲▲▲▲▲▲▲▲

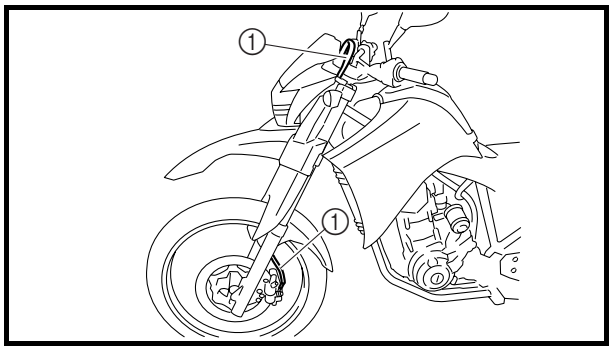

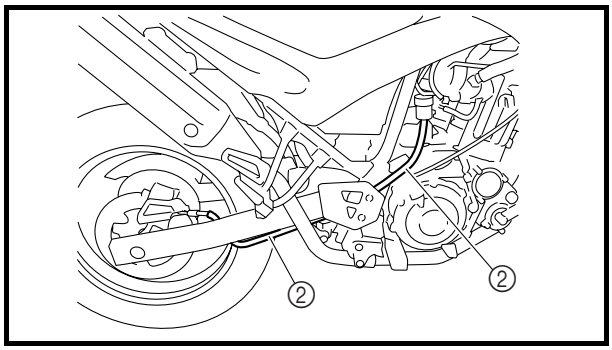

EAS00131

CHECKING THE FRONT AND REAR BRAKE HOSES

The following procedure applies to all of the brake hoses and brake hose clamps.

1. Check:
   - front brake hose ①
   - rear brake hoses ②
     Cracks/damage/wear → Replace.
2. Check:
   - brake hose clamp
     Loose → Tighten the clamp bolt.
3. Hold the motorcycle upright and apply the brake several times.
4. Check:
   - brake hoses
     Brake fluid leakage → Replace the damaged hose.
     Refer to “FRONT AND REAR BRAKES” in chapter 4.

http://manuals.magnamaniac.com

EAS00134
BLEEDING THE HYDRAULIC BRAKE SYSTEM

⚠ WARNING

Bleed the hydraulic brake system whenever:
- **the system is disassembled.**
- **a brake hose is loosened, disconnected or replaced.**
- **the brake fluid level is very low.**
- **brake operation is faulty.**

NOTE:
- Be careful not to spill any brake fluid or allow the brake master cylinder reservoir or brake fluid reservoir to overflow.
- When bleeding the hydraulic brake system, make sure there is always enough brake fluid before applying the brake. Ignoring this precaution could allow air to enter the hydraulic brake system, considerably lengthening the bleeding procedure.
- If bleeding is difficult, it may be necessary to let the brake fluid settle for a few hours. Repeat the bleeding procedure when the tiny bubbles in the hose have disappeared.

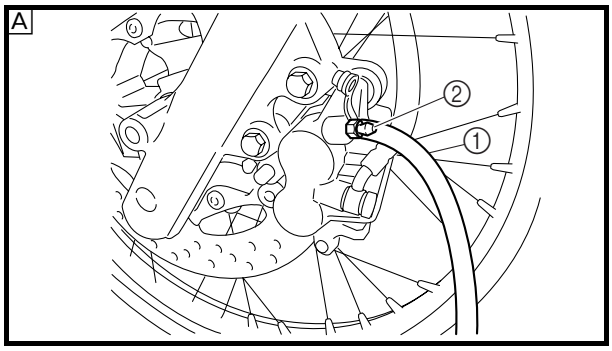

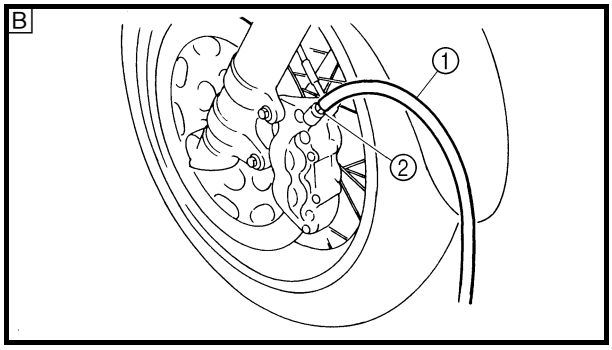

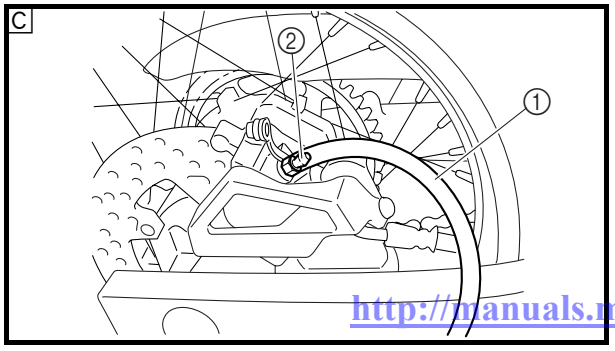

1. Bleed:
   - hydraulic brake system

▼▼▼▼▼▼▼▼▼▼▼▼▼▼▼▼▼▼▼▼▼▼▼▼▼▼▼▼▼▼▼▼

a. Fill the brake fluid reservoir to the proper level with the recommended brake fluid.
b. Install the diaphragm (brake master cylinder reservoir or brake fluid reservoir).
c. Connect a clear plastic hose ① tightly to the bleed screw ②.

A Front (XT660R)
B Front (XT660X)
C Rear (XT660R/XT660X)

d. Place the other end of the hose into a container.
e. Slowly apply the brake several times.
f. Fully pull the brake lever or fully press down the brake pedal and hold it in position.

http://manuals.magnamaniac.com

g. Loosen the bleed screw.

NOTE:
Loosening the bleed screw will release the pressure and cause the brake lever to contact the throttle grip or the brake pedal to fully extend.

h. Tighten the bleed screw, and then release the brake lever or brake pedal.
i. Repeat steps (e) to (h) until all of the air bubbles have disappeared from the brake fluid in the plastic hose.
j. Tighten the bleed screw to the specified torque.

Bleed screw
14 Nm (1.4 m · kg, 10 ft · lb)

k. Fill the brake fluid reservoir to the proper level with the recommended brake fluid.
Refer to "CHECKING THE BRAKE FLUID LEVEL".

⚠ WARNING

After bleeding the hydraulic brake system, check the brake operation.

▲▲▲▲▲▲▲▲▲▲▲▲▲▲▲▲▲▲▲▲▲▲▲▲▲▲▲▲▲▲

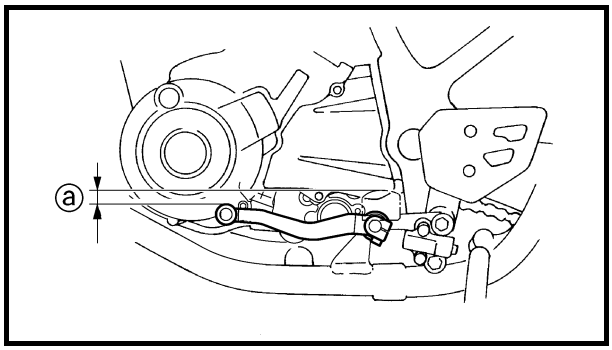

ADJUSTING THE SHIFT PEDAL

1. Check:
   - shift pedal position
     (distance ⓐ from the top of the rider footrest to the top of the shift pedal)
     Out of specification → Adjust.

Shift pedal position
(from the top of the rider footrest to the top of the shift pedal)
15.0 mm (0.59 in)

http://manuals.magnamaniac.com

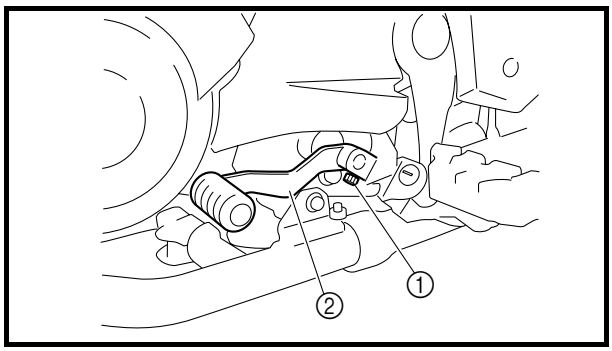

2. Adjust:
   • shift pedal position

▼▼▼▼▼▼▼▼▼▼▼▼▼▼▼▼▼▼▼▼▼▼▼▼▼▼▼▼▼▼▼▼▼▼

a. Remove the bolt ①.
b. Remove the shift pedal ②.
c. Install the shift pedal at the correct position.
d. Install the bolt, and then tighten it to the specified torque.

	Shift pedal bolt **16 Nm (1.6 m · kg, 11 ft · lb)**

▲▲▲▲▲▲▲▲▲▲▲▲▲▲▲▲▲▲▲▲▲▲▲▲▲▲▲▲▲▲▲▲▲▲

EAS00140

ADJUSTING THE DRIVE CHAIN SLACK

NOTE:

The drive chain slack must be checked at the tightest point on the chain.

CAUTION:

A drive chain that is too tight will overload the engine and other vital parts, and one that is too loose can skip and damage the swingarm or cause an accident. Therefore, keep the drive chain slack within the specified limits.

1. Stand the motorcycle on a level surface.

⚠ WARNING

Securely support the motorcycle so that there is no danger of it falling over.

NOTE:

Place the motorcycle on a suitable stand so that the rear wheel is elevated.

2. Spin the rear wheel several times and find the tightest position of the drive chain.

http://manuals.magnamaniac.com

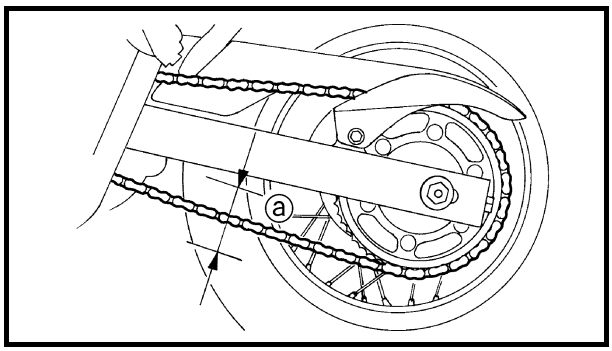

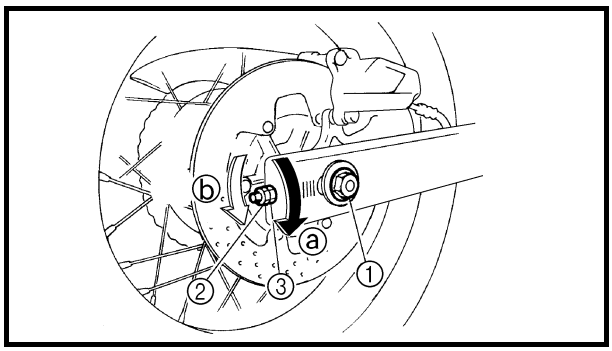

3. Check:
   • drive chain slack ⓐ
   Out of specification → Adjust.

	Drive chain slack **40.0 ~ 55.0 mm (1.57 ~ 2.17 in)**

4. Adjust:
   • drive chain slack

▼▼▼▼▼▼▼▼▼▼▼▼▼▼▼▼▼▼▼▼▼▼▼▼▼▼▼▼▼▼▼▼▼▼

a. Loosen the wheel axle nut ①.
b. Loosen both locknuts ②.
c. Turn both adjusting nuts ③ in direction ⓐ or ⓑ until the specified drive chain slack is obtained.

Direction ⓐ	**Drive chain is tightened.**
Direction ⓑ	**Drive chain is loosened.**

NOTE:
To maintain the proper wheel alignment, adjust both sides evenly.

d. Tighten both locknuts to the specified torque.

	Locknut **16 Nm (1.6 m · kg, 11 ft · lb)**

e. Tighten the wheel axle nut to the specified torque.

	Wheel axle nut **105 Nm (10.5 m · kg, 75 ft · lb)**

▲▲▲▲▲▲▲▲▲▲▲▲▲▲▲▲▲▲▲▲▲▲▲▲▲▲▲▲▲▲▲▲▲▲

http://manuals.magnamaniac.com

EAS00142
LUBRICATING THE DRIVE CHAIN

The drive chain consists of many interacting parts. If the drive chain is not maintained properly, it will wear out quickly. Therefore, the drive chain should be serviced, especially when the motorcycle is used in dusty areas.
This motorcycle has a drive chain with small rubber O-rings between each side plate. Steam cleaning, high-pressure washing, certain solvents, and the use of a coarse brush can damage these O-rings. Therefore, use only kerosene to clean the drive chain. Wipe the drive chain dry and thoroughly lubricate it with engine oil or chain lubricant that is suitable for O-ring chains. Do not use any other lubricants on the drive chain since they may contain solvents that could damage the O-rings.

Recommended lubricant
Engine oil or chain lubricant suitable for O-ring chains

EAS00146
CHECKING AND ADJUSTING THE STEERING HEAD

1. Stand the motorcycle on a level surface.

⚠ WARNING

Securely support the motorcycle so that there is no danger of it falling over.

NOTE:
Place the motorcycle on a suitable stand so that the front wheel is elevated.

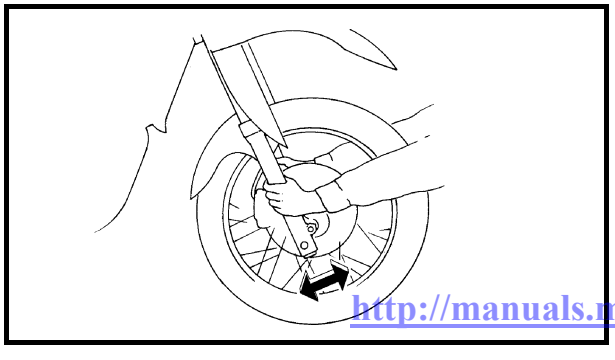

2. Check:
   - steering head
     Grasp the bottom of the front fork legs and gently rock the front fork.
     Binding/looseness → Adjust the steering head.

http://manuals.magnamaniac.com

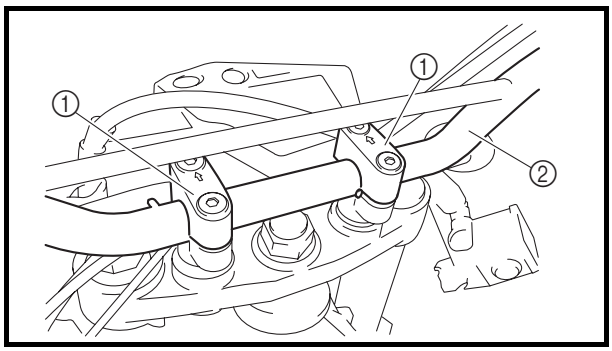

3. Remove:
   - handlebar protector cover (XT660X)
   - handlebar protector (XT660X)
   - handlebar holder caps
   - upper handlebar holders ①
   - handlebar ②

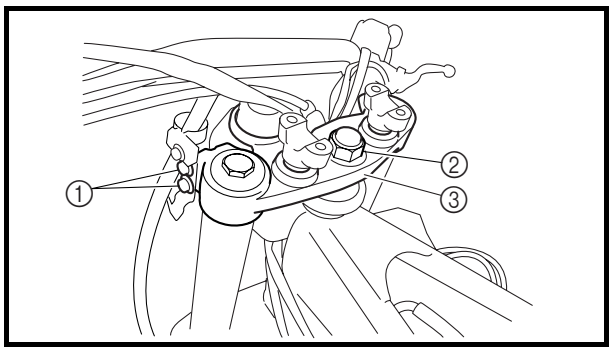

4. Loosen:
   - upper bracket pinch bolts ①
5. Remove:
   - steering stem nut ②
   - washer
   - upper bracket ③

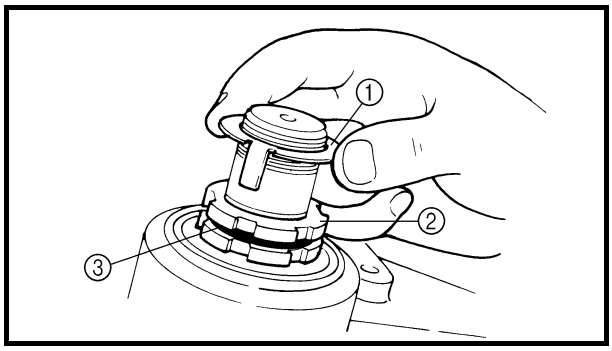

6. Adjust:
   - steering head

▼▼▼▼▼▼▼▼▼▼▼▼▼▼▼▼▼▼▼▼▼▼▼▼▼▼▼▼▼▼▼▼▼▼

a. Remove the lock washer ①, the upper ring nut ②, and the rubber washer ③.
b. Loosen the lower ring nut ④, and then tighten it to the specified torque with a steering nut wrench ⑤.

NOTE:
Set the torque wrench at a right angle to the steering nut wrench.

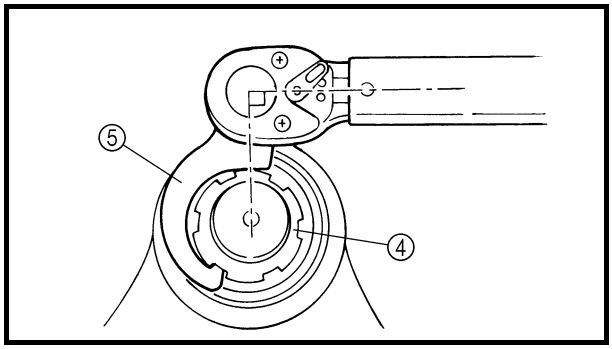

	Steering nut wrench **90890-01403**
	Lower ring nut (initial tightening torque) **43 Nm (4.3 m · kg, 31 ft · lb)**

c. Loosen the lower ring nut completely, and then tighten it to the specified torque.

⚠ WARNING

Do not overtighten the lower ring nut.

	Lower ring nut (final tightening torque) **7 Nm (0.7 m · kg, 5.1 ft · lb)**

http://manuals.magnamaniac.com

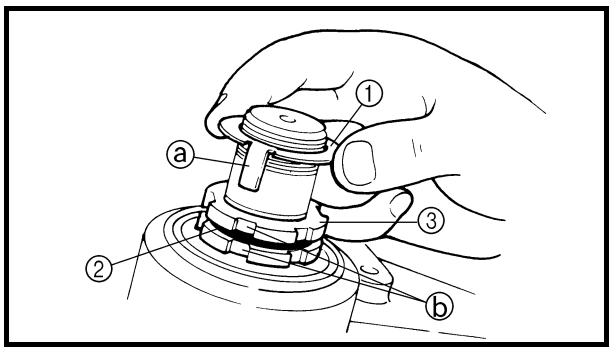

d. Check the steering head for looseness or binding by turning the front fork all the way in both directions. If any binding is felt, remove the lower bracket and check the upper and lower bearings.
   Refer to “STEERING HEAD” in chapter 4.
e. Install the rubber washer ②.
f. Install the upper ring nut ③.
g. Finger tighten the upper ring nut ③, and then align the slots of both ring nuts. If necessary, hold the lower ring nut and tighten the upper ring nut until their slots are aligned.
h. Install the lock washer ①.

NOTE:
Make sure the lock washer tabs ⓐ sit correctly in the ring nut slots ⓑ.

▲▲▲▲▲▲▲▲▲▲▲▲▲▲▲▲▲▲▲▲▲▲▲▲▲▲▲▲▲▲

7. Install:
   - upper bracket
   - washer
   - steering stem

   130 Nm (13.0 m · kg, 94 ft · lb)
8. Tighten:
   - upper bracket pinch bolts

   23 Nm (2.3 m · kg, 17 ft · lb)
9. Install:
   - handlebar
   - upper handlebar holders

     23 Nm (2.3 m · kg, 17 ft · lb)
   - handlebar holder caps
   - handlebar protector (XT660X)
   - handlebar protector cover (XT660X)

   Refer to “HANDLEBAR” in chapter 4.

EAS00149
CHECKING THE FRONT FORK

1. Stand the motorcycle on a level surface.

⚠ WARNING
Securely support the motorcycle so that there is no danger of it falling over.

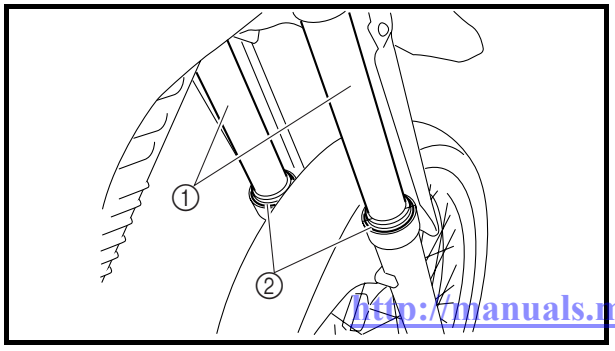

2. Check:
   - inner tubes ①
     Damage/scratches → Replace.
   - oil seals ②
     Oil leakage → Replace.

http://manuals.magnamaniac.com

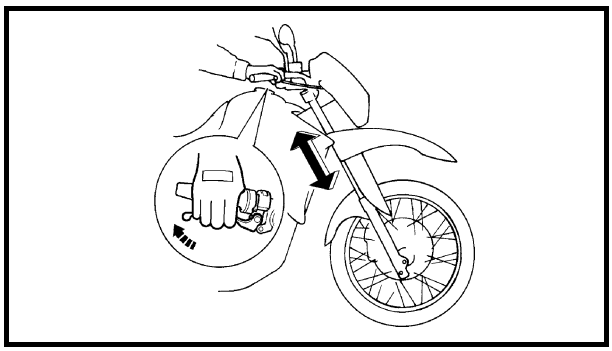

3. Hold the motorcycle upright and apply the front brake.
4. Check:
   - front fork operation
     Push down hard on the handlebar several times and check if the front fork rebounds smoothly.
     Rough movement → Repair.
     Refer to “FRONT FORK” in chapter 4.

EAS00156
ADJUSTING THE REAR SHOCK ABSORBER ASSEMBLY

⚠ WARNING

Securely support the motorcycle so that there is no danger of it falling over.

Spring preload

CAUTION:

Never go beyond the maximum or minimum adjustment positions.

1. Adjust:
   - spring preload

▼▼▼▼▼▼▼▼▼▼▼▼▼▼▼▼▼▼▼▼▼▼▼▼▼▼▼▼▼▼▼▼▼▼

a. Adjust the spring preload with the special wrench provided in the owner’s tool kit.
b. Turn the adjusting ring ① in direction ⓐ or ⓑ.
c. Align the desired position on the adjusting ring with the stopper ②.

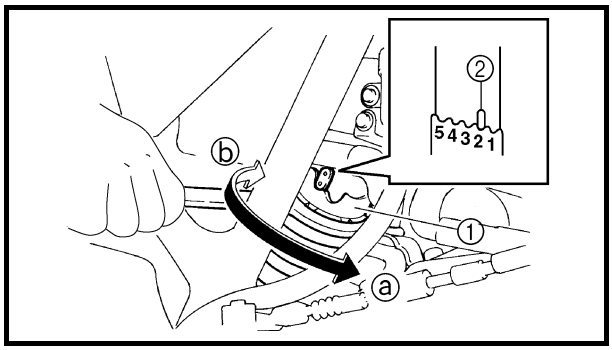

Direction ⓐ	**Spring preload is increased (suspension is harder).**
Direction ⓑ	**Spring preload is decreased (suspension is softer).**

Adjusting positions
Minimum: 1
Standard: 2
Maximum: 5

▲▲▲▲▲▲▲▲▲▲▲▲▲▲▲▲▲▲▲▲▲▲▲▲▲▲▲▲▲▲▲▲▲▲

http://manuals.magnamaniac.com

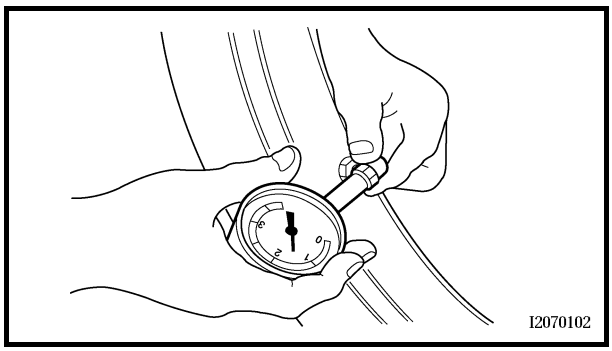

EAS00166
CHECKING THE TIRES

The following procedure applies to both of the tires.

1. Check:
   - tire pressure
     Out of specification → Regulate.

⚠ WARNING

- **The tire pressure should only be checked and regulated when the tire temperature equals the ambient air temperature.**
- **The tire pressure and the suspension must be adjusted according to the total weight (including cargo, rider, passenger and accessories) and the anticipated riding speed.**
- **Operation of an overloaded motorcycle could cause tire damage, an accident or an injury.**

NEVER OVERLOAD THE MOTORCYCLE.

XT660R

Basic weight (with oil and a full fuel tank)	**181.0 kg (399 lb)**	
Maximum load*	**186.0 kg (410 lb)**	
Cold tire pressure	**Front**	**Rear**
Up to 90 kg load*	**200 kPa (2.00 kgf/cm², 29 psi)**	**200 kPa (2.00 kgf/cm², 29 psi)**
90 kg ~ maximum load*	**200 kPa (2.00 kgf/cm², 29 psi)**	**225 kPa (2.25 kgf/cm², 33 psi)**
Off-road riding	**200 kPa (2.00 kgf/cm², 29 psi)**	**200 kPa (2.00 kgf/cm², 29 psi)**

http://manuals.magnamaniac.com

XT660X

Basic weight (with oil and a full fuel tank)	**186.0 kg (410 lb)**	
Maximum load*	**186.0 kg (410 lb)**	
Cold tire pressure	**Front**	**Rear**
Up to 90 kg load*	**210 kPa (2.10 kgf/cm², 30 psi)**	**210 kPa (2.10 kgf/cm², 30 psi)**
90 kg ~ maximum load*	**220 kPa (2.20 kgf/cm², 31 psi)**	**230 kPa (2.30 kgf/cm², 33 psi)**

* Total weight of rider, passenger, cargo and accessories

⚠ WARNING

It is dangerous to ride with a worn-out tire. When the tire tread reaches the wear limit, replace the tire immediately.

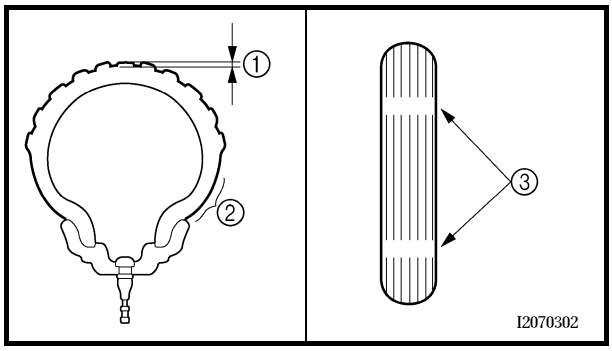

2. Check:
   - tire surfaces
     Damage/wear → Replace the tire.

Minimum tire tread depth
1.6 mm (0.063 in)

① Tire tread depth
② Sidewall
③ Wear indicator

⚠ WARNING

- **Do not use a tubeless tire on a wheel designed only for tube tires to avoid tire failure and personal injury from sudden deflation.**
- **When using tube tires, be sure to install the correct tube.**
- **Always replace a new tube tire and a new tube as a set.**
- **To avoid pinching the tube, make sure the wheel rim band and tube are centered in the wheel groove.**

http://manuals.magnamaniac.com

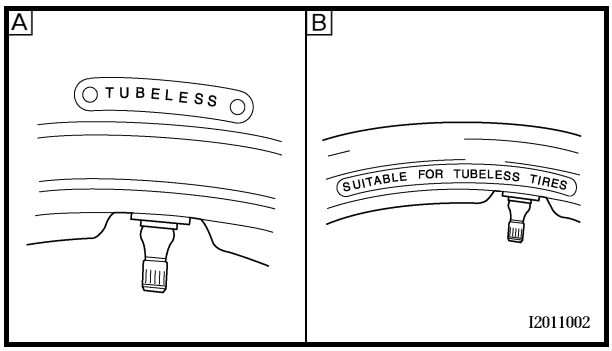

- **Patching a punctured tube is not recommended. If it is absolutely necessary to do so, use great care and replace the tube as soon as possible with a good quality replacement.**

A Tire
B Wheel

Tube wheel	**Tube tire only**
Tubeless wheel	**Tube or tubeless tire**

- **After extensive tests, the tires listed below have been approved by Yamaha Motor Co., Ltd. for this model. The front and rear tires should always be by the same manufacturer and of the same design. No guarantee concerning handling characteristics can be given if a tire combination other than one approved by Yamaha is used on this motorcycle.**

Front tire (XT660R)

Manufacturer	Model	Size
METZELER	TOURANCE FRONT	90/90-21M/C 54S
MICHELIN	SIRAC	90/90-21M/C 54T

Rear tire (XT660R)

Manufacturer	Model	Size
METZELER	TOURANCE	130/80-17M/C 65S
MICHELIN	SIRAC A	130/80-17M/C 65T

Front tire (XT660X)

Manufacturer	Model	Size
PIRELLI	DRAGON	120/70R 17M/C 58H

Rear tire (XT660X)

Manufacturer	Model	Size
PIRELLI	DRAGON	160/60R 17M/C 69H

http://manuals.magnamaniac.com

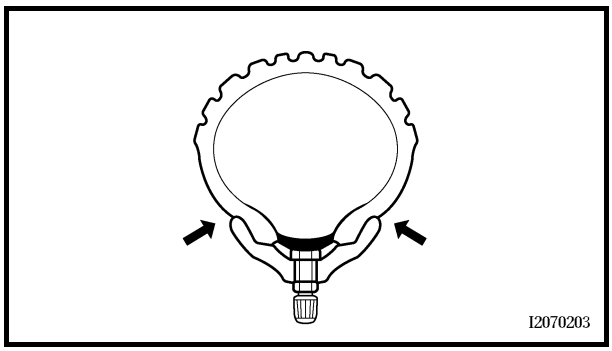

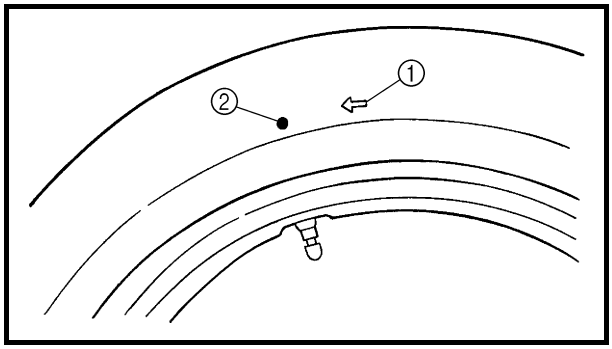

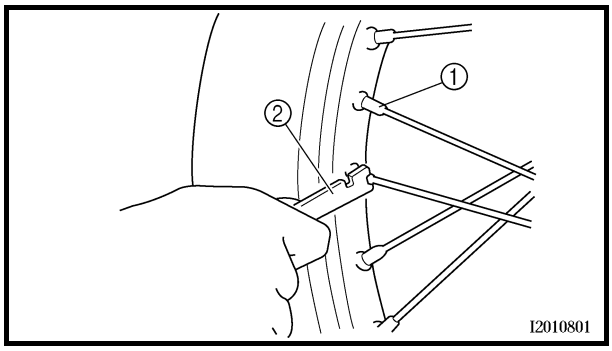

⚠ WARNING

New tires have a relatively low grip on the road surface until they have been slightly worn. Therefore, approximately 100 km should be traveled at normal speed before any high-speed riding is done.

NOTE:

For tires with a direction of rotation mark ①:

- Install the tire with the mark pointing in the direction of wheel rotation.
- Align the mark ② with the valve installation point.

EAS00169

CHECKING AND TIGHTENING THE SPOKES

The following procedure applies to all of the spokes.

1. Check:
   - spoke ①
     Bends/damage → Replace.
     Loose → Tighten.
     Tap the spokes with a screwdriver.

NOTE:

A tight spoke will emit a clear, ringing tone; a loose spoke will sound flat.

2. Tighten:
   - spoke
     (with a spoke wrench ②)

3 Nm (0.3 m · kg, 2.2 ft · lb)

NOTE:

Be sure to tighten the spokes before and after break in.

http://manuals.magnamaniac.com

EAS00170
CHECKING AND LUBRICATING THE CABLES

The following procedure applies to all of the inner and outer cables.

⚠ WARNING

Damaged outer cable may cause the cable to corrode and interfere with its movement. Replace damaged outer cable and inner cables as soon as possible.

1. Check:
   - outer cable
     Damage → Replace.
2. Check:
   - cable operation
     Rough movement → Lubricate.

Recommended lubricant
Engine oil or a suitable cable lubricant

NOTE:

Hold the cable end upright and pour a few drops of lubricant into the cable sheath or use a suitable lubricating device.

EAS00171
LUBRICATING THE LEVERS AND BRAKE PEDAL

Lubricate the pivoting point and metal-to-metal moving parts of the levers and brake pedal.

Recommended lubricant
Lithium-soap-based grease

EAS00172
LUBRICATING THE SIDESTAND

Lubricate the pivoting point and metal-to-metal moving parts of the sidestand.

Recommended lubricant
Lithium-soap-based grease

http://manuals.magnamaniac.com

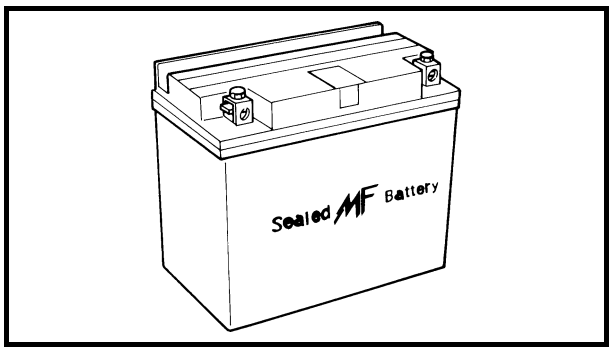

EAS00178

ELECTRICAL SYSTEM

CHECKING AND CHARGING THE BATTERY

⚠ WARNING

Batteries generate explosive hydrogen gas and contain electrolyte which is made of poisonous and highly caustic sulfuric acid. Therefore, always follow these preventive measures:

- **Wear protective eye gear when handling or working near batteries.**
- **Charge batteries in a well-ventilated area.**
- **Keep batteries away from fire, sparks or open flames (e.g., welding equipment, lighted cigarettes).**
- **DO NOT SMOKE when charging or handling batteries.**
- **KEEP BATTERIES AND ELECTROLYTE OUT OF REACH OF CHILDREN.**
- **Avoid bodily contact with electrolyte as it can cause severe burns or permanent eye injury.**

FIRST AID IN CASE OF BODILY CONTACT:
EXTERNAL

- **Skin — Wash with water.**
- **Eyes — Flush with water for 15 minutes and get immediate medical attention.**

INTERNAL

- **Drink large quantities of water or milk followed with milk of magnesia, beaten egg or vegetable oil. Get immediate medical attention.**

CAUTION:

- **This is a sealed battery. Never remove the sealing caps because the balance between cells will not be maintained and battery performance will deteriorate.**
- **Charging time, charging amperage and charging voltage for an MF battery are different from those of conventional batteries. The MF battery should be charged as explained in the charging method illustrations. If the battery is overcharged, the electrolyte level will drop considerably. Therefore, take special care when charging the battery.**

http://manuals.magnamac.com

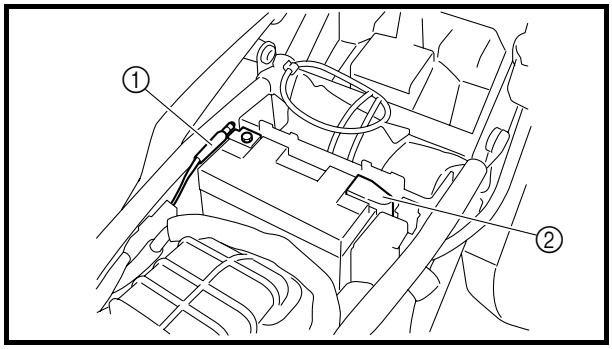

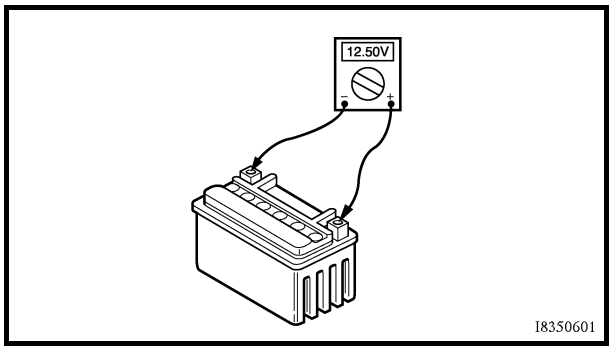

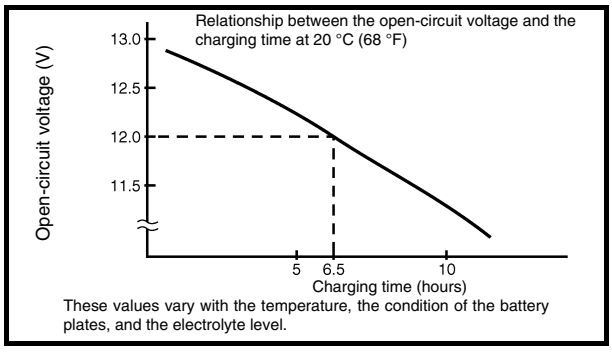

NOTE:

Since MF batteries are sealed, it is not possible to check the charge state of the battery by measuring the specific gravity of the electrolyte. Therefore, the charge of the battery has to be checked by measuring the voltage at the battery terminals.

1. Remove:
   - seat
     Refer to “COWLING AND COVER”.
   - battery cover
     Refer to “AIR FILTER CASE”.
2. Disconnect:
   - battery leads
     (from the battery terminals)

CAUTION:

First, disconnect the negative battery lead ①, then the positive battery lead ②.

3. Remove:
   - battery
4. Check:
   - battery charge

▼▼▼▼▼▼▼▼▼▼▼▼▼▼▼▼▼▼▼▼▼▼▼▼▼▼▼▼▼▼▼▼▼▼

a. Connect a pocket tester to the battery terminals.

Positive tester probe → positive battery terminal
Negative tester probe → negative battery terminal

NOTE:

- The charge state of an MF battery can be checked by measuring its open-circuit voltage (i.e., the voltage when the positive battery terminal is disconnected).
- No charging is necessary when the open-circuit voltage equals or exceeds 12.8 V.

b. Check the charge of the battery, as shown in the charts and the following example.

Example

c. Open-circuit voltage = 12.0 V
d. Charging time = 6.5 hours
e. Charge of the battery = 20 ~ 30%

▲▲▲▲▲▲▲▲▲▲▲▲▲▲▲▲▲▲▲▲▲▲▲▲▲▲▲▲▲▲▲▲▲▲

http://manuals.magnamaniac.com

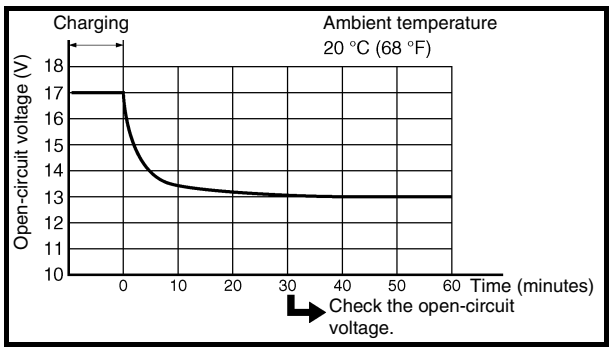

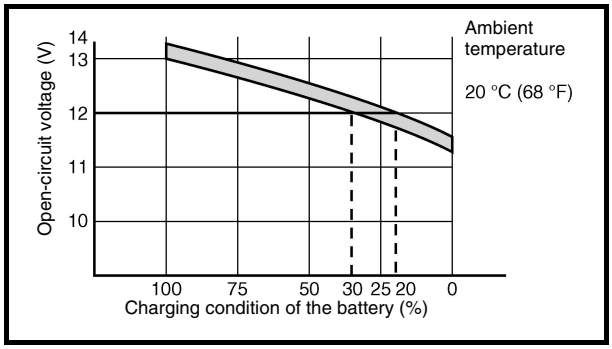

5. Charge:
   - battery
     (refer to the appropriate charging method illustration)

⚠ WARNING

Do not quick charge a battery.

CAUTION:

- **Never remove the MF battery sealing caps.**
- **Do not use a high-rate battery charger since it forces a high-amperage current into the battery quickly and can cause battery overheating and battery plate damage.**
- **If it is impossible to regulate the charging current on the battery charger, be careful not to overcharge the battery.**
- **When charging a battery, be sure to remove it from the motorcycle. (If charging has to be done with the battery mounted on the motorcycle, disconnect the negative battery lead from the battery terminal.)**
- **To reduce the chance of sparks, do not plug in the battery charger until the battery charger leads are connected to the battery.**
- **Before removing the battery charger lead clips from the battery terminals, be sure to turn off the battery charger.**
- **Make sure the battery charger lead clips are in full contact with the battery terminal and that they are not shorted. A corroded battery charger lead clip may generate heat in the contact area and a weak clip spring may cause sparks.**
- **If the battery becomes hot to the touch at any time during the charging process, disconnect the battery charger and let the battery cool before reconnecting it. Hot batteries can explode!**
- **As shown in the illustration, the open-circuit voltage of an MF battery stabilizes about 30 minutes after charging has been completed. Therefore, wait 30 minutes after charging is completed before measuring the open-circuit voltage.**

http://manuals.magnamarine.com

Charging method using a variable-current (voltage) charger

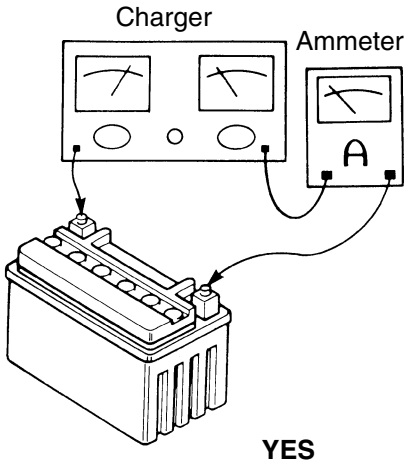

Measure the open-circuit voltage prior to charging.

NOTE:
Leave the battery unused for more than 30 minutes before measuring its open-circuit voltage.

Connect a charger and ammeter to the battery and start charging.

NOTE:
Set the charging voltage to 16 ~ 17 V. (If the charging voltage is lower, charging will be insufficient, if it is higher, the battery will be over-charged.)

Is the amperage higher than the standard charging amperage written on the battery?

YES

NO

Adjust the charging voltage to 20 ~ 25 V.

Monitor the amperage for 3 ~ 5 minutes. Is the standard charging amperage exceeded?

YES

Adjust the voltage to obtain the standard charging amperage.

NO

If the amperage does not exceed the standard charging amperage after 5 minutes, replace the battery.

Set the timer to the charging time determined by the open-circuit voltage.
Refer to “CHECKING AND CHARGING THE BATTERY”.

If the required charging time exceeds 5 hours, it is advisable to check the charging amperage after 5 hours. If there is any change in the amperage, readjust the voltage to obtain the standard charging amperage.

Leave the battery unused for more than 30 minutes before measuring its open-circuit voltage.
12.8 V → Charging is complete.
12.0 ~ 12.7 V → Recharging is required.
Under 12.0 V → Replace the battery.

http://manuals.magnamaniac.com

Charging method using a constant voltage charger

Measure the open-circuit voltage prior to charging.

NOTE:
Leave the battery unused for more than 30 minutes before measuring its open-circuit voltage.

Connect a charger and ammeter to the battery and start charging.

Is the amperage higher than the standard charging amperage written on the battery?

YES

Charge the battery until the charging voltage reaches 15 V.

NOTE:
Set the charging time to a maximum of 20 hours.

Leave the battery unused for more than 30 minutes before measuring its open-circuit voltage.
12.8 V → Charging is complete.
12.0 ~ 12.7 V → Recharging is required.
Under 12.0 V → Replace the battery.

CAUTION:
Constant amperage chargers are not suitable for charging MF batteries.

NO

This type of battery charger cannot charge an MF battery. A variable-voltage charger is recommended.

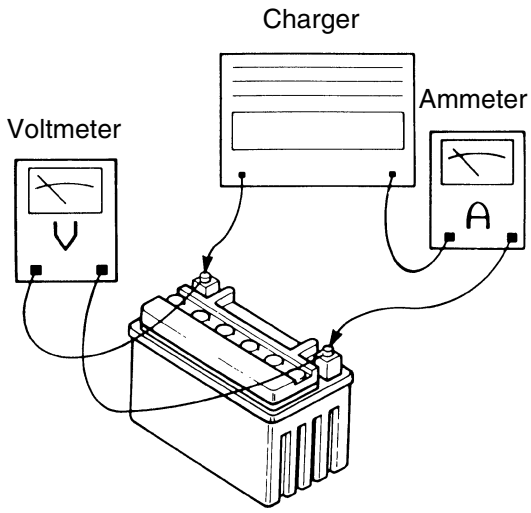

http://manuals.magnamaniac.com

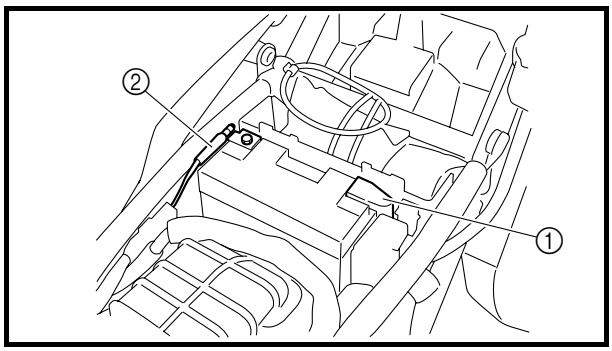

6. Install:
   • battery
7. Connect:
   • battery leads
     (to the battery terminals)

CAUTION:

First, connect the positive battery lead ①, then the negative battery lead ②.

8. Check:
   • battery terminals
     Dirt → Clean with a wire brush.
     Loose connection → Connect properly.
9. Lubricate:
   • battery terminals

	Recommended lubricant **Dielectric grease**

10. Install:
    • battery cover
      Refer to “AIR FILTER CASE”.
    • seat
      Refer to “COWLING AND COVER”.

EAS00181
CHECKING THE FUSES

The following procedure applies to all of the fuses.

CAUTION:

To avoid a short circuit, always set the main switch to “OFF” when checking or replacing a fuse.

1. Remove:
   • seat
   • left side panel
     Refer to “COWLING AND COVER”.

http://manuals.magnamaniac.com

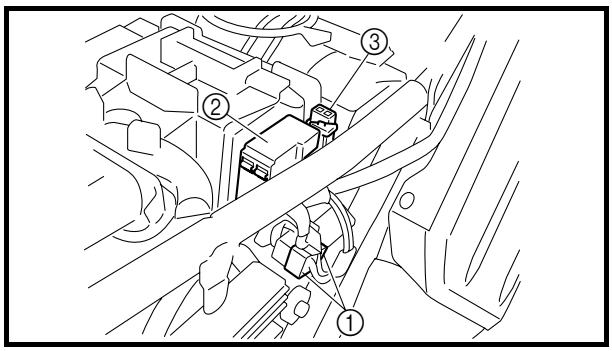

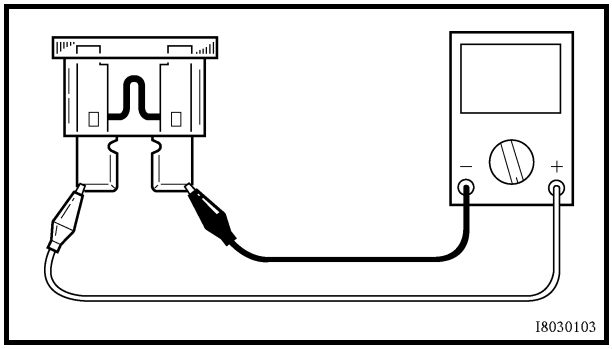

2. Check:
   - fuse ①
   - fuse box 1 ②
   - fuse box 2 ③

▼▼▼▼▼▼▼▼▼▼▼▼▼▼▼▼▼▼▼▼▼▼▼▼▼▼▼▼▼▼▼▼▼▼

a. Connect the pocket tester to the fuse and check the continuity.

NOTE:

Set the pocket tester selector to "Ω × 1".

	Pocket tester **90890-03112**

b. If the pocket tester indicates "∞", replace the fuse.

▲▲▲▲▲▲▲▲▲▲▲▲▲▲▲▲▲▲▲▲▲▲▲▲▲▲▲▲▲▲▲▲▲▲

3. Replace:
   - blown fuse

▼▼▼▼▼▼▼▼▼▼▼▼▼▼▼▼▼▼▼▼▼▼▼▼▼▼▼▼▼▼▼▼▼▼

a. Set the main switch to "OFF".
b. Install a new fuse of the correct amperage rating.
c. Set on the switches to verify if the electrical circuit is operational.
d. If the fuse immediately blows again, check the electrical circuit.

Fuses	Amperage rating	Q'ty
Main	30 A	1
Headlight	20 A	1
Signaling system	10 A	1
Ignition	10 A	1
Fuel injection system	10 A	1
Parking lighting system	10 A	1
Radiator fan motor	7.5 A	1
Backup (immobilizer unit, meter assembly)	10 A	1
Reserve	30 A	1
Reserve	20 A	1
Reserve	10 A	1
Reserve	7.5 A	1

http://manuals.magnamaniac.com

⚠ WARNING

Never use a fuse with an amperage rating other than that specified. Improvising or using a fuse with the wrong amperage rating may cause extensive damage to the electrical system, cause the lighting and ignition systems to malfunction and could possibly cause a fire.

▲▲▲▲▲▲▲▲▲▲▲▲▲▲▲▲▲▲▲▲▲▲▲▲▲▲▲▲▲▲

4. Install:
   - left side panel
   - seat

   Refer to “COWLING AND COVER”.

EAS00182
REPLACING THE HEADLIGHT BULB

1. Remove:
   - front fender
   - front fork protector
   - front cowling

   Refer to “COWLING AND COVER”.

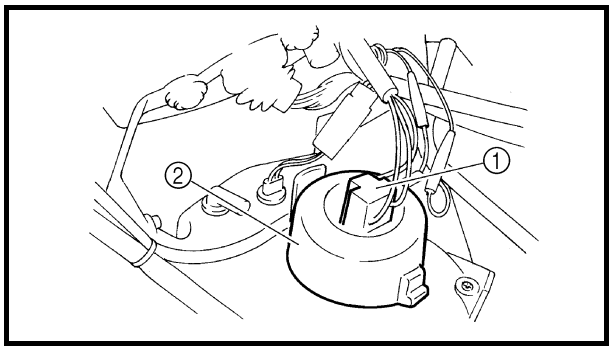

2. Disconnect:
   - headlight coupler ①
3. Remove:
   - headlight bulb holder cover ②

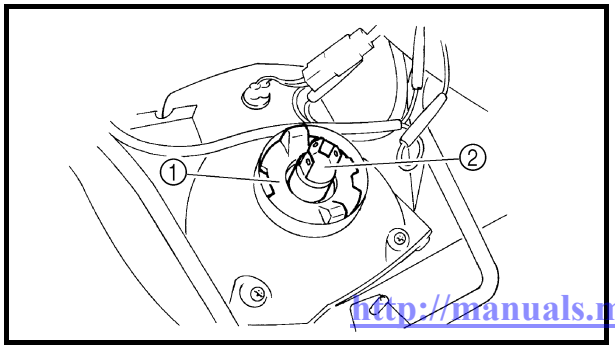

4. Remove:
   - headlight bulb holder ①
   - headlight bulb ②

⚠ WARNING

Since the headlight bulb gets extremely hot, keep flammable products and your hands away from the bulb until it has cooled down.

http://manuals.magnamaniac.com

5. Install:
   - headlight bulb New
   - headlight bulb holder
   - headlight bulb holder cover

CAUTION:

Avoid touching the glass part of the headlight bulb to keep it free from oil, otherwise the transparency of the glass, the life of the bulb and the luminous flux will be adversely affected. If the headlight bulb gets soiled, thoroughly clean it with a cloth moistened with alcohol or lacquer thinner.

6. Connect:
   - headlight coupler
7. Install:
   - front cowling
   - front fork protector
   - front fender

   Refer to “COWLING AND COVER”.

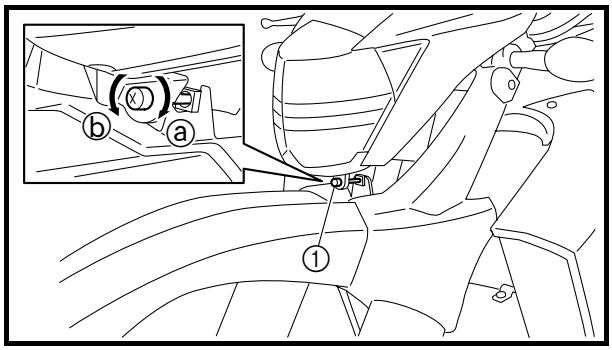

EAS00186

ADJUSTING THE HEADLIGHT BEAM

1. Adjust:
   - headlight beam (vertically)

▼▼▼▼▼▼▼▼▼▼▼▼▼▼▼▼▼▼▼▼▼▼▼▼▼▼▼▼▼▼▼▼▼▼

a. Turn the adjusting screw ① in direction ⓐ or ⓑ.

Direction ⓐ	**Headlight beam is lowered.**
Direction ⓑ	**Headlight beam is raised.**

▲▲▲▲▲▲▲▲▲▲▲▲▲▲▲▲▲▲▲▲▲▲▲▲▲▲▲▲▲▲▲▲▲▲

http://manuals.magnamaniac.com

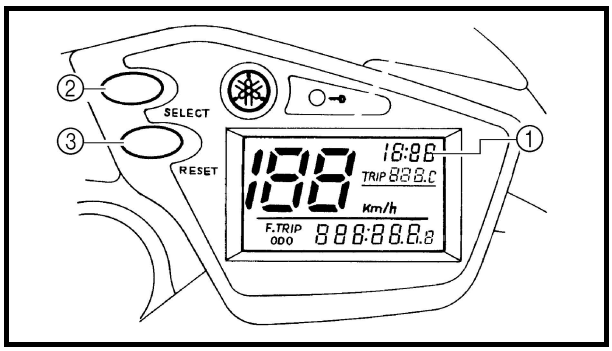

EAS00187
SETTING THE DIGITAL CLOCK

1. Set:
   - digital clock ①

▼▼▼▼▼▼▼▼▼▼▼▼▼▼▼▼▼▼▼▼▼▼▼▼▼▼▼▼▼▼▼▼▼▼

a. Set the main switch to “ON”.
b. Push the “SELECT” button ② and “RESET” button ③ together for at least two seconds.
c. When the hour digits start flashing, push the “RESET” button to set the hours.
d. Push the “SELECT” button and the minute digits will start flashing.
e. Push the “RESET” button to set the minutes.
f. Push the “SELECT” button to start the clock.

NOTE:

After reconnecting the battery, the clock indication is 1:00 and must be set to the correct time.

▲▲▲▲▲▲▲▲▲▲▲▲▲▲▲▲▲▲▲▲▲▲▲▲▲▲▲▲▲▲▲▲▲▲

http://manuals.magnamaniac.com

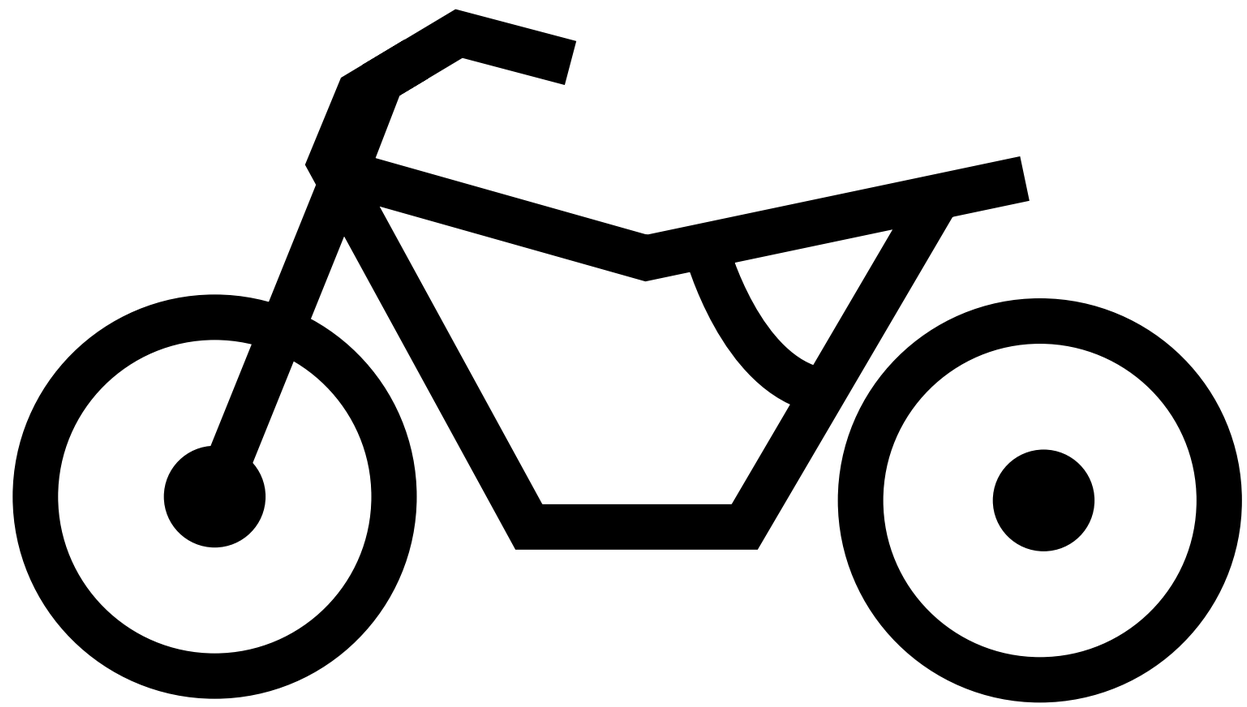

CHAS 4

http://manuals.magnamaniac.com

CHAPTER 4
CHASSIS

FRONT WHEEL AND BRAKE DISC 4-1
FRONT WHEEL 4-2
REMOVING THE FRONT WHEEL 4-3
CHECKING THE FRONT WHEEL 4-3
CHECKING THE FRONT BRAKE DISC 4-6
INSTALLING THE FRONT WHEEL 4-7
ADJUSTING THE FRONT WHEEL STATIC BALANCE 4-8

REAR WHEEL, BRAKE DISC, AND REAR WHEEL SPROCKET 4-10
REAR WHEEL 4-10
BRAKE DISC AND REAR WHEEL SPROCKET 4-12
REMOVING THE REAR WHEEL 4-14
CHECKING THE REAR WHEEL 4-14
CHECKING THE REAR BRAKE DISC 4-15
CHECKING THE REAR WHEEL DRIVE HUB 4-16
CHECKING AND REPLACING THE REAR WHEEL SPROCKET 4-17
INSTALLING THE REAR WHEEL 4-17
ADJUSTING THE REAR WHEEL STATIC BALANCE 4-18

FRONT AND REAR BRAKES 4-19
FRONT BRAKE PADS (XT660R) 4-19
FRONT BRAKE PADS (XT660X) 4-20
REAR BRAKE PADS 4-21
REPLACING THE FRONT BRAKE PADS 4-22
REPLACING THE REAR BRAKE PADS 4-24
FRONT BRAKE MASTER CYLINDER 4-26
REAR BRAKE MASTER CYLINDER 4-29
DISASSEMBLING THE FRONT BRAKE MASTER CYLINDER 4-32
DISASSEMBLING THE REAR BRAKE MASTER CYLINDER 4-32
CHECKING THE FRONT AND REAR BRAKE MASTER CYLINDERS 4-33
ASSEMBLING AND INSTALLING THE FRONT BRAKE MASTER CYLINDER 4-34
ASSEMBLING THE REAR BRAKE MASTER CYLINDER 4-36
INSTALLING THE REAR BRAKE MASTER CYLINDER 4-36
FRONT BRAKE CALIPER (XT660R) 4-39
FRONT BRAKE CALIPER (XT660X) 4-41
REAR BRAKE CALIPER 4-43
REMOVING THE FRONT BRAKE CALIPER 4-45
REMOVING THE REAR BRAKE CALIPER 4-45
CHECKING THE FRONT AND REAR BRAKE CALIPERS 4-46
INSTALLING THE FRONT BRAKE CALIPER 4-47
INSTALLING THE REAR BRAKE CALIPER 4-49

http://manuals.magnamaniac.com

FRONT FORK 4-51
REMOVING THE FRONT FORK LEGS 4-55
DISASSEMBLING THE FRONT FORK LEGS 4-55
CHECKING THE FRONT FORK LEGS 4-57
ASSEMBLING THE FRONT FORK LEGS 4-58
INSTALLING THE FRONT FORK LEGS 4-62

HANDLEBAR 4-63
REMOVING THE HANDLEBAR 4-65
CHECKING THE HANDLEBAR 4-65
INSTALLING THE HANDLEBAR 4-65

STEERING HEAD 4-69
LOWER BRACKET 4-69
REMOVING THE LOWER BRACKET 4-71
CHECKING THE STEERING HEAD 4-71
INSTALLING THE STEERING HEAD 4-72

REAR SHOCK ABSORBER ASSEMBLY 4-74
HANDLING THE REAR SHOCK ABSORBER 4-76
DISPOSING OF A REAR SHOCK ABSORBER 4-76
REMOVING THE REAR SHOCK ABSORBER ASSEMBLY 4-77
CHECKING THE REAR SHOCK ABSORBER ASSEMBLY 4-78
CHECKING THE CONNECTING ARMS AND RELAY ARM 4-78
INSTALLING THE RELAY ARM 4-78
INSTALLING THE REAR SHOCK ABSORBER ASSEMBLY 4-79

SWINGARM AND DRIVE CHAIN 4-80
REMOVING THE SWINGARM 4-82
REMOVING THE DRIVE SPROCKET 4-83
REMOVING THE DRIVE CHAIN 4-83
CHECKING THE SWINGARM 4-83
CHECKING THE DRIVE CHAIN 4-84
INSTALLING THE SWINGARM 4-86

http://manuals.magnamaniac.com

EAS00512

CHASSIS

FRONT WHEEL AND BRAKE DISC

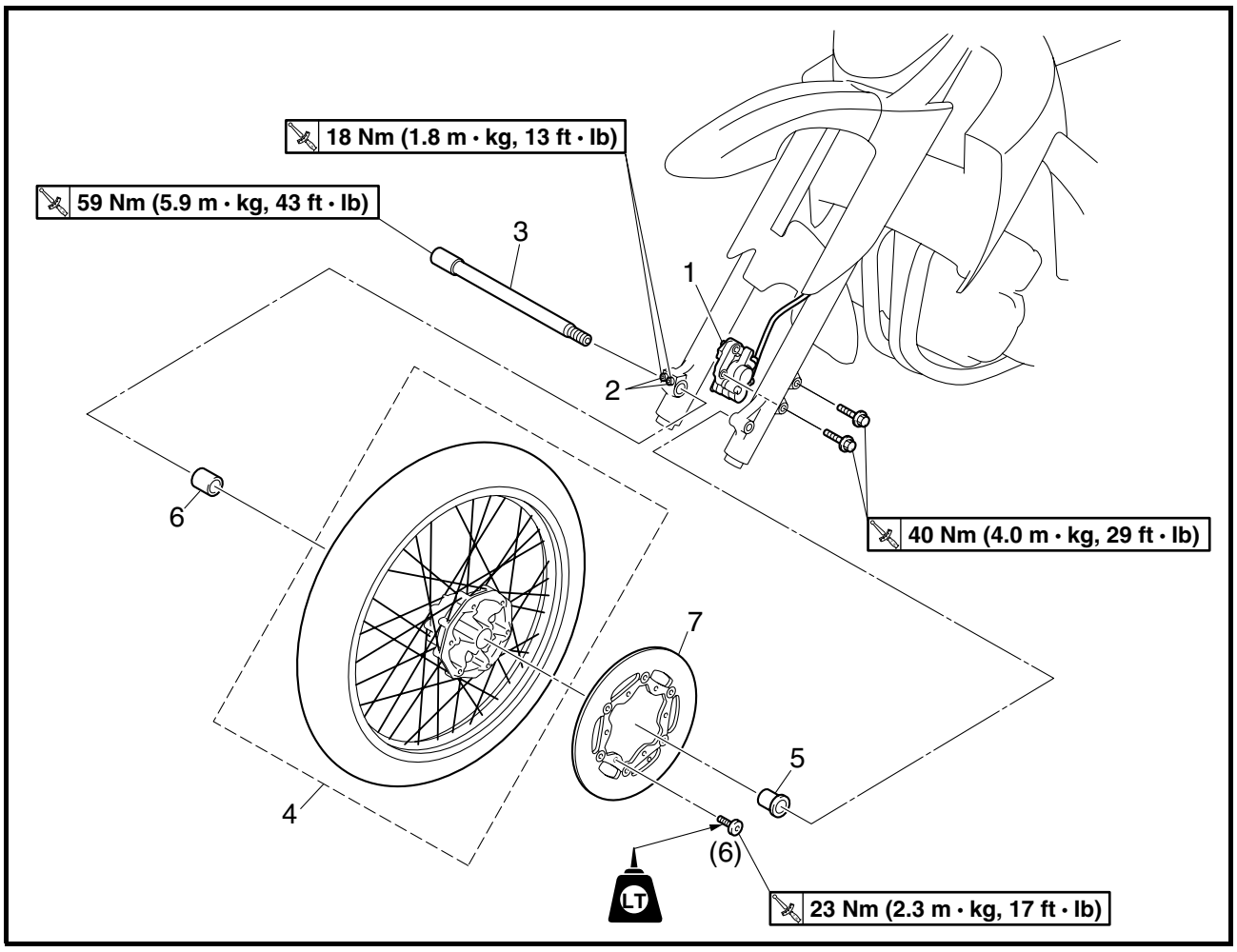

Order	Job/Part	Q'ty	Remarks
	Removing the front wheel and brake disc		Remove the parts in the order listed. **NOTE:** Place the motorcycle on a suitable stand so that the front wheel is elevated.
1	Brake caliper	1	Refer to "REMOVING THE FRONT WHEEL" and "INSTALLING THE FRONT WHEEL".
2	Wheel axle pinch bolt	2	Loosen.
3	Front wheel axle	1	
4	Front wheel	1	
5	Spacer (left)	1	
6	Spacer (right)	1	
7	Front brake disc	1	
			For installation, reverse the removal procedure.

http://manuals.magnamaniac.com

EAS00518

FRONT WHEEL

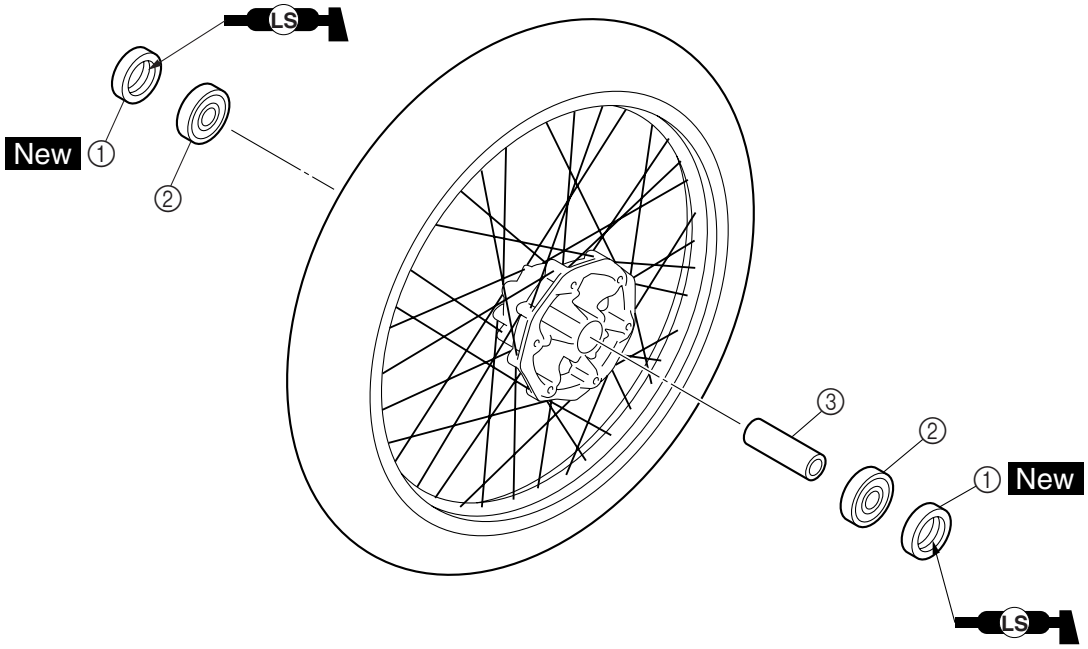

Order	Job/Part	Q'ty	Remarks
	Disassembling the front wheel		Remove the parts in the order listed.
①	Oil seal	2	
②	Bearing	2	
③	Spacer	1	
			For assembly, reverse the disassembly procedure.

http://manuals.magnamaniac.com

EAS00519
REMOVING THE FRONT WHEEL

1. Stand the motorcycle on a level surface.

⚠ WARNING

Securely support the motorcycle so that there is no danger of it falling over.

NOTE:

Place the motorcycle on a suitable stand so that the front wheel is elevated.

2. Remove:
   - brake caliper

NOTE:

Do not apply the brake lever when removing the brake caliper.

3. Elevate:
   - front wheel

NOTE:

Place the motorcycle on a suitable stand so that the front wheel is elevated.

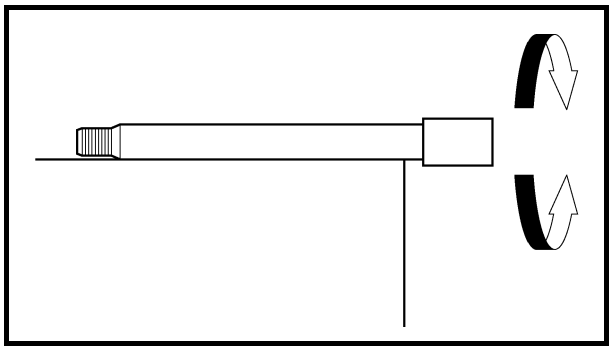

EAS00526
CHECKING THE FRONT WHEEL

1. Check:
   - wheel axle
     Roll the wheel axle on a flat surface.
     Bends → Replace.

⚠ WARNING

Do not attempt to straighten a bent wheel axle.

2. Check:
   - tire
   - front wheel
     Damage/wear → Replace.
     Refer to “CHECKING THE TIRES” in chapter 3.

http://manuals.magnamaniac.com

3. Check:
   • spokes
     Bends/damage → Replace.
     Loose → Tighten.
     Tap the spokes with a screwdriver.

NOTE:
A tight spoke will emit a clear, ringing tone, a loose spoke will sound flat.

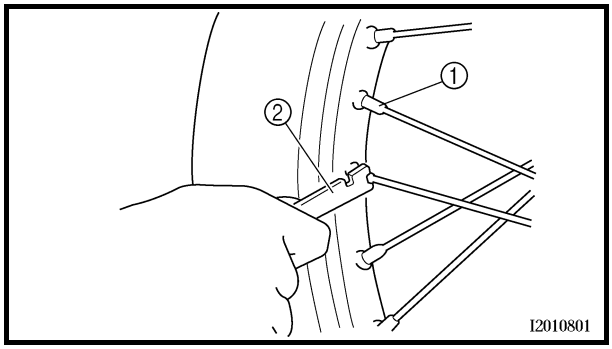

4. Tighten:
   • spokes ①
     (with a spoke wrench ②)

3 Nm (0.3 m · kg, 2.2 ft · lb)

NOTE:
After tightening the spokes, measure the front wheel runout.

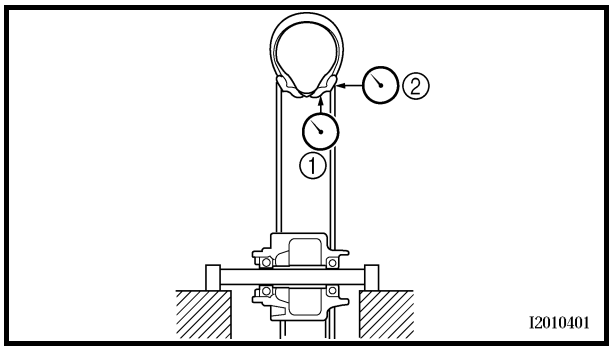

5. Measure:
   • radial wheel runout ①
   • lateral wheel runout ②
     Over the specified limits → Replace.

radial wheel runout limit
2.0 mm (0.08 in)
lateral wheel runout limit
2.0 mm (0.08 in)

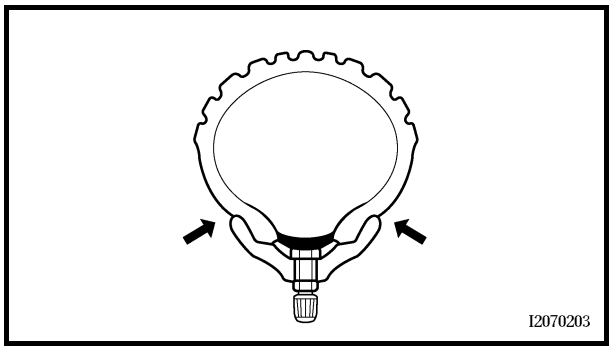

6. Check:
   • collars
     Damage/wear → Replace.

⚠ WARNING

After mounting a new tire, ride conservatively for a while to become accustomed to the "feel" of the new tire and to allow the tire to seat itself properly in the rim. Failure to do so could lead to an accident with possible injury to the rider or damage to the motorcycle.

http://manuals.magnamaniac.com

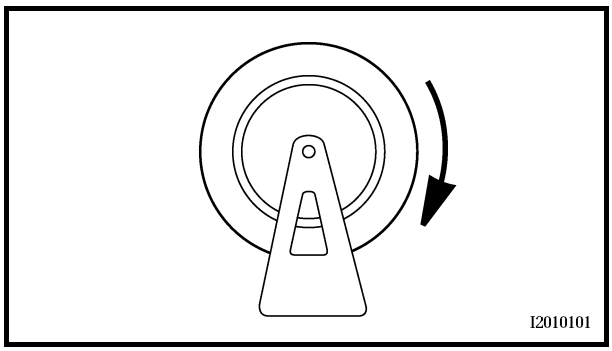

7. Check:
   - wheel bearings
     Front wheel turns roughly or is loose → Replace the wheel bearings.
   - oil seals
     Damage/wear → Replace.

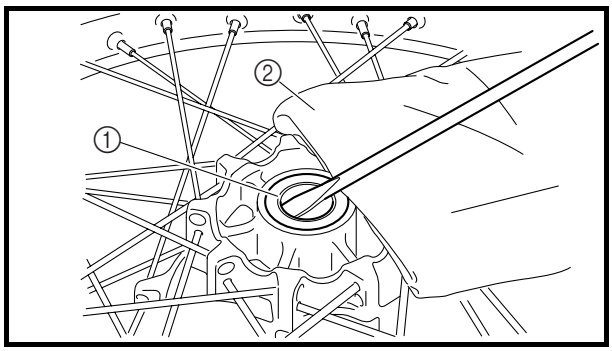

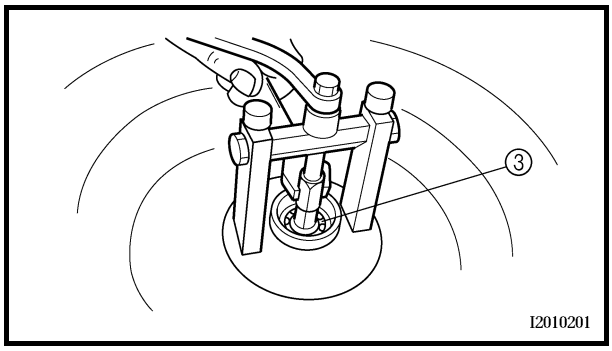

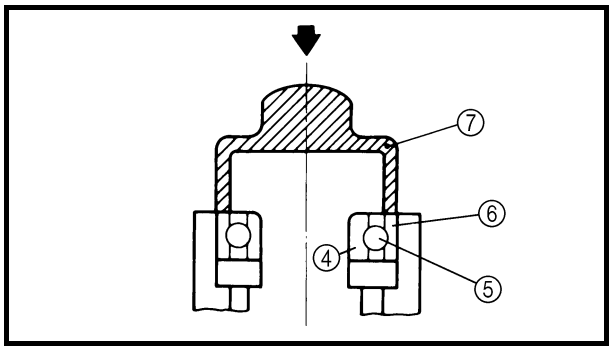

8. Replace:
   - oil seals New
   - wheel bearings New

▼▼▼▼▼▼▼▼▼▼▼▼▼▼▼▼▼▼▼▼▼▼▼▼▼▼▼▼▼▼▼▼▼▼

a. Clean the outside of the front wheel hub.
b. Remove the oil seals ① with a flat-head screwdriver.

NOTE:

To prevent damaging the wheel, place a rag ② between the screwdriver and the wheel surface.

c. Remove the wheel bearings ③ with a general bearing puller.
d. Install the new wheel bearings and oil seals in the reverse order of disassembly.

CAUTION:

Do not contact the wheel bearing inner race ④ or balls ⑤. Contact should be made only with the outer race ⑥.

NOTE:

Use a socket ⑦ that matches the diameter of the wheel bearing outer race and oil seal.

▲▲▲▲▲▲▲▲▲▲▲▲▲▲▲▲▲▲▲▲▲▲▲▲▲▲▲▲▲▲▲▲▲▲

http://manuals.magnamaniac.com

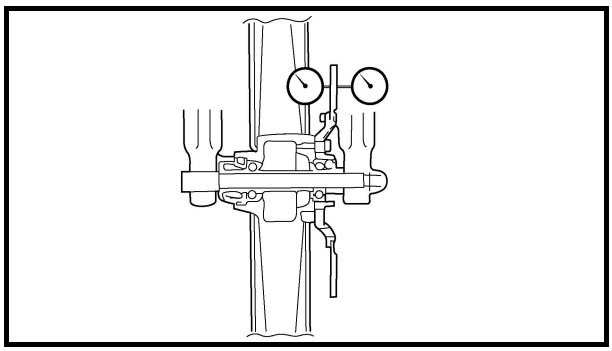

EAS00527
CHECKING THE FRONT BRAKE DISC

1. Check:
   - brake disc
     Damage/galling → Replace.
2. Measure:
   - brake disc deflection
     Out of specification → Correct the brake disc deflection or replace the brake disc.

Brake disc deflection limit (maximum)
0.15 mm (0.006 in)

▼▼▼▼▼▼▼▼▼▼▼▼▼▼▼▼▼▼▼▼▼▼▼▼▼▼▼▼▼▼▼▼▼▼

a. Place the motorcycle on a suitable stand so that the front wheel is elevated.
b. Before measuring the front brake disc deflection, turn the handlebar to the left or right to ensure that the front wheel is stationary.
c. Remove the brake caliper.
d. Hold the dial gauge at a right angle against the brake disc surface.
e. Measure the deflection 3.0 mm (0.12 in) below the edge of the brake disc.

▲▲▲▲▲▲▲▲▲▲▲▲▲▲▲▲▲▲▲▲▲▲▲▲▲▲▲▲▲▲▲▲▲▲

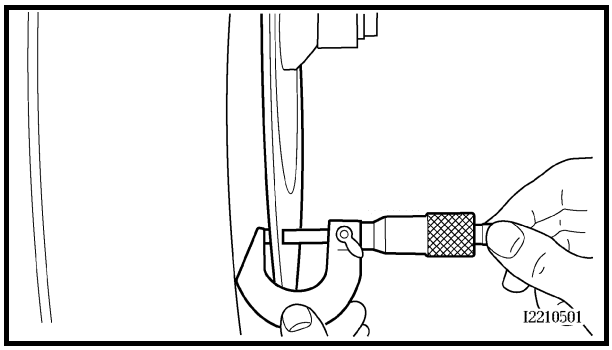

3. Measure:
   - brake disc thickness
     Measure the brake disc thickness at a few different locations.
     Out of specification → Replace.

Brake disc thickness limit (minimum)
4.0 mm (0.16 in)

http://manuals.magnamaniac.com

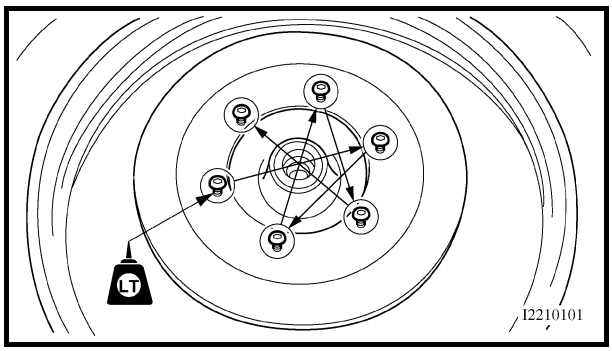

4. Adjust:
   • brake disc deflection

▼▼▼▼▼▼▼▼▼▼▼▼▼▼▼▼▼▼▼▼▼▼▼▼▼▼▼▼▼▼▼▼▼▼

a. Remove the brake disc.
b. Rotate the brake disc by one bolt hole.
c. Install the brake disc.

NOTE:

Tighten the brake disc bolts in stages and in a crisscross pattern.

Brake disc bolt
23 Nm (2.3 m · kg, 17 ft · lb)
LOCTITE®

d. Measure the brake disc deflection.
e. If out of specification, repeat the adjustment steps until the brake disc deflection is within specification.
f. If the brake disc deflection cannot be brought within specification, replace the brake disc.

▲▲▲▲▲▲▲▲▲▲▲▲▲▲▲▲▲▲▲▲▲▲▲▲▲▲▲▲▲▲▲▲▲▲

EAS00542
INSTALLING THE FRONT WHEEL

1. Lubricate:
   • oil seal lips

Recommended lubricant
Lithium-soap-based grease

http://manuals.magnamaniac.com

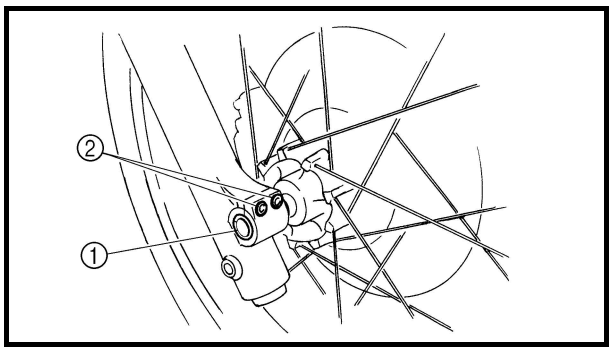

2. Tighten:
   - wheel axle ① **59 Nm (5.9 m · kg, 43 ft · lb)**
   - wheel axle pinch bolts ②

     18 Nm (1.8 m · kg, 13 ft · lb)

CAUTION:

Before tightening the wheel axle nut, push down hard on the handlebar several times and check if the front fork rebounds smoothly.

NOTE:

To tighten the wheel axle pinch bolt, tighten the outer and inner bolts to the specified torque, and then tighten the outer bolt to the specified torque again.

3. Install:
   - brake caliper bolts

     40 Nm (4.0 m · kg, 29 ft · lb)

⚠ WARNING

Make sure the brake hose is routed properly.

EAS00548

ADJUSTING THE FRONT WHEEL STATIC BALANCE

NOTE:

- After replacing the tire, wheel or both, the front wheel static balance should be adjusted.
- Adjust the front wheel static balance with the brake disc installed.

1. Remove:
   - balancing weight(s)

http://manuals.magnamaniac.com

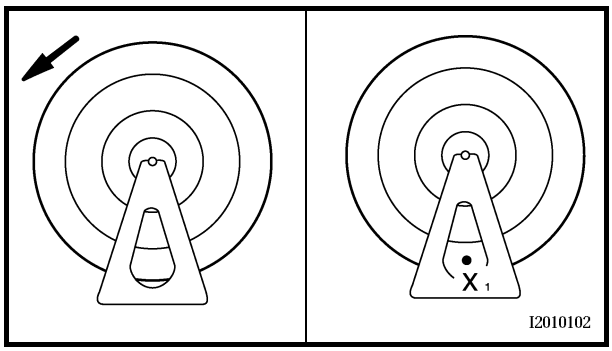

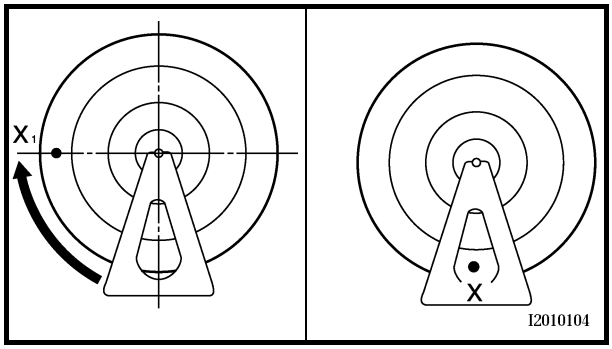

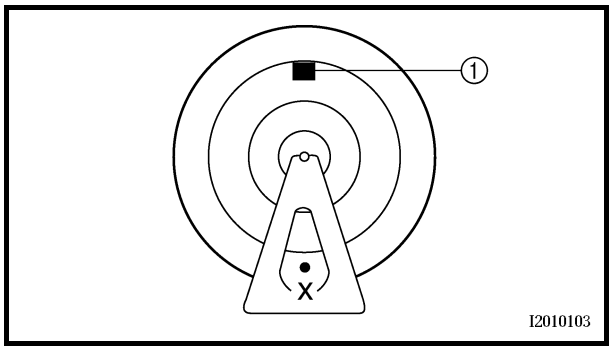

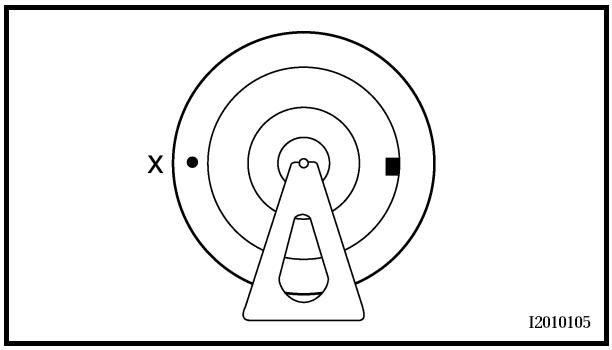

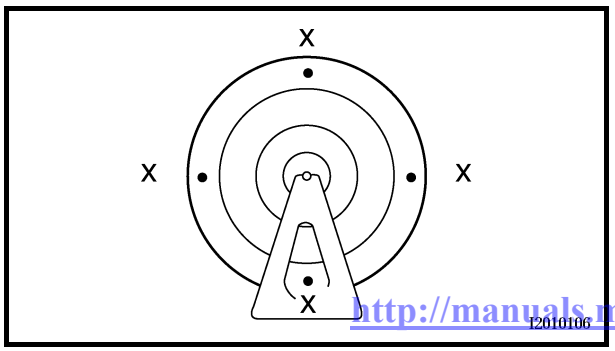

2. Find:
   • front wheel's heavy spot

NOTE:
Place the front wheel on a suitable balancing stand.

▼▼▼▼▼▼▼▼▼▼▼▼▼▼▼▼▼▼▼▼▼▼▼▼▼▼▼▼▼▼▼▼

a. Spin the front wheel.
b. When the front wheel stops, put an "X_1" mark at the bottom of the wheel.
c. Turn the front wheel 90° so that the "X_1" mark is positioned as shown.
d. Release the front wheel.
e. When the wheel stops, put an "X_2" mark at the bottom of the wheel.
f. Repeat steps (d) through (f) several times until all the marks come to rest at the same spot.
g. The spot where all the marks come to rest is the front wheel's heavy spot "X".

▲▲▲▲▲▲▲▲▲▲▲▲▲▲▲▲▲▲▲▲▲▲▲▲▲▲▲▲▲▲▲▲

3. Adjust:
   • front wheel static balance

▼▼▼▼▼▼▼▼▼▼▼▼▼▼▼▼▼▼▼▼▼▼▼▼▼▼▼▼▼▼▼▼

a. Install a balancing weight ① onto the rim exactly opposite the heavy spot "X".

NOTE:
Start with the lightest weight.

b. Turn the front wheel 90° so that the heavy spot is positioned as shown.
c. If the heavy spot does not stay in that position, install a heavier weight.
d. Repeat steps (b) and (c) until the front wheel is balanced.

▲▲▲▲▲▲▲▲▲▲▲▲▲▲▲▲▲▲▲▲▲▲▲▲▲▲▲▲▲▲▲▲

4. Check:
   • front wheel static balance

▼▼▼▼▼▼▼▼▼▼▼▼▼▼▼▼▼▼▼▼▼▼▼▼▼▼▼▼▼▼▼▼

a. Turn the front wheel and make sure it stays at each position shown.
b. If the front wheel does not remain stationary at all of the positions, rebalance it.

▲▲▲▲▲▲▲▲▲▲▲▲▲▲▲▲▲▲▲▲▲▲▲▲▲▲▲▲▲▲▲▲

http://manuals.magnamaniac.com

EAS00550

REAR WHEEL, BRAKE DISC, AND REAR WHEEL SPROCKET

REAR WHEEL

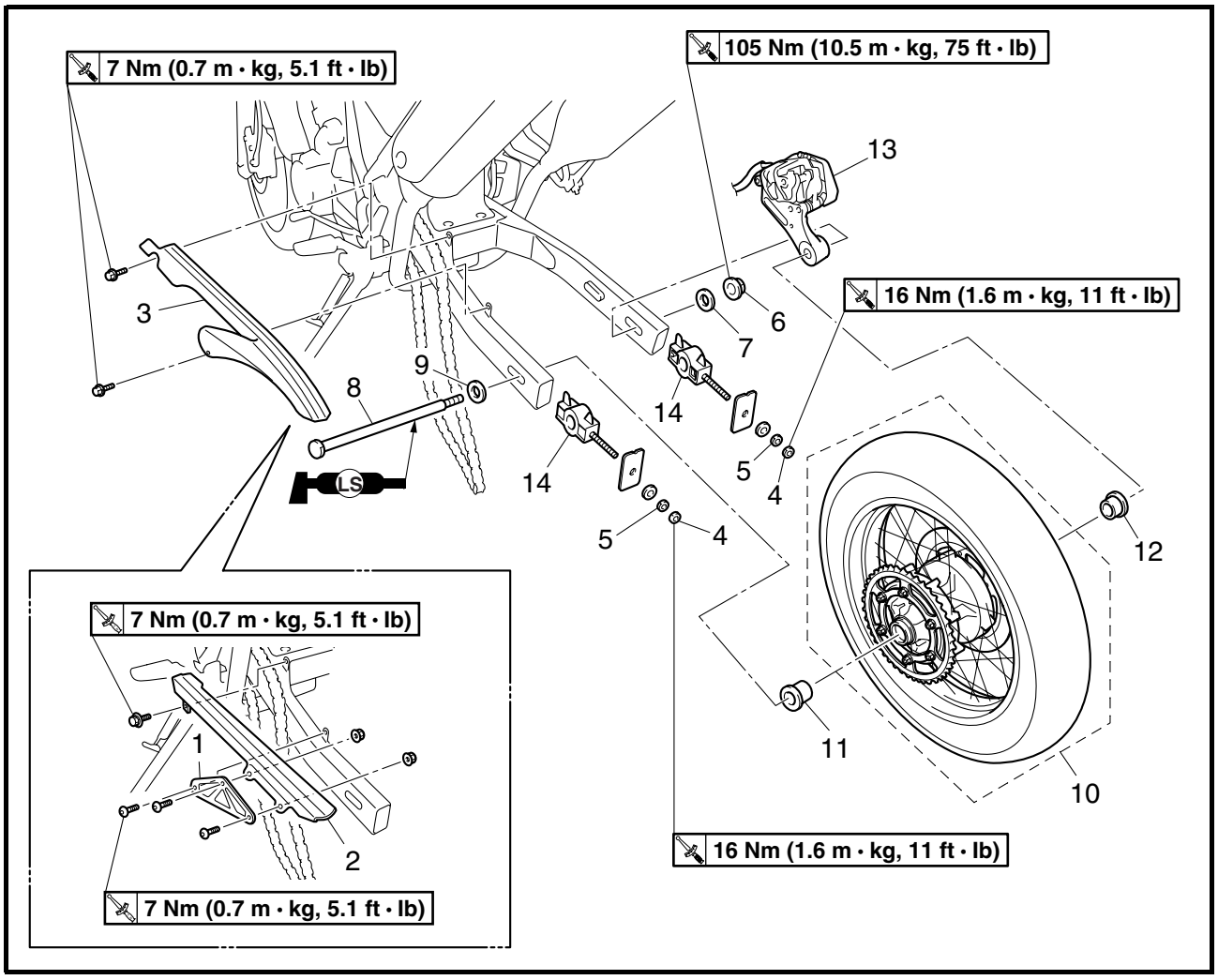

Order	Job/Part	Q'ty	Remarks
	Removing the rear wheel		Remove the parts in the order listed. **NOTE:** Place the motorcycle on a suitable stand so that the rear wheel is elevated.
1	Stabilizer	1	XT660X
2	Chain cover	1	XT660X
3	Chain cover	1	XT660R
4	Locknut	2	Loosen.
5	Adjusting nut	2	Loosen.
6	Wheel axle nut	1	Refer to "INSTALLING THE REAR WHEEL".
7	Washer (N)	1	
8	Rear wheel axle	1	
9	Washer (O)	1	

http://manuals.magnamaniac.com

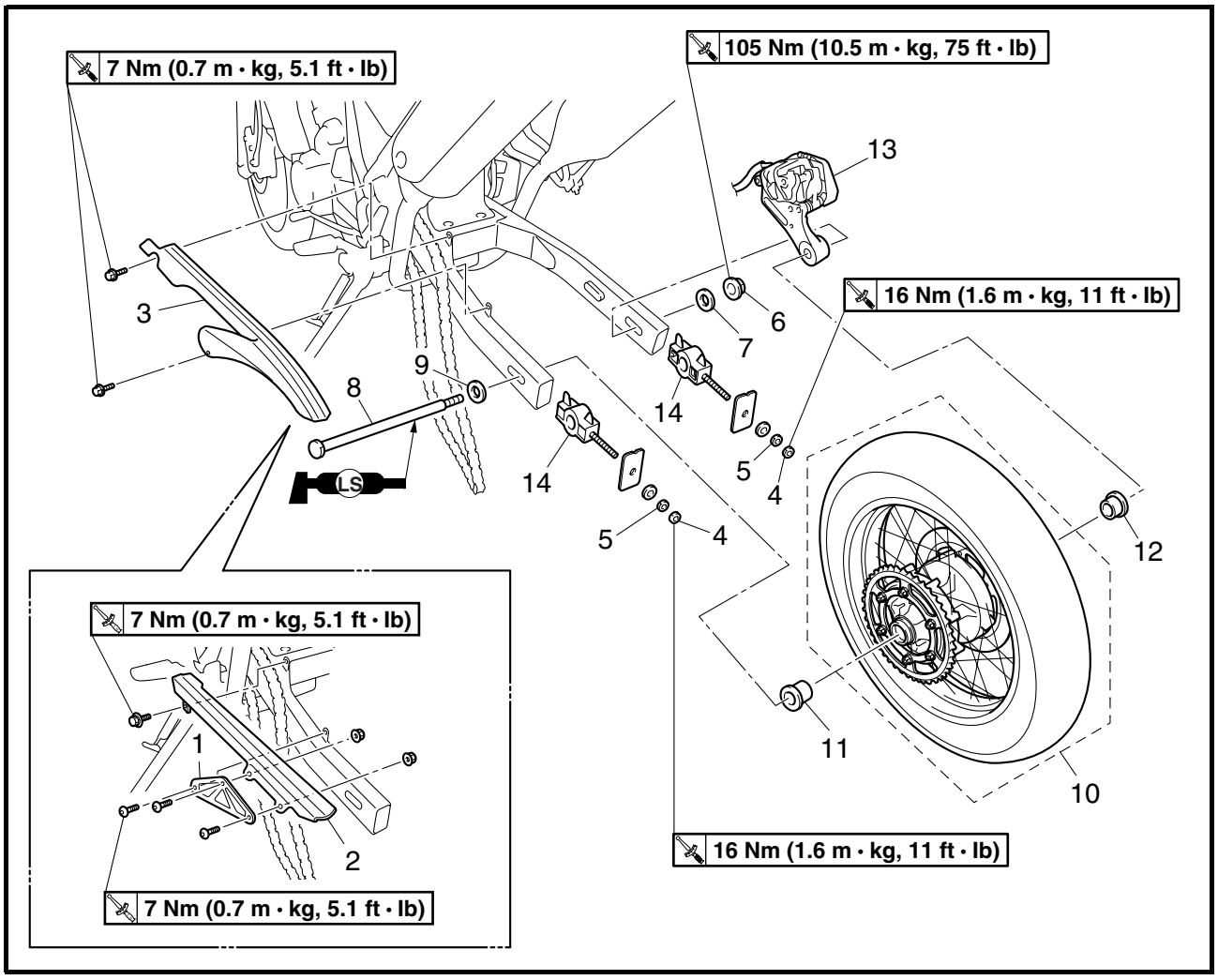

Order	Job/Part	Q'ty	Remarks
10	Rear wheel	1	Refer to "REMOVING THE REAR WHEEL" and "INSTALLING THE REAR WHEEL".
11	Spacer (left)	1	
12	Spacer (right)	1	
13	Brake caliper	1	Refer to "REMOVING THE REAR WHEEL" and "INSTALLING THE REAR WHEEL".
14	Chain puller	2	For installation, reverse the removal procedure.

http://manuals.magnamaniac.com

BRAKE DISC AND REAR WHEEL SPROCKET

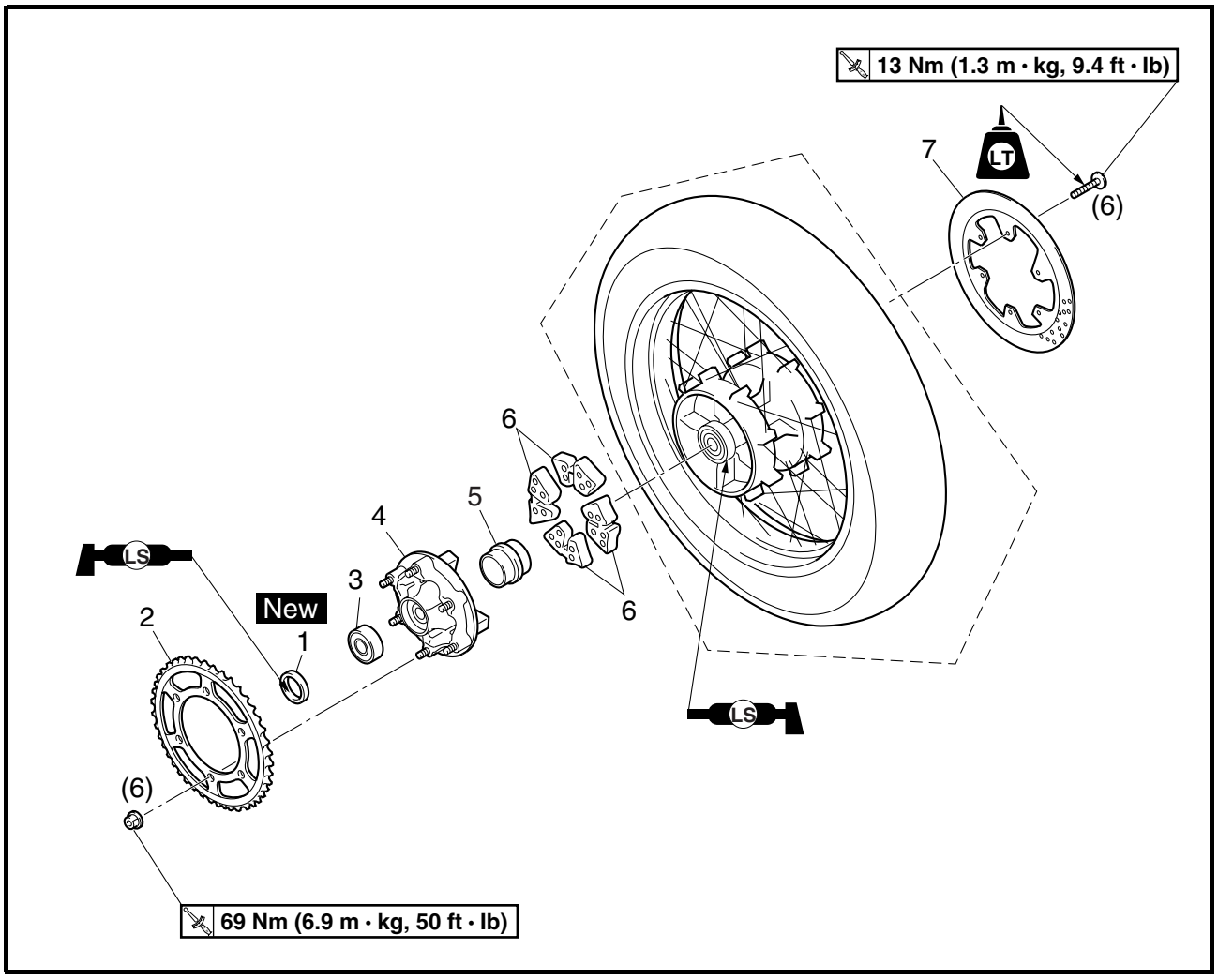

Order	Job/Part	Q'ty	Remarks
	Removing the brake disc and rear wheel sprocket		Remove the parts in the order listed.
1	Oil seal	1	
2	Rear wheel sprocket	1	
3	Bearing	1	
4	Rear wheel drive hub	1	
5	Spacer	1	
6	Rear wheel drive hub damper	4	
7	Rear brake disc	1	
			For installation, reverse the removal procedure.

http://manuals.magnamaniac.com

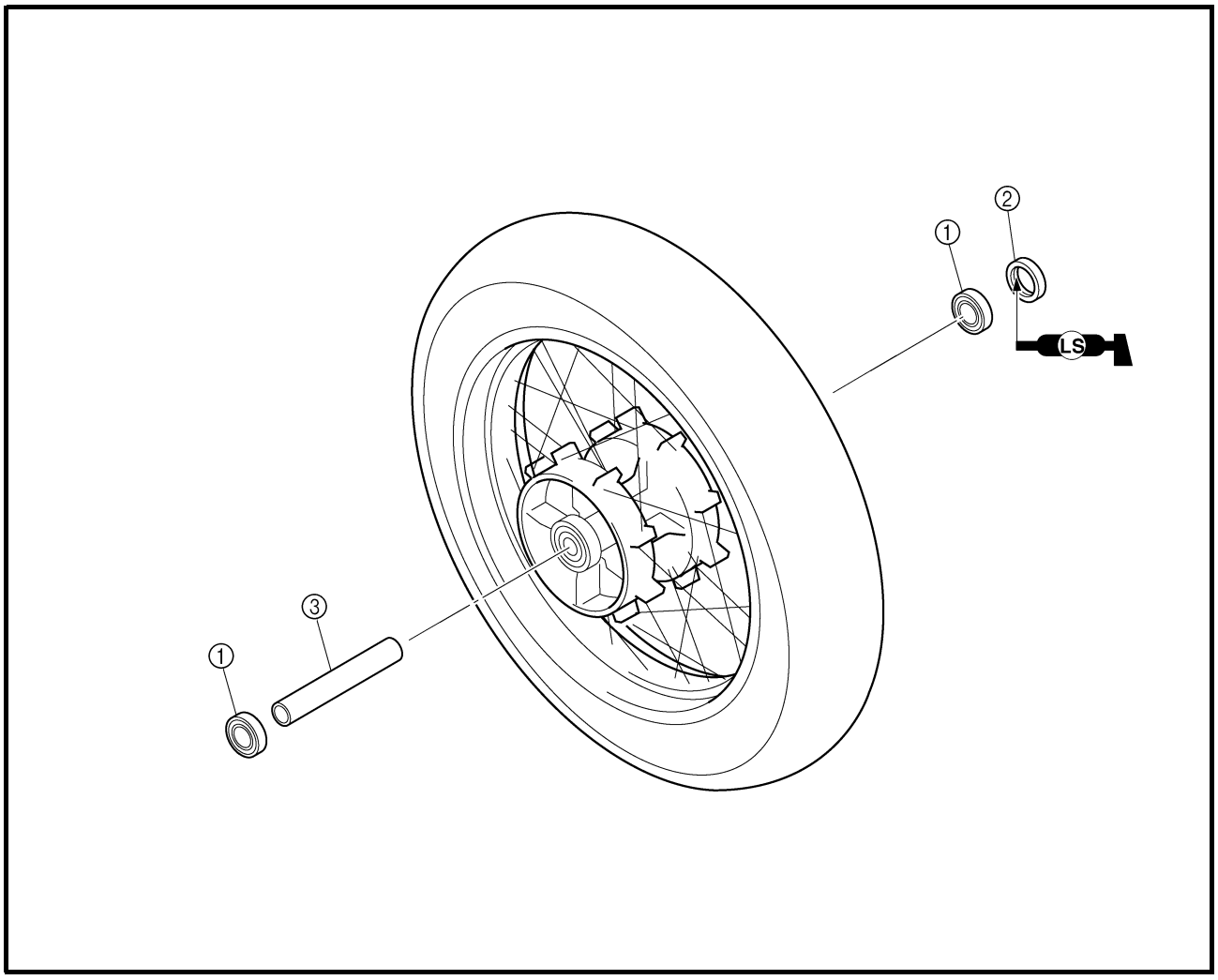

Order	Job/Part	Q'ty	Remarks
	Disassembling the rear wheel		Remove the parts in the order listed.
①	Bearing	2	
②	Oil seal	1	
③	Spacer	1	
			For assembly, reverse the disassembly procedure.

http://manuals.magnamaniac.com

EAS00561
REMOVING THE REAR WHEEL

1. Stand the motorcycle on a level surface.

⚠ WARNING

Securely support the motorcycle so that there is no danger of it falling over.

NOTE:

Place the motorcycle on a suitable stand so that the rear wheel is elevated.

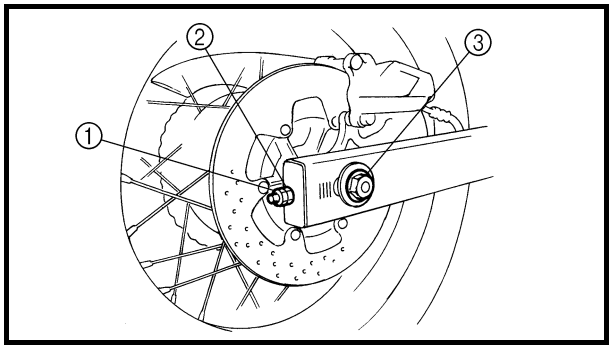

2. Loosen:
   - locknut ①
   - adjusting nut ②
3. Remove:
   - stabilizer (XT660X)
   - chain cover
   - wheel axle nut ③
   - washer (N)
   - wheel axle
   - washer (O)
   - rear wheel

NOTE:

Push the rear wheel forward and remove the drive chain from the rear wheel sprocket.

4. Remove:
   - brake caliper

NOTE:

Do not depress the brake pedal when removing the brake caliper.

EAS00566
CHECKING THE REAR WHEEL

1. Check:
   - wheel axle
   - rear wheel
   - wheel bearings
   - oil seals

   Refer to “CHECKING THE FRONT WHEEL”.

http://manuals.magnamaniac.com

2. Check:
   • tire
   • rear wheel
   Damage/wear → Replace.
   Refer to “CHECKING THE TIRES” in chapter 3.
3. Check:
   • spokes
   Refer to “CHECKING THE FRONT WHEEL”.
4. Measure:
   • radial wheel runout
   • lateral wheel runout
   Refer to “CHECKING THE FRONT WHEEL”.

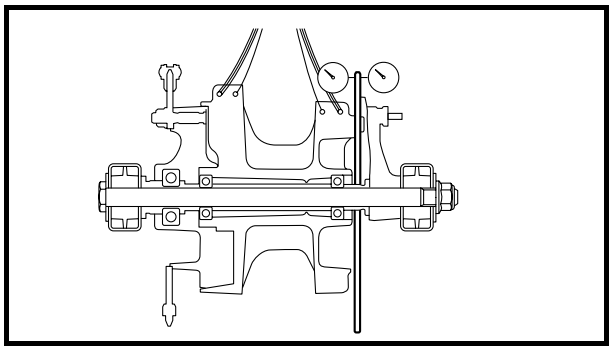

EAS00527
CHECKING THE REAR BRAKE DISC

1. Check:
   • brake disc
   Damage/galling → Replace.
2. Measure:
   • brake disc deflection
   Out of specification → Correct the brake disc deflection or replace the brake disc.

Brake disc deflection limit (maximum)
0.15 mm (0.006 in)

▼▼▼▼▼▼▼▼▼▼▼▼▼▼▼▼▼▼▼▼▼▼▼▼▼▼▼▼▼▼▼▼▼▼

a. Place the motorcycle on a suitable stand so that the rear wheel is elevated.
b. Remove the brake caliper.
c. Hold the dial gauge at a right angle against the brake disc surface.
d. Measure the deflection 1.5 mm (0.06 in) below the edge of the brake disc.

▲▲▲▲▲▲▲▲▲▲▲▲▲▲▲▲▲▲▲▲▲▲▲▲▲▲▲▲▲▲▲▲▲▲

http://manuals.magnamaniac.com

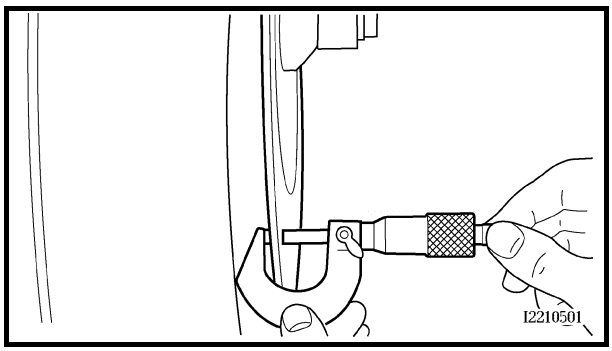

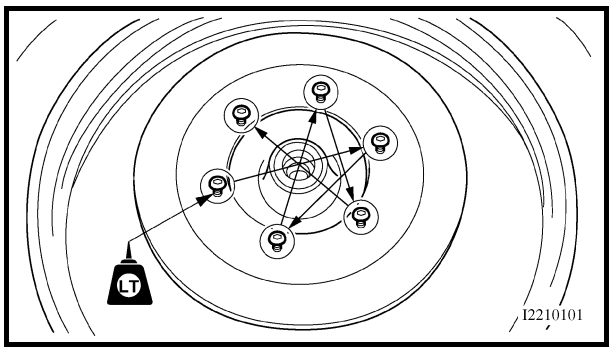

3. Measure:
   - brake disc thickness
     Measure the brake disc thickness at a few different locations.
     Out of specification → Replace.

Brake disc thickness limit (minimum)
4.5 mm (0.18 in)

4. Adjust:
   - brake disc deflection

▼▼▼▼▼▼▼▼▼▼▼▼▼▼▼▼▼▼▼▼▼▼▼▼▼▼▼▼▼▼▼▼▼▼

a. Remove the brake disc.
b. Rotate the brake disc by one bolt hole.
c. Install the brake disc.

NOTE:
Tighten the brake disc bolts in stages and in a crisscross pattern.

Brake disc bolt
13 Nm (1.3 m · kg, 9.4 ft · lb)
LOCTITE®

d. Measure the brake disc deflection.
e. If out of specification, repeat the adjustment steps until the brake disc deflection is within specification.
f. If the brake disc deflection cannot be brought within specification, replace the brake disc.

▲▲▲▲▲▲▲▲▲▲▲▲▲▲▲▲▲▲▲▲▲▲▲▲▲▲▲▲▲▲▲▲▲▲

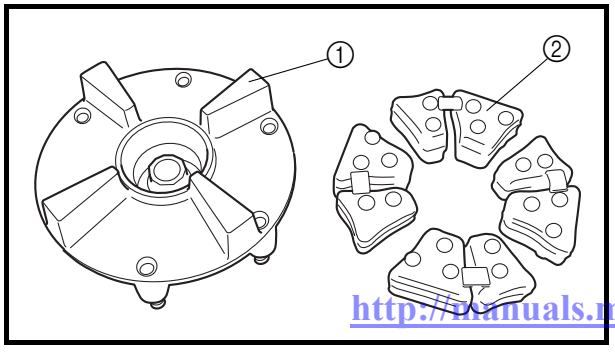

EAS00567
CHECKING THE REAR WHEEL DRIVE HUB

1. Check:
   - rear wheel drive hub ①
     Cracks/damage → Replace.
   - rear wheel drive hub dampers ②
     Damage/wear → Replace.

http://manuals.magnamaniac.com

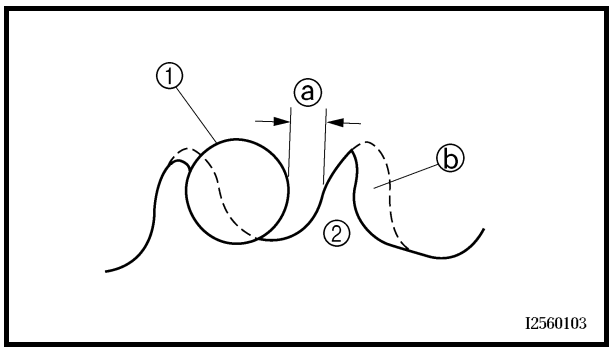

EAS00568
CHECKING AND REPLACING THE REAR WHEEL SPROCKET

1. Check:
   - rear wheel sprocket
     More than 1/4 tooth ⓐ wear → Replace the rear wheel sprocket.
     Bent teeth → Replace the rear wheel sprocket.

ⓑ Correct
① Drive chain roller
② Rear wheel sprocket

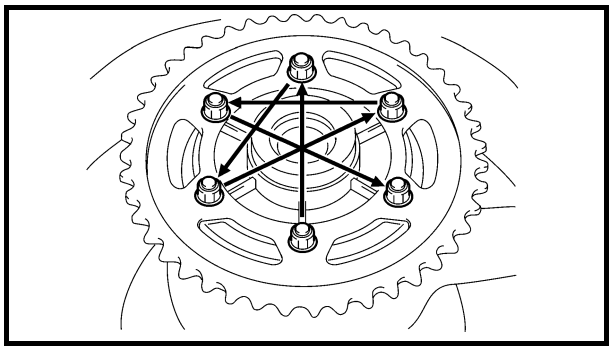

2. Replace:
   - rear wheel sprocket

▼▼▼▼▼▼▼▼▼▼▼▼▼▼▼▼▼▼▼▼▼▼▼▼▼▼▼▼▼▼▼▼

a. Remove the self-locking nuts and the rear wheel sprocket.
b. Clean the rear wheel drive hub with a clean cloth, especially the surfaces that contact the sprocket.
c. Install the new rear wheel sprocket.

	Rear wheel sprocket self-locking nut **69 Nm (6.9 m · kg, 50 ft · lb)**

NOTE:
Tighten the self-locking nuts in stages and in a crisscross pattern.

▲▲▲▲▲▲▲▲▲▲▲▲▲▲▲▲▲▲▲▲▲▲▲▲▲▲▲▲▲▲▲▲

EAS00571
INSTALLING THE REAR WHEEL

1. Lubricate:
   - wheel axle
   - oil seal lips

	Recommended lubricant **Lithium-soap-based grease**

http://manuals.magnamaniac.com

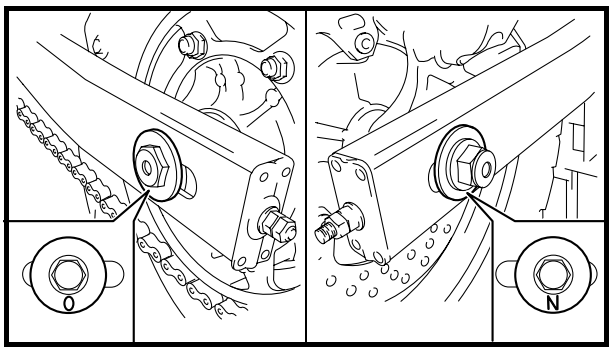

2. Install:
   - rear wheel
   - washer (O)
   - rear axle
   - washer (N)
   - rear axle nut

NOTE:
Install the washer with the "N" mark on the right-hand side of the vehicle and the washer with the "O" mark on the left-hand side of the vehicle. Be sure to install both washers with the marks facing outward.

3. Adjust:
   - drive chain slack

Drive chain slack
40.0 ~ 55.0 mm (1.57 ~ 2.17 in)

Refer to "ADJUSTING THE DRIVE CHAIN SLACK" in chapter 3.

4. Tighten:
   - wheel axle nut

105 Nm (10.5 m · kg, 75 ft · lb)

5. Install:
   - chain cover
   - chain cover bolts

7 Nm (0.7 m · kg, 5.1 ft · lb)

   - stabilizer (XT660X)

7 Nm (0.7 m · kg, 5.1 ft · lb)

EAS00575
ADJUSTING THE REAR WHEEL STATIC BALANCE

NOTE:
- After replacing the tire, wheel or both, the rear wheel static balance should be adjusted.
- Adjust the rear wheel static balance with the brake disc and rear wheel drive hub installed.

1. Adjust:
   - rear wheel static balance
     Refer to "ADJUSTING THE FRONT WHEEL STATIC BALANCE".

http://manuals.magnamenic.com

EAS00577
FRONT AND REAR BRAKES
FRONT BRAKE PADS (XT660R)

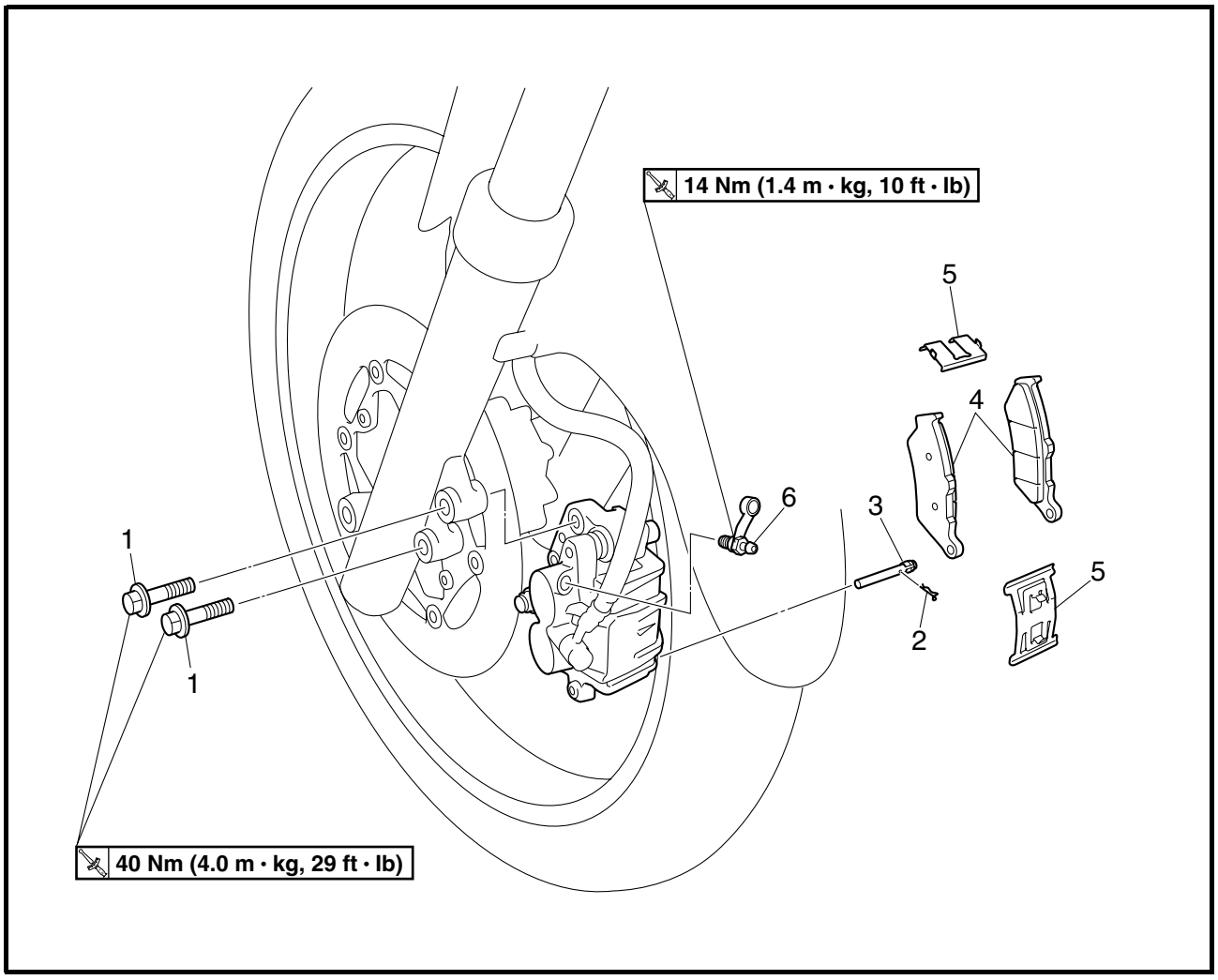

Order	Job/Part	Q'ty	Remarks
	Removing the front brake pads		Remove the parts in the order listed.
1	Brake caliper bolt	2	
2	Brake pad clip	1	
3	Brake pad pin	1	Refer to "REPLACING THE FRONT BRAKE PADS".
4	Brake pad	2	
5	Brake pad spring	2	
6	Bleed screw	1	
			For installation, reverse the removal procedure.

http://manuals.magnamaniac.com

FRONT BRAKE PADS (XT660X)

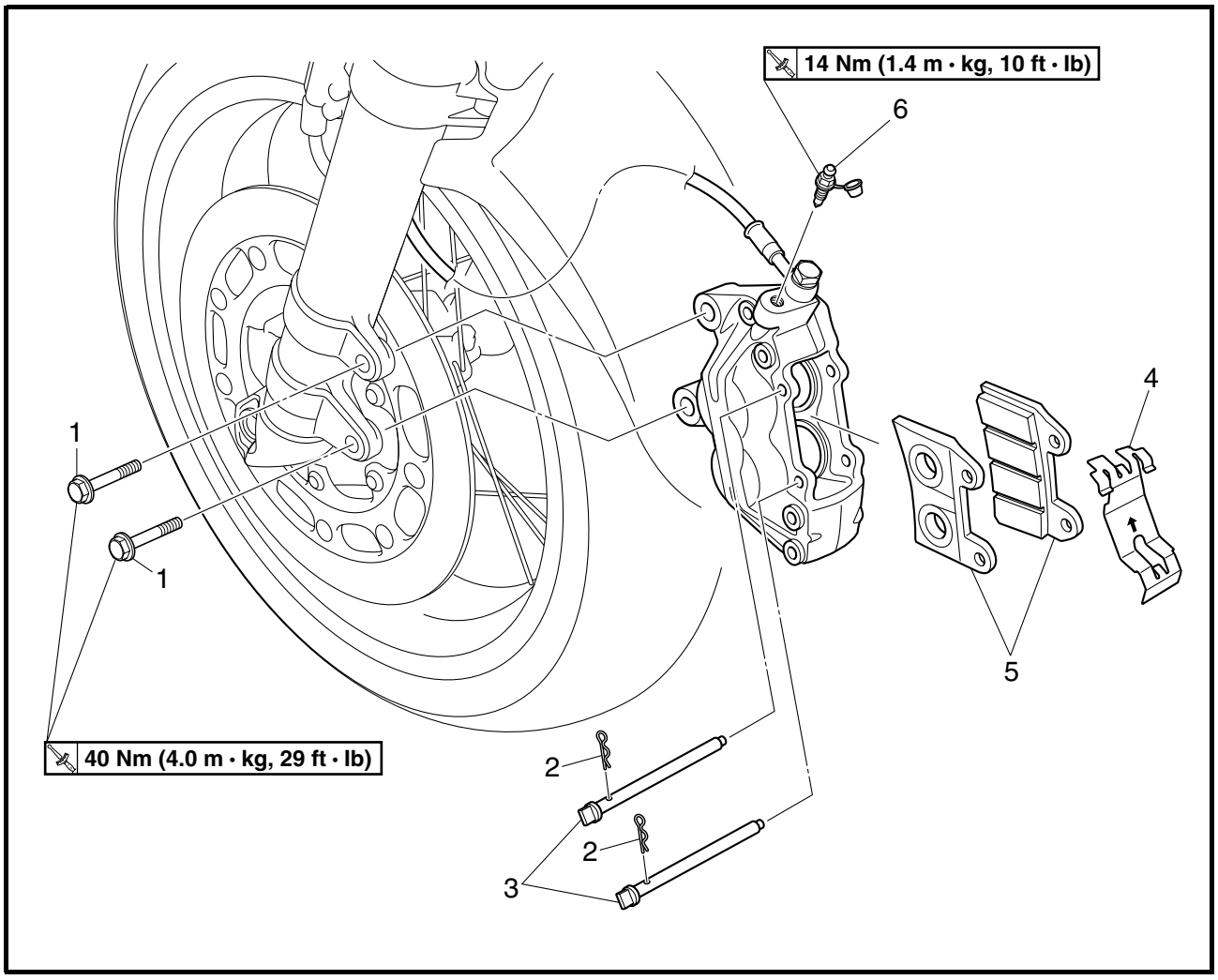

Order	Job/Part	Q'ty	Remarks
	Removing the front brake pads		Remove the parts in the order listed.
1	Brake caliper bolt	2	
2	Brake pad clip	2	
3	Brake pad pin	2	Refer to "REPLACING THE FRONT BRAKE PADS".
4	Brake pad spring	1	
5	Brake pad	2	
6	Bleed screw	1	
			For installation, reverse the removal procedure.

http://manuals.magnamaniac.com

EAS00578

REAR BRAKE PADS

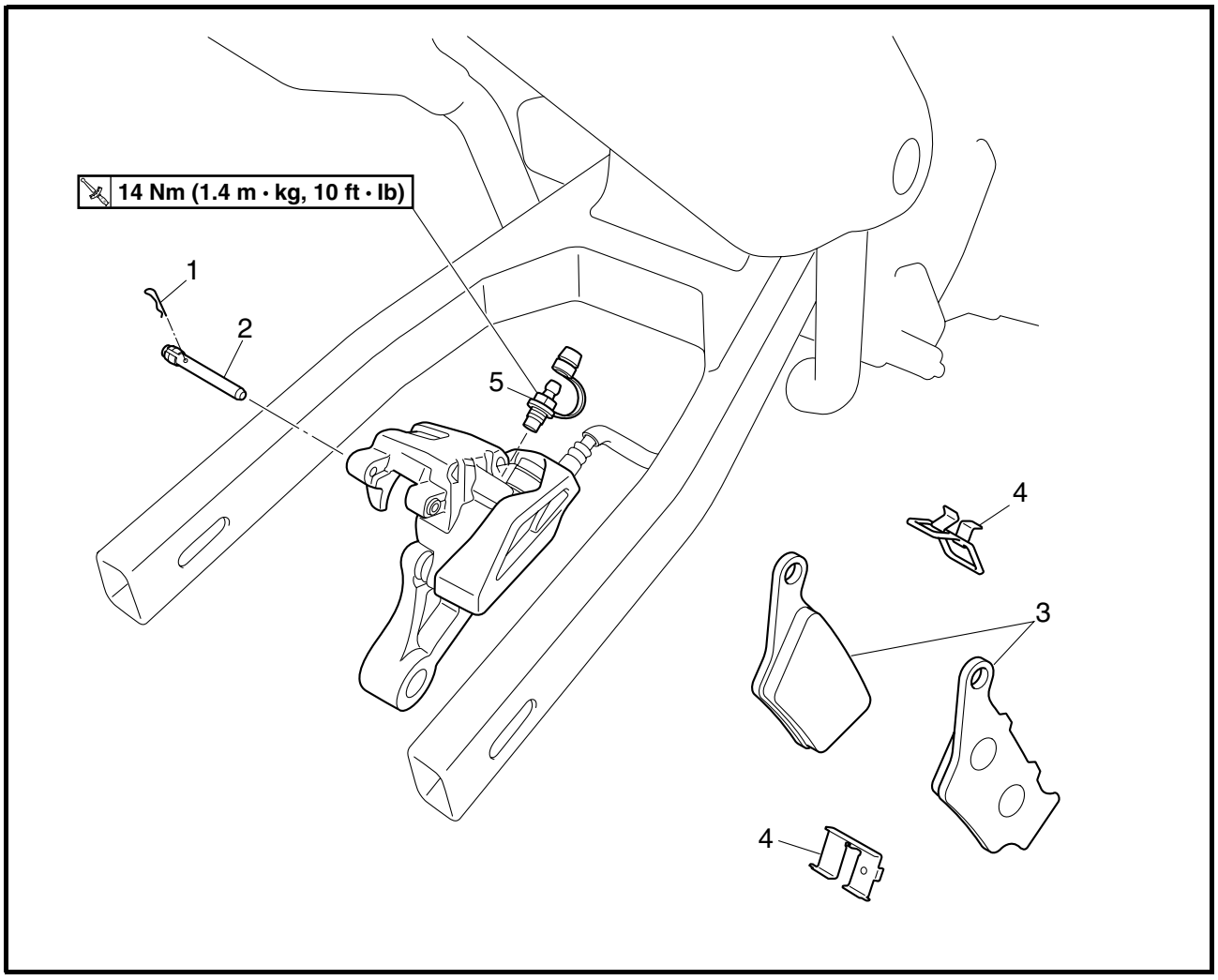

Order	Job/Part	Q'ty	Remarks
	Removing the rear brake pads		Remove the parts in the order listed.
	Rear wheel		Refer to "REAR WHEEL, BRAKE DISC, AND REAR WHEEL SPROCKET".
1	Brake pad pin	1	Refer to "REPLACING THE REAR BRAKE PADS".
2	Retaining bolt	1	
3	Brake pad	2	
4	Brake pad spring	2	
5	Bleed screw	1	
			For installation, reverse the removal procedure.

http://manuals.magnamaniac.com

EAS00579

CAUTION:

Disc brake components rarely require disassembly.
Therefore, always follow these preventive measures:

- **Never disassemble brake components unless absolutely necessary.**
- **If any connection on the hydraulic brake system is disconnected, the entire brake system must be disassembled, drained, cleaned, properly filled, and bled after reassembly.**
- **Never use solvents on internal brake components.**
- **Use only clean or new brake fluid for cleaning brake components.**
- **Brake fluid may damage painted surfaces and plastic parts. Therefore, always clean up any spilt brake fluid immediately.**
- **Avoid brake fluid coming into contact with the eyes as it can cause serious injury.**

FIRST AID FOR BRAKE FLUID ENTERING THE EYES:

- **Flush with water for 15 minutes and get immediate medical attention.**

A

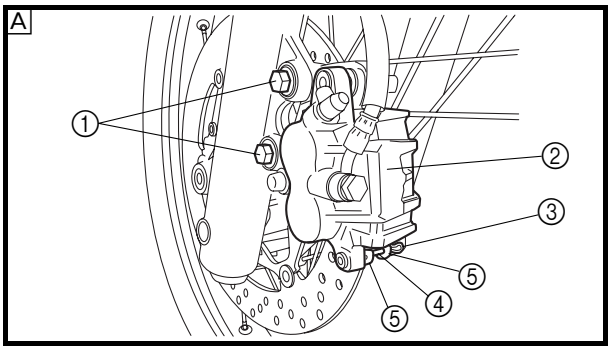

B

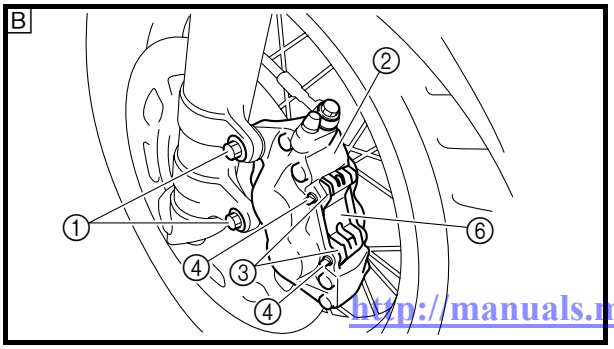

EAS00581

REPLACING THE FRONT BRAKE PADS

NOTE:

When replacing the brake pads, it is not necessary to disconnect the brake hose or disassemble the brake caliper.

1. Remove:
   - brake caliper bolts ①
   - brake caliper ②
   - brake pad clip(s) ③
   - brake pad pin(s) ④
   - brake pads ⑤
   - brake pad springs (XT660R)
   - brake pad spring ⑥ (XT660X)

A XT660R
B XT660X

http://manuals.magnamaniac.com

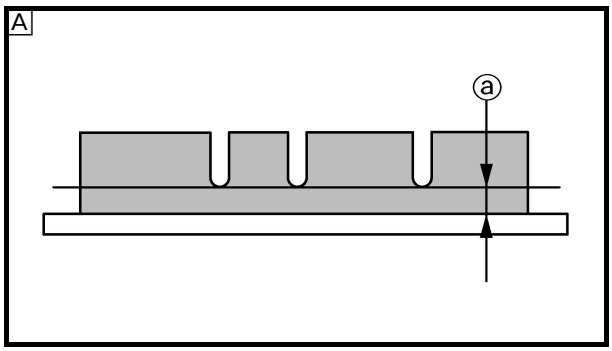

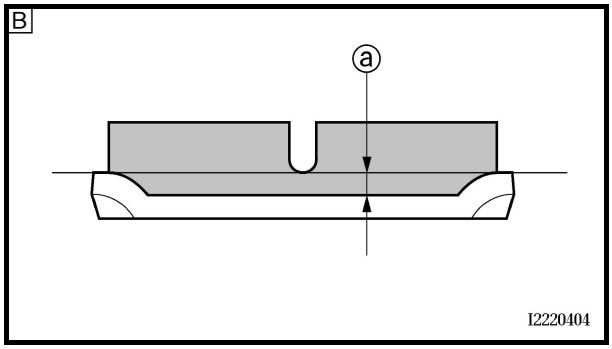

2. Measure:
   - brake pad wear limit ⓐ
     Out of specification → Replace the brake pads as a set.

	Brake pad wear limit **1.0 mm (0.04 in)**

A XT660R
B XT660X

3. Check:
   - brake pad pin(s)
     Damage/wear → Replace.

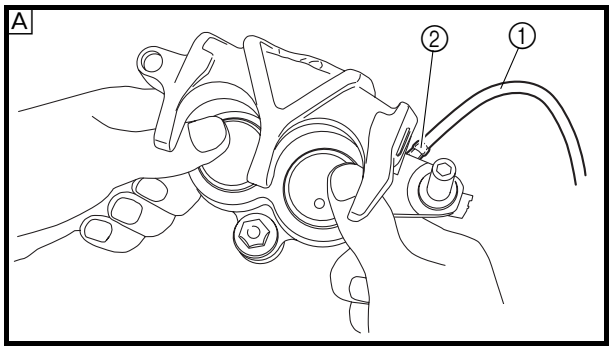

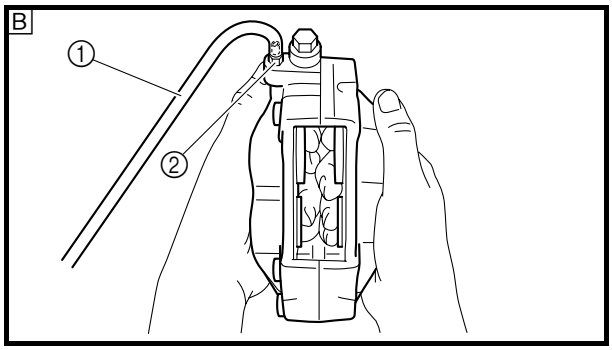

4. Install:
   - brake pad springs
   - brake pads

NOTE:
Always replace the brake pads and brake pad springs as a set.

▼▼▼▼▼▼▼▼▼▼▼▼▼▼▼▼▼▼▼▼▼▼▼▼▼▼▼▼▼▼▼▼▼▼

a. Connect a clear plastic hose ① tightly to the bleed screw ②. Put the other end of the hose into an open container.

A XT660R
B XT660X

b. Loosen the bleed screw and push the brake caliper pistons into the brake caliper with your finger.
c. Tighten the bleed screw.

	Bleed screw **14 Nm (1.4 m · kg, 1.0 ft · lb)**

http://manuals.magnamaniac.com

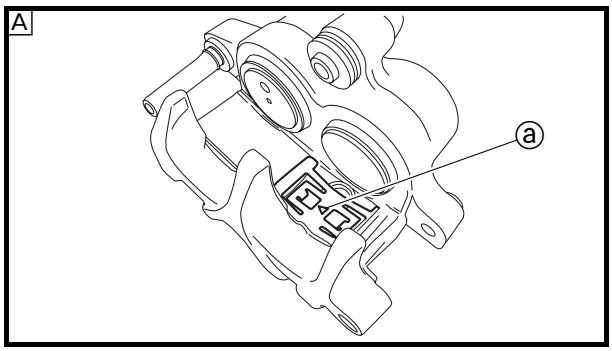

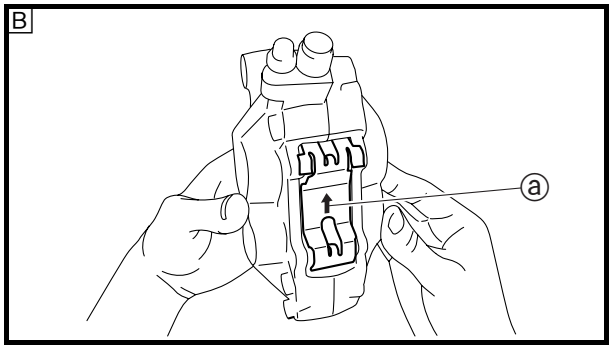

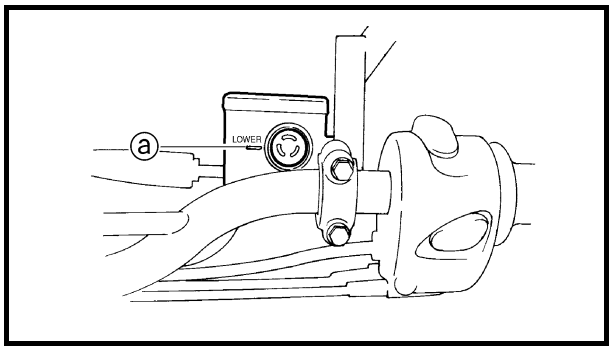

d. Install new brake pads and new brake pad springs.

NOTE:
The arrow ⓐ on the brake pad spring must point in the direction of rotation.

Ⓐ XT660R
Ⓑ XT660X

▲▲▲▲▲▲▲▲▲▲▲▲▲▲▲▲▲▲▲▲▲▲▲▲▲▲▲▲▲▲

5. Install:
   - brake pad pin
   - brake pad clip
   - brake caliper **40 Nm (4.0 m · kg, 29 ft · lb)**

6. Check:
   - brake fluid level
     Below the minimum level mark ⓐ → Add the recommended brake fluid to the proper level.
     Refer to “CHECKING THE BRAKE FLUID LEVEL” in chapter 3.
7. Check:
   - brake lever operation
     Soft or spongy feeling → Bleed the brake system.
     Refer to “BLEEDING THE HYDRAULIC BRAKE SYSTEM” in chapter 3.

EAS00583
REPLACING THE REAR BRAKE PADS

NOTE:
When replacing the brake pads, it is not necessary to disconnect the brake hose or disassemble the brake caliper.

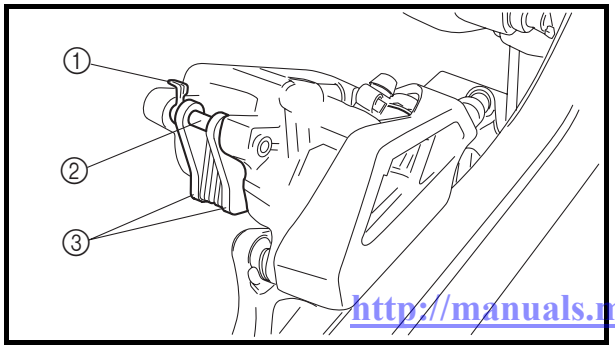

1. Remove:
   - rear wheel
   - brake caliper
     Refer to “REAR WHEEL, BRAKE DISC, AND REAR WHEEL SPROCKET”.
2. Remove:
   - brake pad clip ①
   - brake pad pin ②
   - brake pads ③
   - brake pad springs

http://manuals.magnamaniac.com

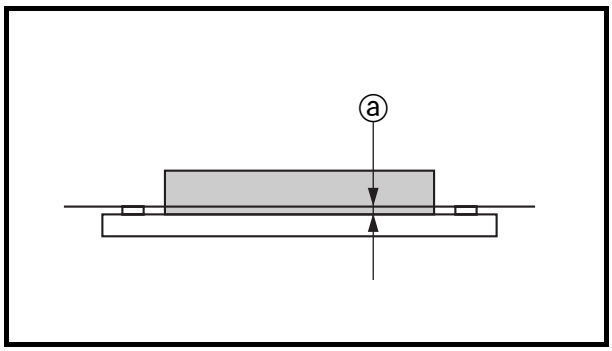

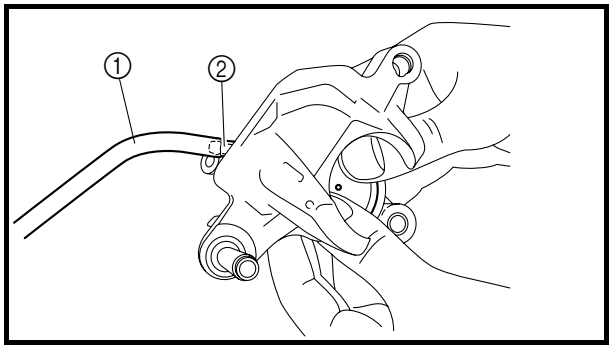

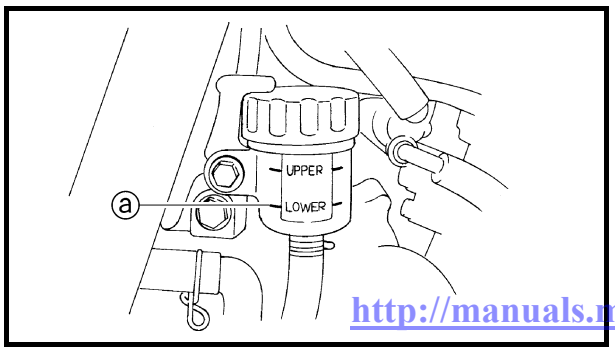

3. Measure:
   • brake pad wear limit ⓐ
   Out of specification → Replace the brake pads as a set.

	Brake pad wear limit **1.0 mm (0.04 in)**

4. Install:
   • brake pad springs
   • brake pads

NOTE:
Always replace the brake pads and brake pad springs as a set.

▼▼▼▼▼▼▼▼▼▼▼▼▼▼▼▼▼▼▼▼▼▼▼▼▼▼▼▼▼▼▼▼▼▼

a. Connect a clear plastic hose ① securely to the bleed screw ②. Put the other end of the hose into an open container.
b. Loosen the bleed screw and push the brake caliper piston into the brake caliper with your finger.
c. Tighten the bleed screw.

	Bleed screw **14 Nm (1.4 m · kg, 10 ft · lb)**

d. Install new brake pads and new brake pad springs.

▲▲▲▲▲▲▲▲▲▲▲▲▲▲▲▲▲▲▲▲▲▲▲▲▲▲▲▲▲▲▲▲▲▲

5. Install:
   • brake pad pin
   • brake pad clip
   • brake caliper
   • rear wheel
   Refer to “REAR WHEEL, BRAKE DISC, AND REAR WHEEL SPROCKET”.
6. Check:
   • brake fluid level
   Below the minimum level mark ⓐ → Add the recommended brake fluid to the proper level.
   Refer to “CHECKING THE BRAKE FLUID LEVEL” in chapter 3.
7. Check:
   • brake pedal operation
   Soft or spongy feeling →Bleed the brake system.
   Refer to “BLEEDING THE HYDRAULIC BRAKE SYSTEM” in chapter 3.

http://manuals.magnamae.com

EAS00584

FRONT BRAKE MASTER CYLINDER

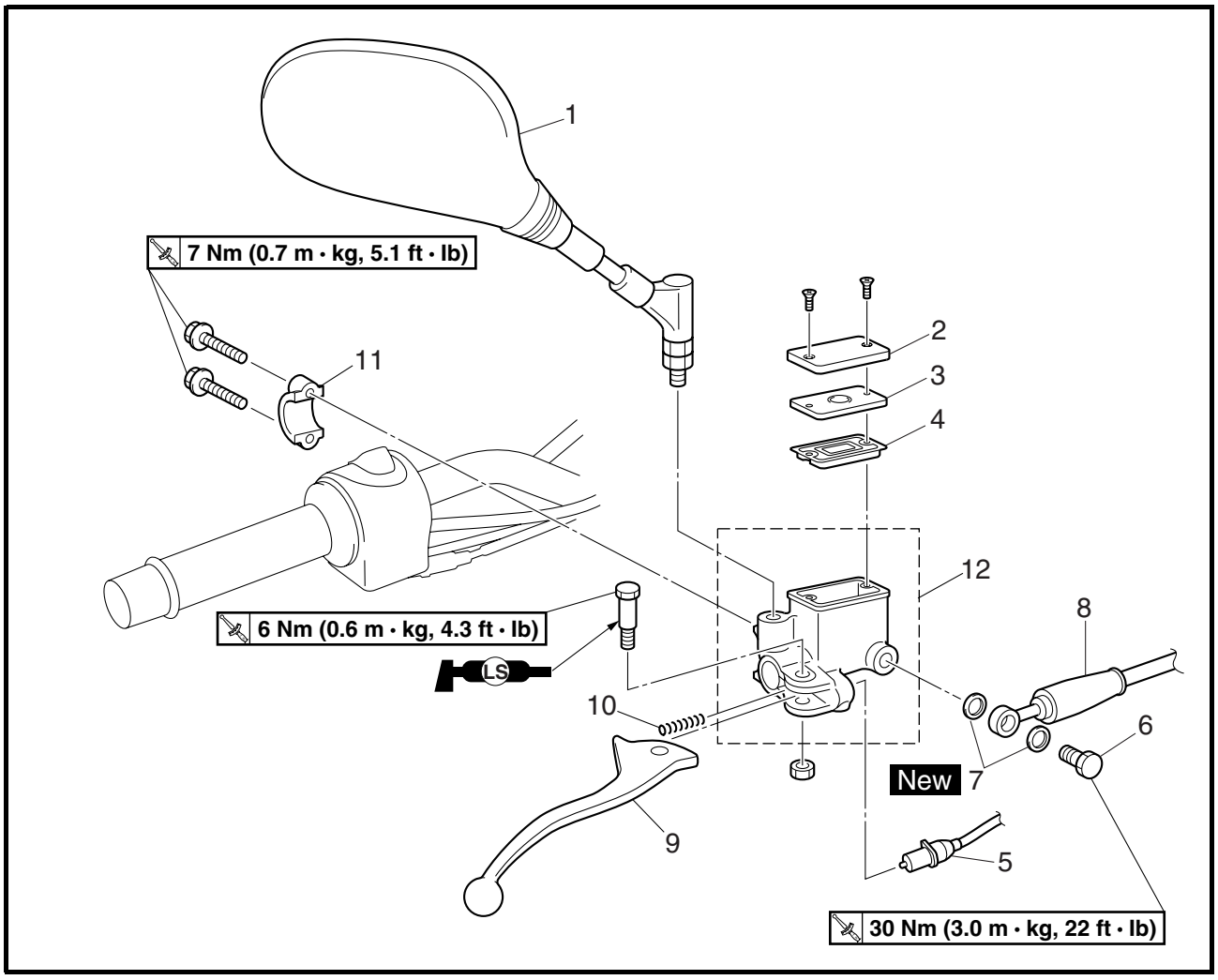

Order	Job/Part	Q'ty	Remarks
	Removing the front brake master cylinder		Remove the parts in the order listed.
	Brake fluid		Drain.
1	Rearview mirror (right)	1	
2	Brake master cylinder reservoir cap	1	
3	Brake master cylinder reservoir diaphragm holder	1	
4	Brake master cylinder reservoir diaphragm	1	

http://manuals.magnamaniac.com

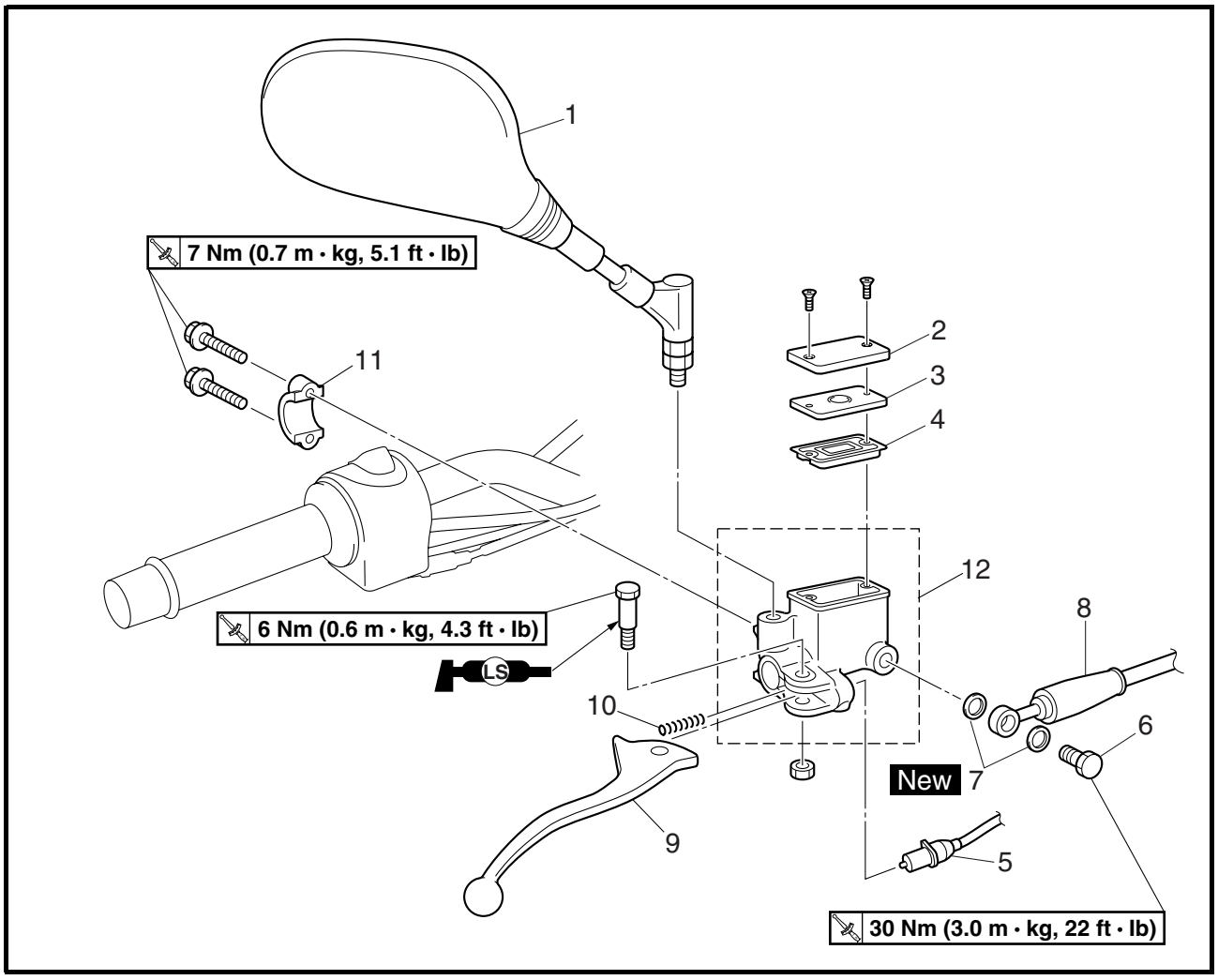

Order	Job/Part	Q'ty	Remarks
5	Front brake light switch	1	Disconnect. ┐ Refer to "DISASSEMBLING THE FRONT BRAKE MASTER CYLINDER" and "ASSEMBLING AND INSTALLING THE FRONT BRAKE MASTER CYLINDER".
6	Union bolt	1	
7	Copper washer	2	
8	Brake hose	1	Disconnect. ┘
9	Brake lever	1	
10	Spring	1	
11	Brake master cylinder holder	1	
12	Brake master cylinder	1	
			For installation, reverse the removal procedure.

http://manuals.magnamaniac.com

EAS00585

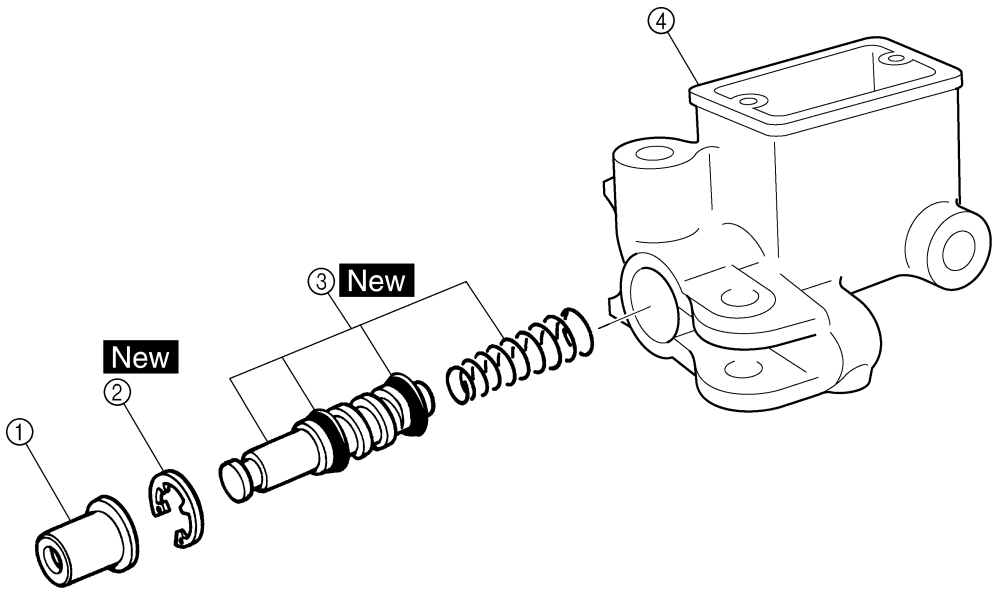

Order	Job/Part	Q'ty	Remarks
	Disassembling the front brake master cylinder		Remove the parts in the order listed.
①	Dust boot	1	
②	Circlip	1	
③	Brake master cylinder kit	1	
④	Brake master cylinder	1	
			For assembly, reverse the disassembly procedure.

http://manuals.magnamaniac.com

EAS00586

REAR BRAKE MASTER CYLINDER

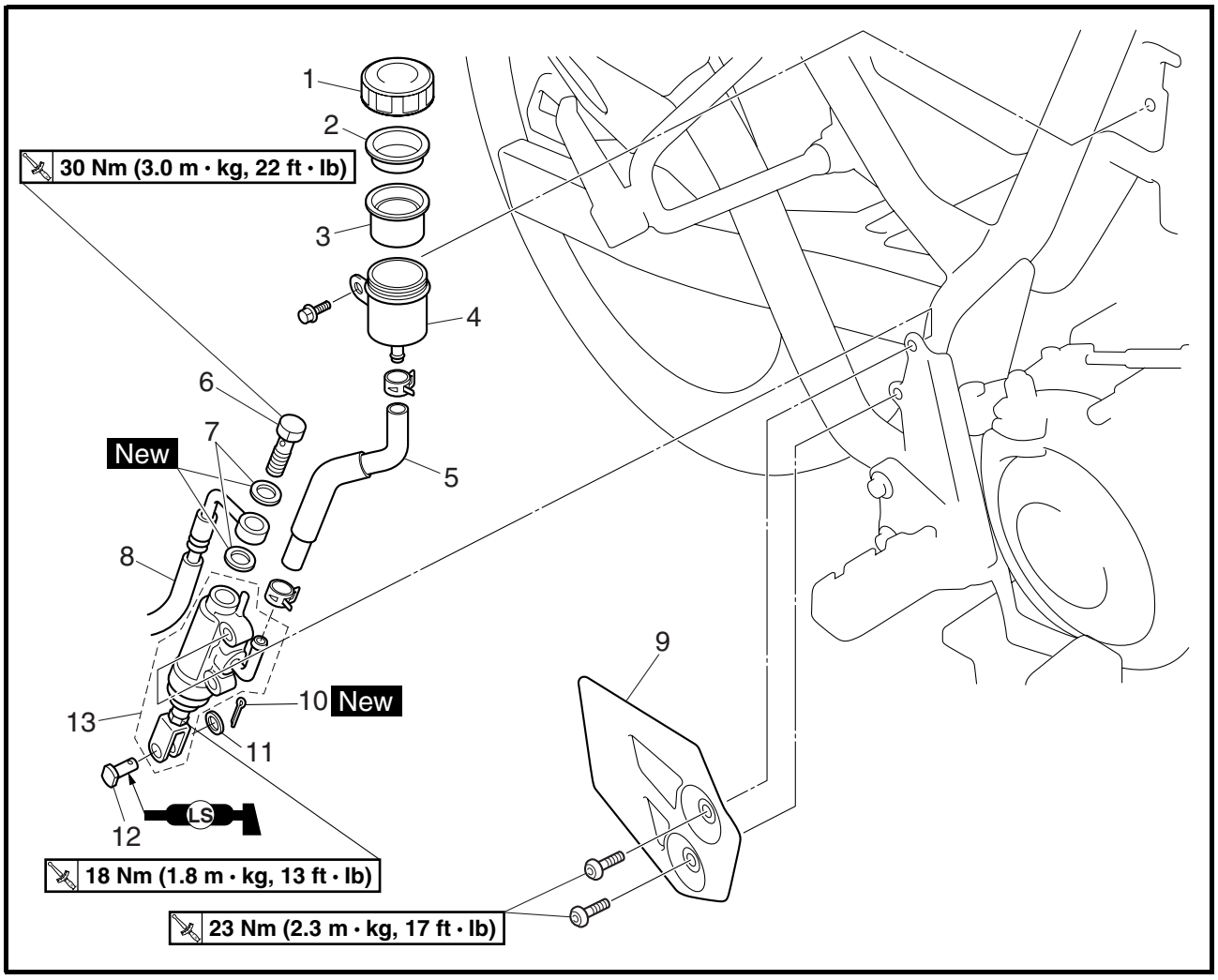

Order	Job/Part	Q'ty	Remarks
	Removing the rear brake master cylinder		Remove the parts in the order listed.
	Brake fluid		Drain.
1	Brake fluid reservoir cap	1	
2	Brake fluid reservoir diaphragm holder	1	
3	Brake fluid reservoir diaphragm	1	
4	Brake fluid reservoir	1	
5	Brake fluid reservoir hose	1	
6	Union bolt	1	Refer to "DISASSEMBLING THE REAR BRAKE MASTER CYLINDER" and "INSTALLING THE REAR BRAKE MASTER CYLINDER".
7	Copper washer	2	
8	Brake hose	1	Disconnect.
9	Right side heel plate	1	

http://manuals.magnamaniac.com

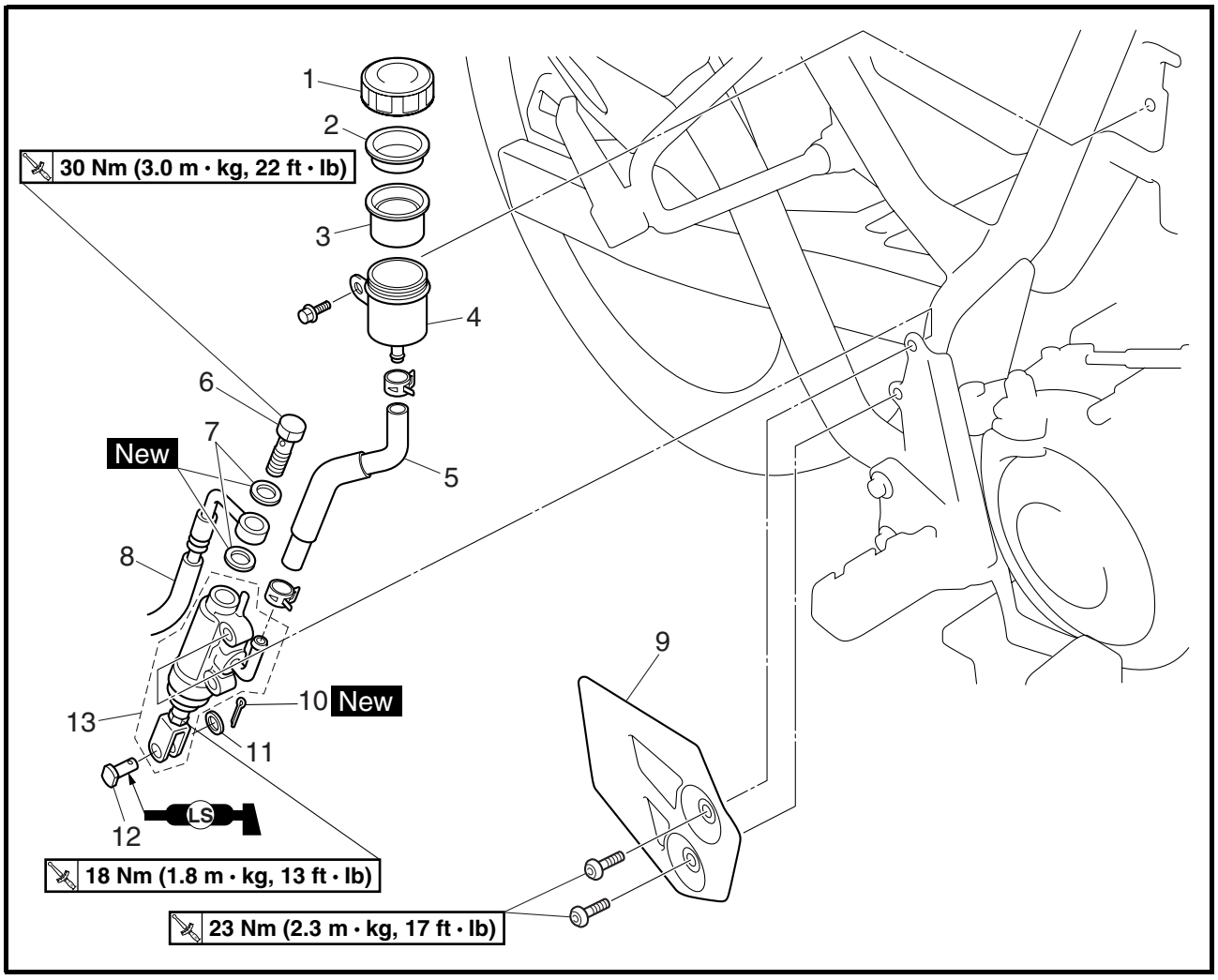

Order	Job/Part	Q'ty	Remarks
10	Cotter pin	1	
11	Washer	1	Refer to "INSTALLING THE REAR BRAKE MASTER CYLINDER".
12	Pin	1	
13	Master cylinder	1	
			For installation, reverse the removal procedure.

http://manuals.magnamaniac.com

EAS00587

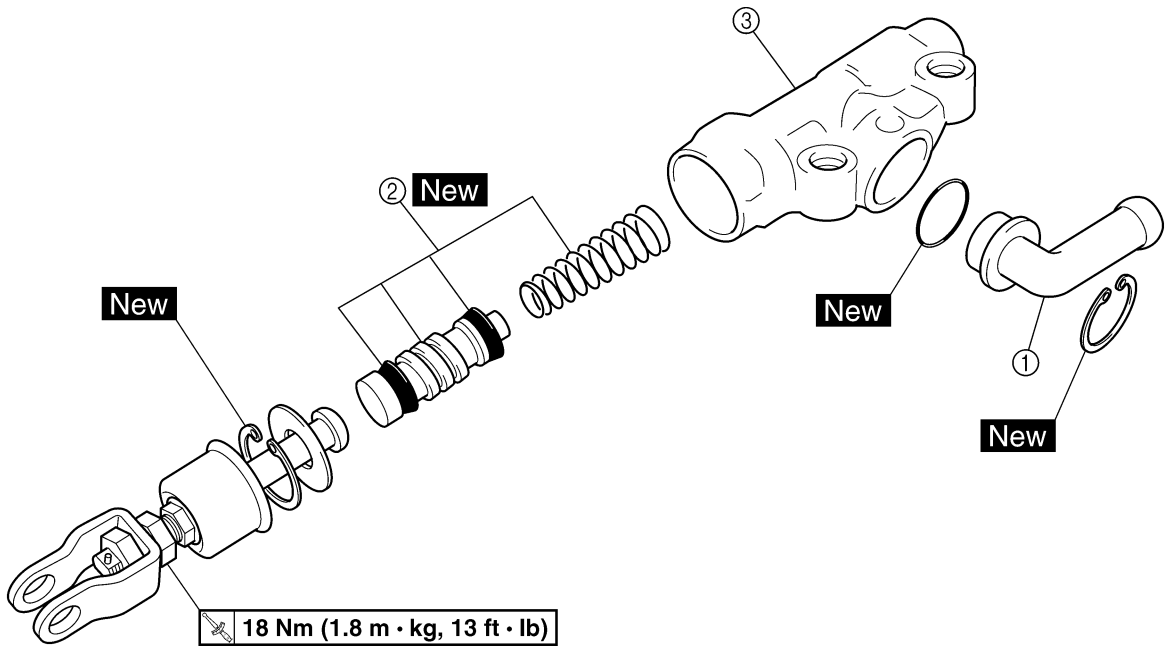

Order	Job/Part	Q'ty	Remarks
	Disassembling the rear brake master cylinder		Remove the parts in the order listed.
①	Hose joint	1	
②	Brake master cylinder kit	1	Refer to "ASSEMBLING THE REAR BRAKE MASTER CYLINDER".
③	Brake master cylinder	1	
			For assembly, reverse the disassembly procedure.

http://manuals.magnamaniac.com

EAS00588
DISASSEMBLING THE FRONT BRAKE MASTER CYLINDER

NOTE:
Before disassembling the front brake master cylinder, drain the brake fluid from the entire brake system.

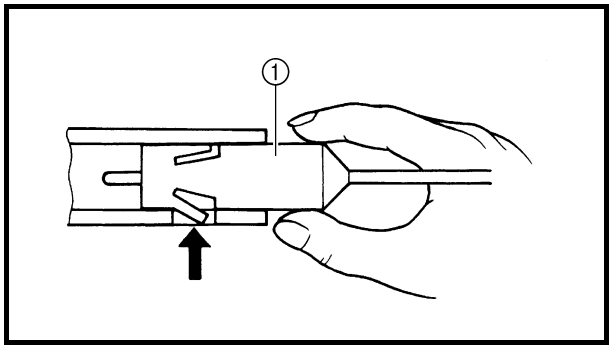

1. Disconnect:
   - front brake light switch ①

NOTE:
Push the fastener to remove the front brake light switch from the brake master cylinder.

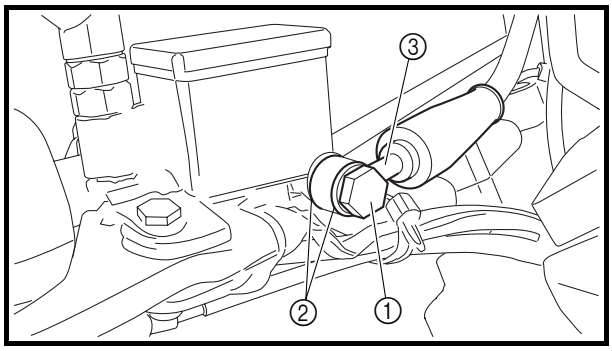

2. Remove:
   - union bolt ①
   - copper washers ②
   - brake hose ③

NOTE:
To collect any remaining brake fluid, place a container under the master cylinder and the end of the brake hose.

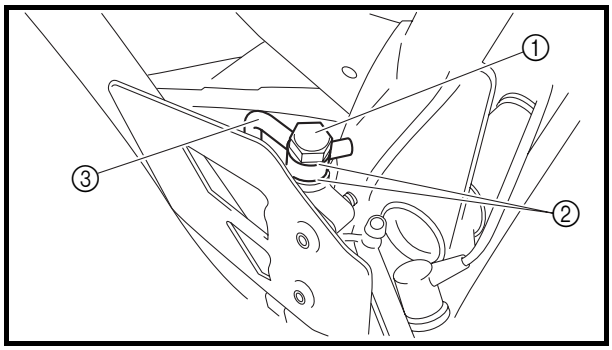

EAS00589
DISASSEMBLING THE REAR BRAKE MASTER CYLINDER

1. Remove:
   - union bolt ①
   - copper washers ②
   - brake hose ③

NOTE:
To collect any remaining brake fluid, place a container under the master cylinder and the end of the brake hose.

2. Remove:
   - right side heel plate

http://manuals.magnamaniac.com

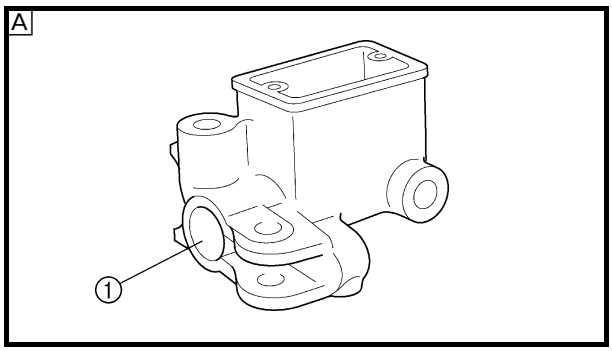

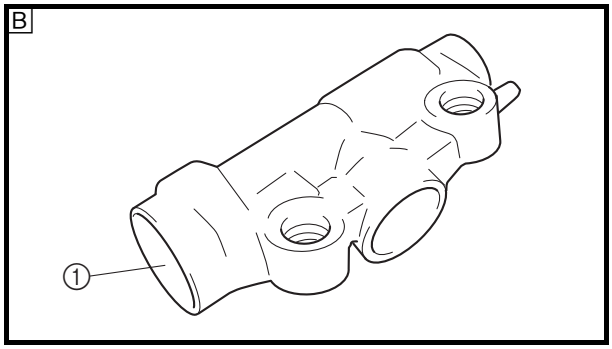

EAS00592
CHECKING THE FRONT AND REAR BRAKE MASTER CYLINDERS

The following procedure applies to both of the brake master cylinders.

1. Check:
   - brake master cylinder ①
     Damage/scratches/wear → Replace.
   - brake fluid delivery passages
     (brake master cylinder body)
     Obstruction → Blow out with compressed air.

A Front
B Rear

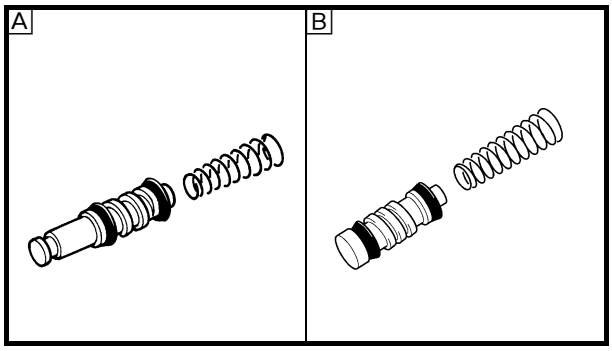

2. Check:
   - brake master cylinder kit
     Damage/scratches/wear → Replace as a set.

A Front
B Rear

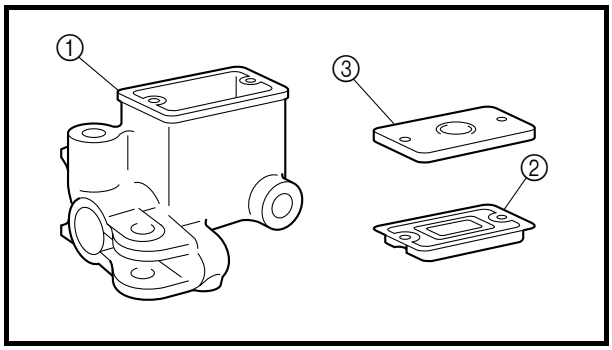

3. Check:
   - front brake master cylinder reservoir ①
     Cracks/damage → Replace.
   - front brake master cylinder reservoir diaphragm ②
     Damage/wear → Replace.
   - front brake master cylinder reservoir diaphragm holder ③
     Damage/wear → Replace.

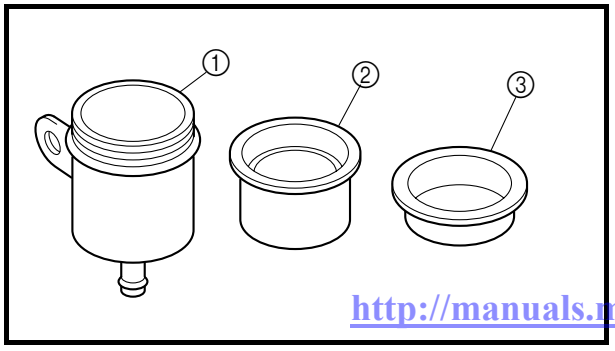

4. Check:
   - rear brake fluid reservoir ①
     Cracks/damage → Replace.
   - rear brake fluid reservoir diaphragm ②
     Cracks/damage → Replace.
   - rear brake fluid reservoir diaphragm holder ③
     Damaged/wear → Replace.

http://manuals.magnamaniac.com

5. Check:
   • brake hoses
   Cracks/damage/wear → Replace.

EAS00598
ASSEMBLING AND INSTALLING THE FRONT BRAKE MASTER CYLINDER

⚠ WARNING

- **Before installation, all internal brake components should be cleaned and lubricated with clean or new brake fluid.**
- **Never use solvents on internal brake components.**

Recommended brake fluid
DOT 4

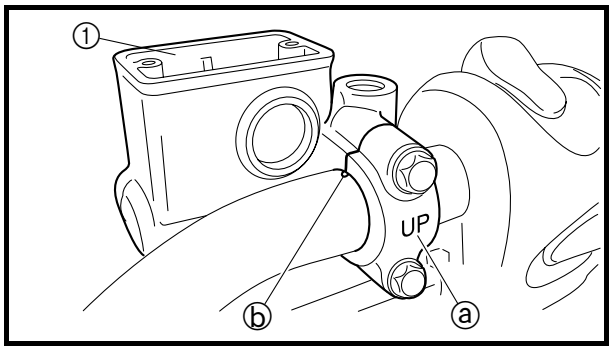

1. Install:
   • brake master cylinder ①
   • brake master cylinder holder
   7 Nm (0.7 m · kg, 5.1 ft · lb)

NOTE:

- Install the brake master cylinder holder with the "UP" mark ⓐ facing up.
- Align the end of the brake master cylinder holder with the punch mark ⓑ on the handlebar.
- First, tighten the upper bolt, then the lower bolt.

2. Install:
   • copper washers New
   • brake hose
   • union bolt **30 Nm (3.0 m · kg, 22 ft · lb)**

⚠ WARNING

Proper brake hose routing is essential to insure safe motorcycle operation. Refer to "CABLE ROUTING" in chapter 2.

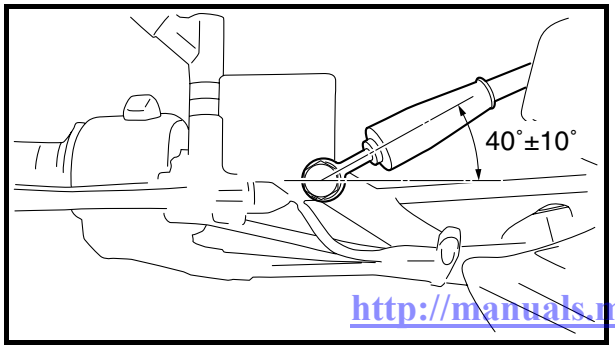

NOTE:

- Install the brake hose within the range shown.
- Turn the handlebar to the left and right to make sure the brake hose does not touch other parts (e.g., wire harness, cables, leads). Correct if necessary.

http://manuals.magnamac.com

3. Fill:
   • brake master cylinder reservoir
   (with the specified amount of the recommended brake fluid)

Recommended brake fluid
DOT 4

⚠ WARNING

- **Use only the designated brake fluid. Other brake fluids may cause the rubber seals to deteriorate, causing leakage and poor brake performance.**
- **Refill with the same type of brake fluid that is already in the system. Mixing brake fluids may result in a harmful chemical reaction, leading to poor brake performance.**
- **When refilling, be careful that water does not enter the brake master cylinder reservoir. Water will significantly lower the boiling point of the brake fluid and could cause vapor lock.**

CAUTION:

Brake fluid may damage painted surfaces and plastic parts. Therefore, always clean up any spilt brake fluid immediately.

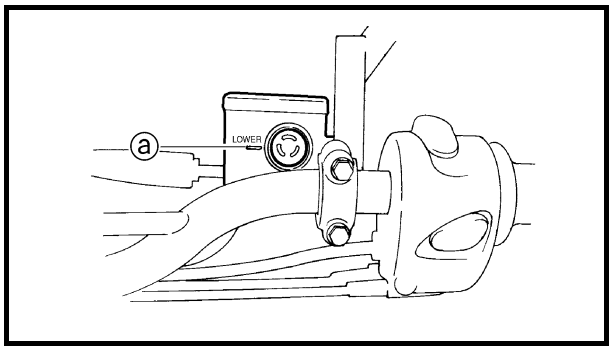

4. Bleed:
   • brake system
   Refer to “BLEEDING THE HYDRAULIC BRAKE SYSTEM” in chapter 3.
5. Check:
   • brake fluid level
   Below the minimum level mark ⓐ → Add the recommended brake fluid to the proper level.
   Refer to “CHECKING THE BRAKE FLUID LEVEL” in chapter 3.
6. Check:
   • brake lever operation
   Soft or spongy feeling → Bleed the brake system.
   Refer to “BLEEDING THE HYDRAULIC BRAKE SYSTEM” in chapter 3.

http://manuals.magnamaniac.com

EAS00608
ASSEMBLING THE REAR BRAKE MASTER CYLINDER

⚠ WARNING

- **All internal brake components should be cleaned and lubricated with new brake fluid only before installation.**

Recommended brake fluid
DOT 4

- **Whenever a master cylinder is disassembled, replace the piston seals and dust seals.**

1. Install:
   - brake master cylinder kit
   - joint ①

NOTE:
Turn the adjusting bolt ② until the clearance ⓐ is within the specified limits when install the joint ①.

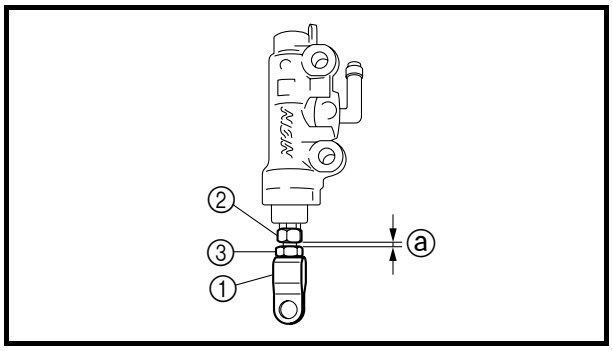

Clearance
2.1 mm (0.08 in)

2. Tighten:
   - nut ③ — **18 Nm (1.8 m · kg, 13 ft · lb)**

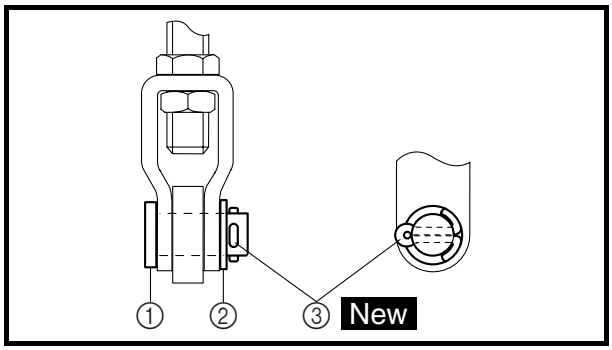

INSTALLING THE REAR BRAKE MASTER CYLINDER

1. Install:
   - brake master cylinder
   - pin ①
   - washer ②
   - cotter pin ③ New

NOTE:
Install the cotter pin and bend the ends as shown.

http://manuals.magnamaniac.com

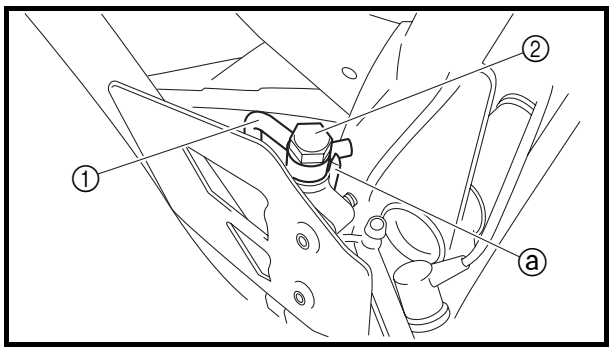

2. Install:
   - right side heel plate
     23 Nm (2.3 m · kg, 17 ft · lb)
   - copper washers **New**
   - brake hose ①
   - union bolt ② **30 Nm (3.0 m · kg, 22 ft · lb)**

⚠ WARNING

Proper brake hose routing is essential to insure safe motorcycle operation. Refer to "CABLE ROUTING" in chapter 2.

CAUTION:

When installing the brake hose onto the brake master cylinder, make sure the brake pipe touches the projection ⓐ as shown.

3. Fill:
   - brake fluid reservoir
     (with the specified amount of the recommended brake fluid)

Recommended brake fluid
DOT 4

⚠ WARNING

- **Use only the designated brake fluid. Other brake fluids may cause the rubber seals to deteriorate, causing leakage and poor brake performance.**
- **Refill with the same type of brake fluid that is already in the system. Mixing brake fluids may result in a harmful chemical reaction, leading to poor brake performance.**
- **When refilling, be careful that water does not enter the brake fluid reservoir. Water will significantly lower the boiling point of the brake fluid and could cause vapor lock.**

CAUTION:

Brake fluid may damage painted surfaces and plastic parts. Therefore, always clean up any spilt brake fluid immediately.

http://manuals.magnamaniac.com

4. Bleed:
   • brake system
   Refer to "BLEEDING THE HYDRAULIC BRAKE SYSTEM" in chapter 3.

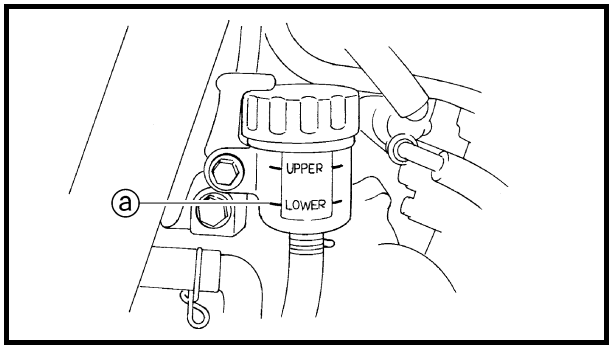

5. Check:
   • brake fluid level
   Below the minimum level mark ⓐ → Add the recommended brake fluid to the proper level.
   Refer to "CHECKING THE BRAKE FLUID LEVEL" in chapter 3.

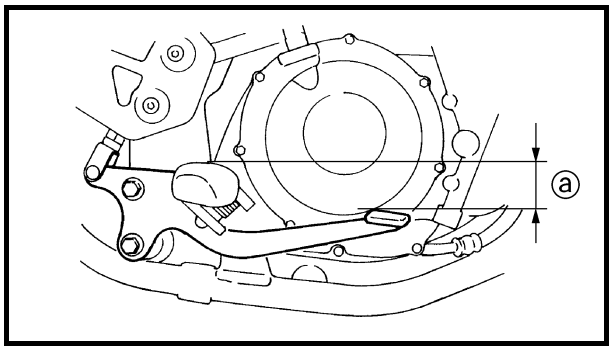

6. Adjust:
   • brake pedal position ⓐ
   Refer to "ADJUSTING THE REAR BRAKE PEDAL" in chapter 3.

Brake pedal position (below the top of the rider footrest)
12.0 mm (0.47 in)

7. Adjust:
   • rear brake light operation timing
   Refer to "ADJUSTING THE REAR BRAKE LIGHT SWITCH" in chapter 3.

http://manuals.magnamaniac.com

EAS00612

FRONT BRAKE CALIPER (XT660R)

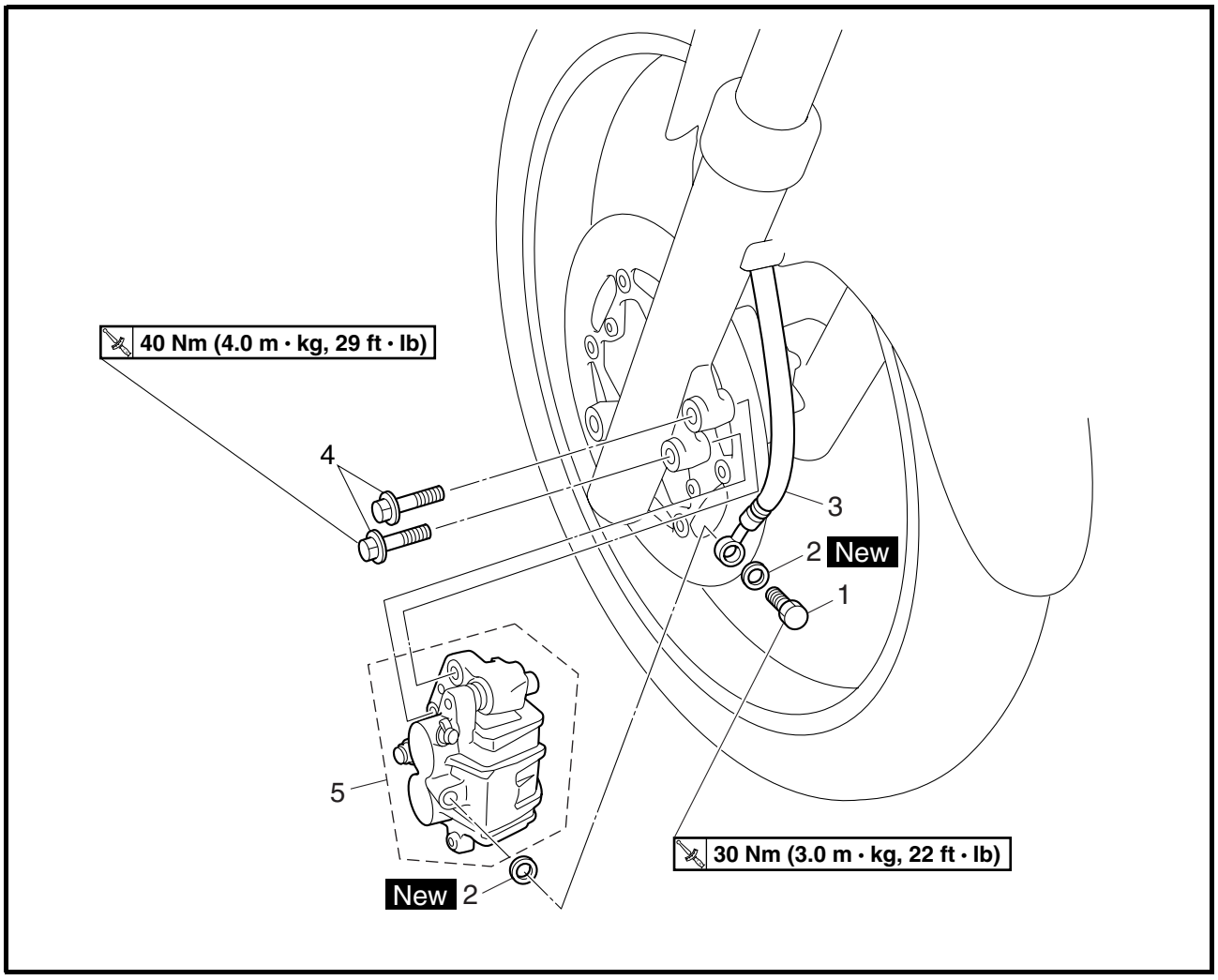

Order	Job/Part	Q'ty	Remarks
	Removing the front brake caliper		Remove the parts in the order listed.
	Brake fluid		Drain.
1	Union bolt	1	Disconnect. Refer to "INSTALLING THE FRONT BRAKE CALIPER".
2	Copper washer	2	
3	Brake hose	1	
4	Front brake caliper bolt	2	
5	Brake caliper	1	
			For installation, reverse the removal procedure.

http://manuals.magnamaniac.com

EAS00614

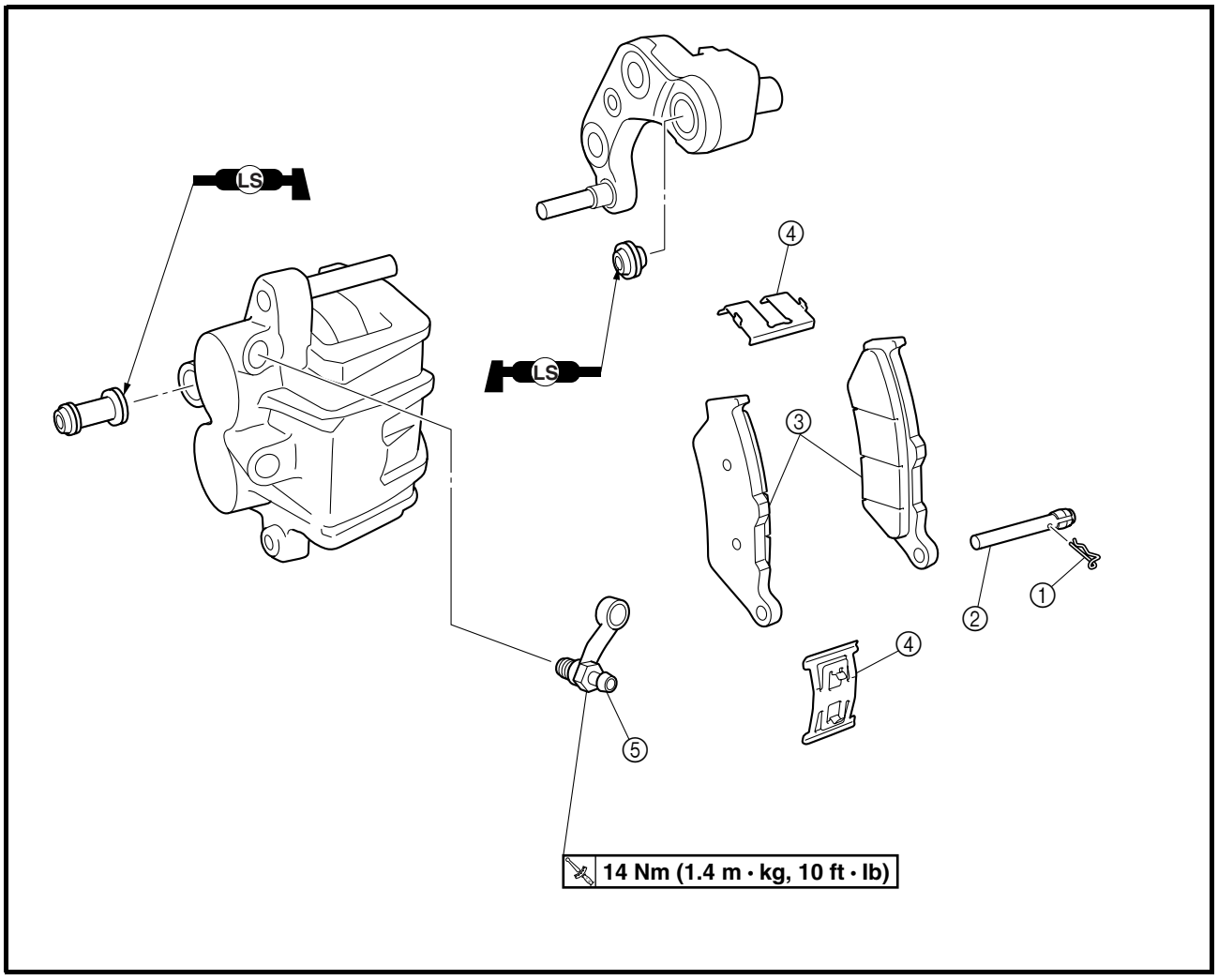

Order	Job/Part	Q'ty	Remarks
	Disassembling the front brake caliper		Remove the parts in the order listed.
①	Brake pad clip	1	
②	Brake pad pin	1	Refer to "INSTALLING THE FRONT BRAKE CALIPER".
③	Brake pad	2	
④	Brake pad spring	2	
⑤	Bleed screw	1	
			For assembly, reverse the disassembly procedure.

http://manuals.magnamaniac.com

FRONT BRAKE CALIPER (XT660X)

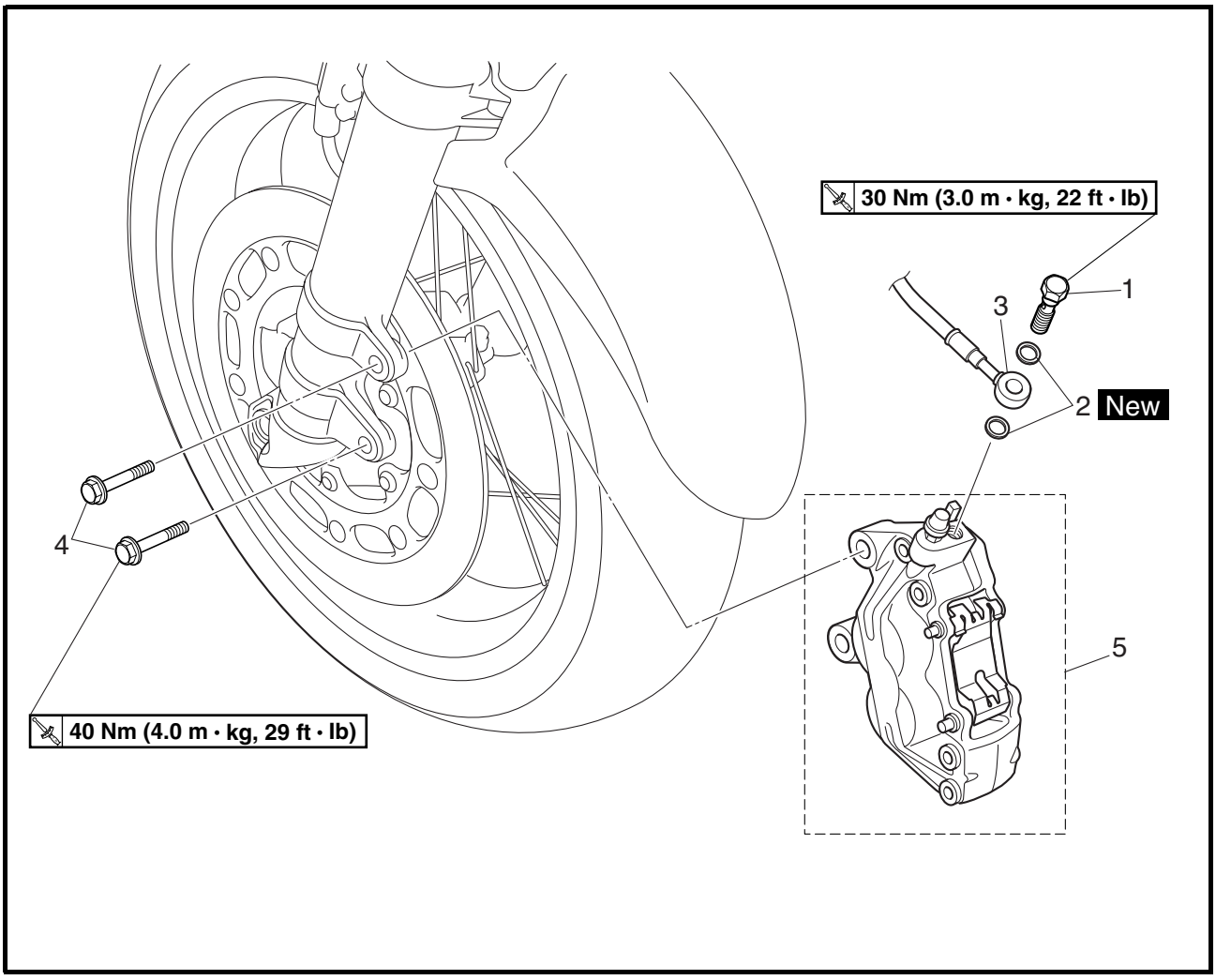

Order	Job/Part	Q'ty	Remarks
	Removing the front brake caliper		Remove the parts in the order listed.
	Brake fluid		Drain.
1	Union bolt	1	
2	Copper washer	2	
3	Brake hose	1	Disconnect.
4	Front brake caliper bolt	2	
5	Brake caliper	1	
			For installation, reverse the removal procedure.

Refer to "INSTALLING THE FRONT BRAKE CALIPER".

http://manuals.magnamaniac.com

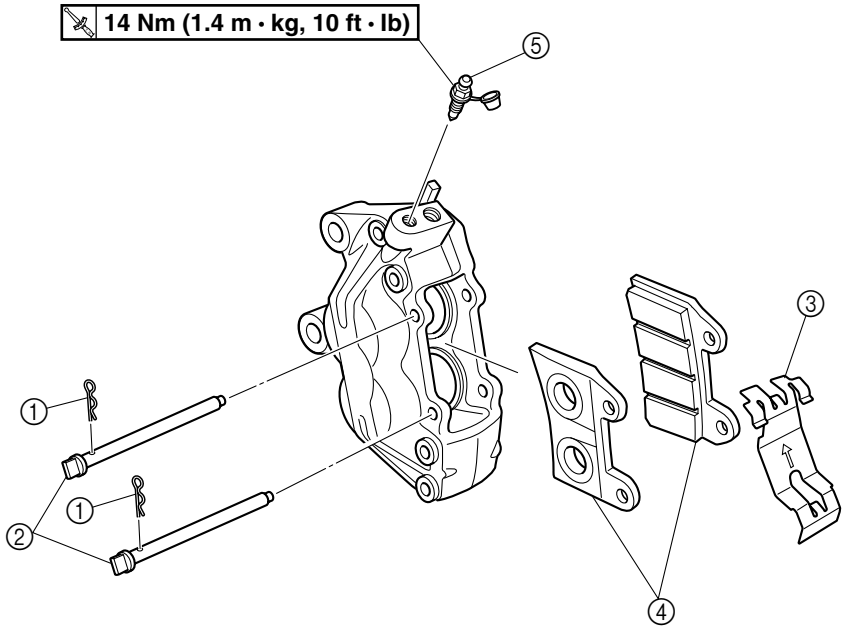

Order	Job/Part	Q'ty	Remarks
	Disassembling the front brake caliper		Remove the parts in the order listed.
①	Brake pad clip	2	
②	Brake pad pin	2	Refer to "INSTALLING THE FRONT BRAKE CALIPER".
③	Brake pad spring	1	
④	Brake pad	2	
⑤	Bleed screw	1	
			For assembly, reverse the disassembly procedure.

http://manuals.magnamaniac.com

EAS00616

REAR BRAKE CALIPER

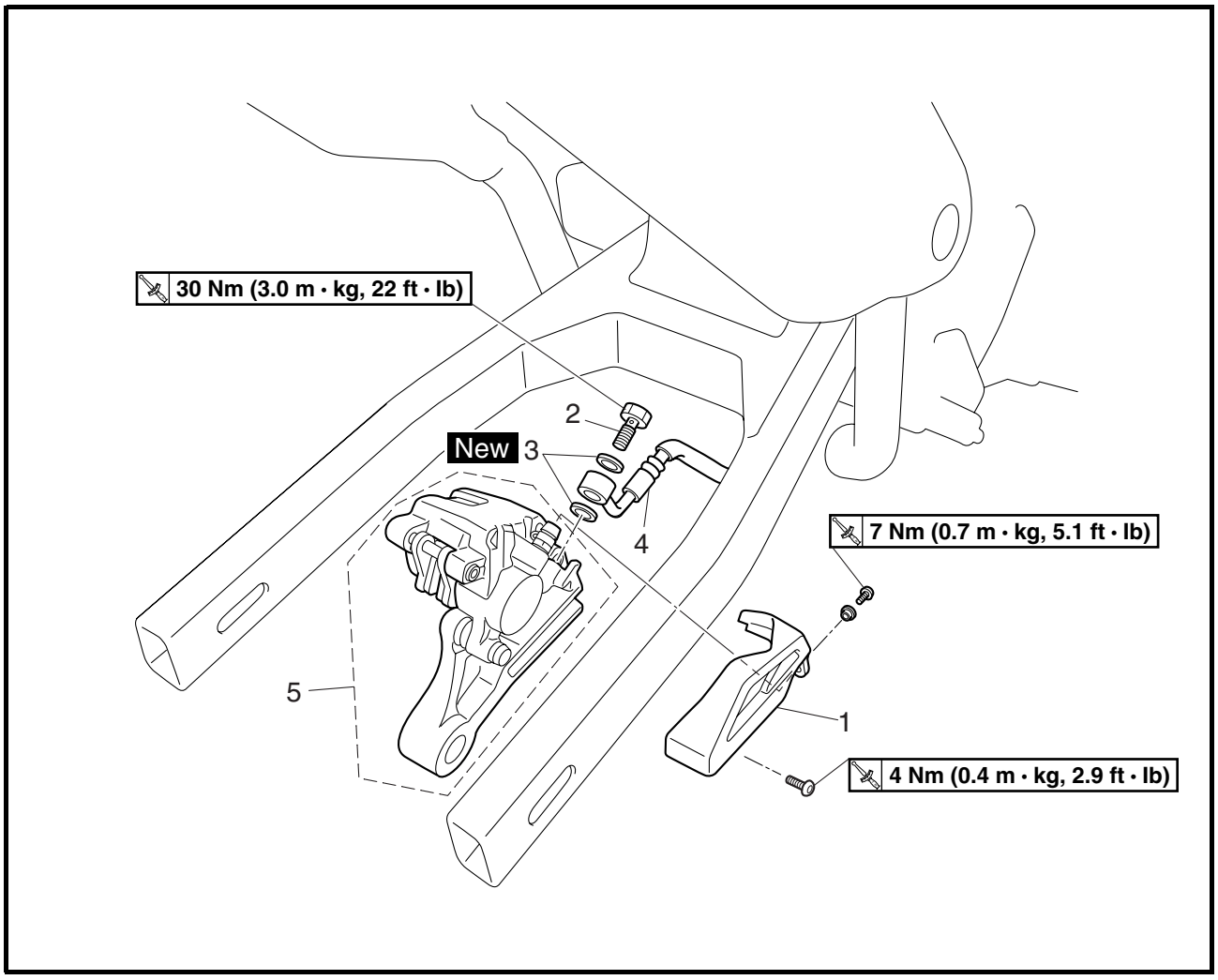

Order	Job/Part	Q'ty	Remarks
	Removing the rear brake caliper		Remove the parts in the order listed.
	Brake fluid		Drain.
	Rear wheel		Refer to "REAR WHEEL, BRAKE DISC, AND REAR WHEEL SPROCKET".
1	Brake caliper protector	1	
2	Union bolt	1	Disconnect. Refer to "INSTALLING THE REAR BRAKE CALIPER".
3	Copper washer	2	
4	Brake hose	1	
5	Brake caliper	1	
			For installation, reverse the removal procedure.

http://manuals.magnamaniac.com

EAS00617

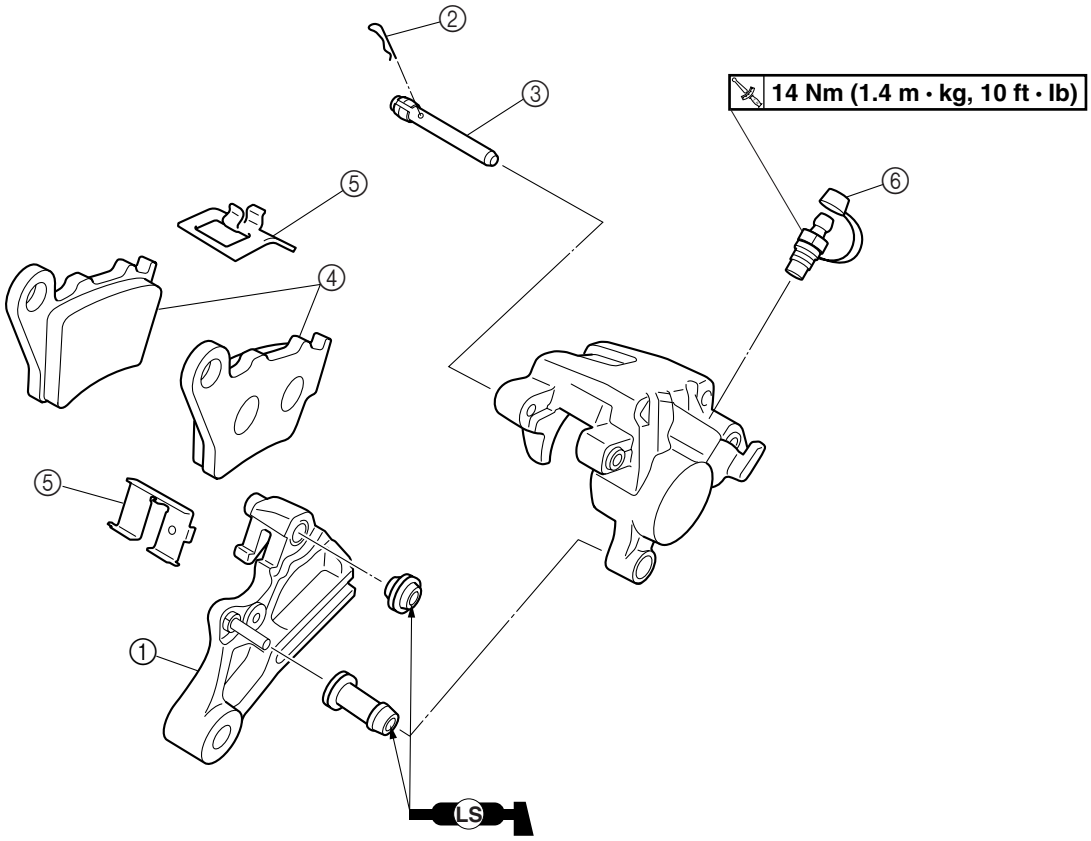

Order	Job/Part	Q'ty	Remarks
	Disassembling the rear brake caliper		Remove the parts in the order listed.
①	Brake caliper bracket	1	
②	Brake pad clip	1	
③	Brake pad pin	1	Refer to "INSTALLING THE REAR BRAKE CALIPER".
④	Brake pad	2	
⑤	Brake pad spring	2	
⑥	Bleed screw	1	
			For assembly, reverse the disassembly procedure.

http://manuals.magnamaniac.com

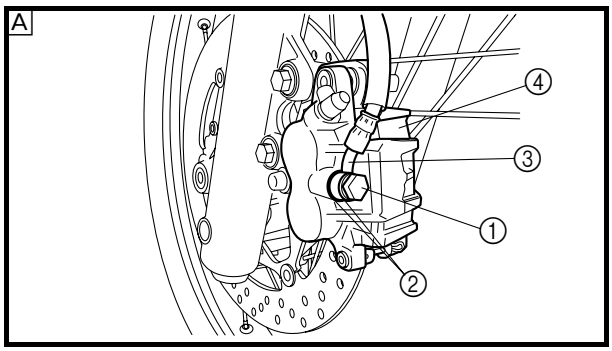

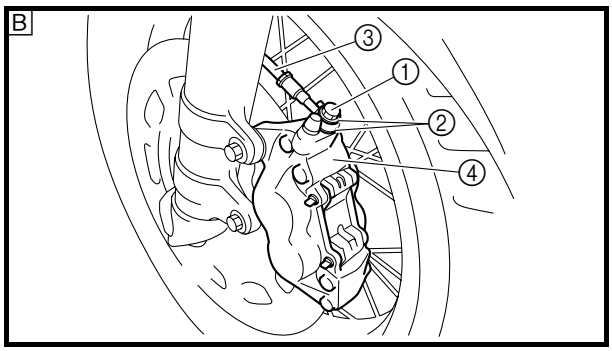

EAS00619
REMOVING THE FRONT BRAKE CALIPER

NOTE:
Before removing the brake caliper, drain the brake fluid from the entire brake system.

1. Remove:
   - union bolt ①
   - copper washers ②
   - brake hose ③
   - brake caliper ④

NOTE:
Put the end of the brake hose into a container and pump out the brake fluid carefully.

A XT660R
B XT660X

EAS00626
REMOVING THE REAR BRAKE CALIPER

NOTE:
Before removing the brake caliper, drain the brake fluid from the entire brake system.

1. Remove:
   - brake caliper protector

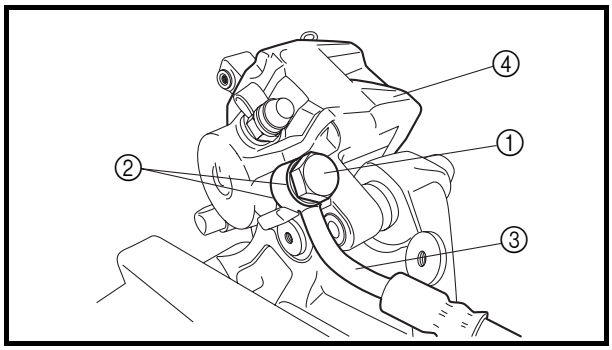

2. Remove:
   - union bolt ①
   - copper washers ②
   - brake hose ③
   - brake caliper ④
   - rear wheel
     Refer to “REAR WHEEL, BRAKE DISC, AND REAR WHEEL SPROCKET”.

NOTE:
Put the end of the brake hose into a container and pump out the brake fluid carefully.

http://manuals.magnamaniac.com

EAS00633
CHECKING THE FRONT AND REAR BRAKE CALIPERS

Recommended brake component replacement schedule	
Brake pads	**If necessary**
Brake hoses	**Every four years**
Brake fluid	**Every two years and whenever the brake is disassembled**

A
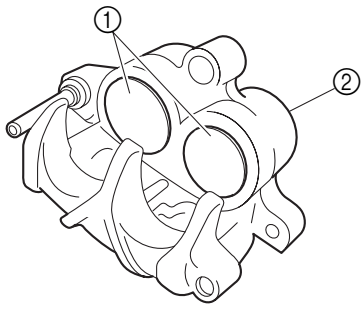

B
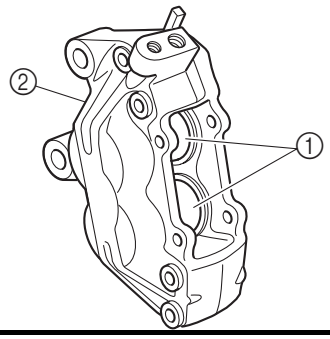

C
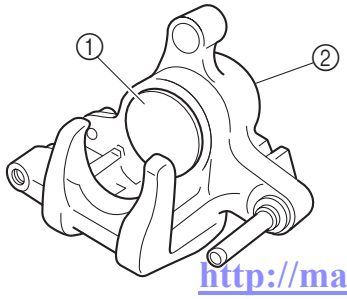

1. Check:
   - brake caliper pistons ①
     Rust/scratches/wear → Replace the brake caliper.
   - brake caliper body ②
     Cracks/damage → Replace the brake caliper.
   - brake caliper
     Brake fluid leakage → Replace the brake caliper.

A Front (XT660R)
B Front (XT660X)
C Rear (XT660R/XT660X)

2. Check:
   - brake caliper bracket
     Cracks/damage → Replace.

http://manuals.magnamaniac.com

EAS00634
INSTALLING THE FRONT BRAKE CALIPER

1. Install:
   - brake pad springs
   - brake pads
   - brake pad pin(s)
   - brake pad clip(s)

   Refer to “FRONT BRAKE PADS”.

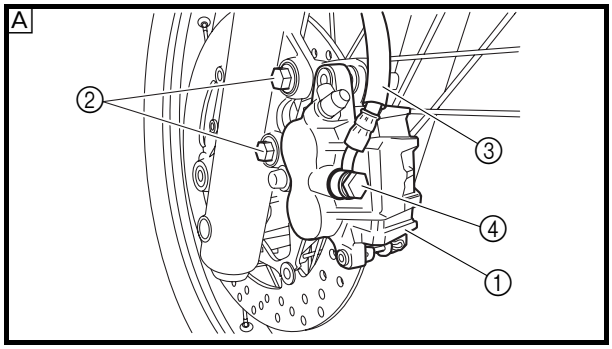

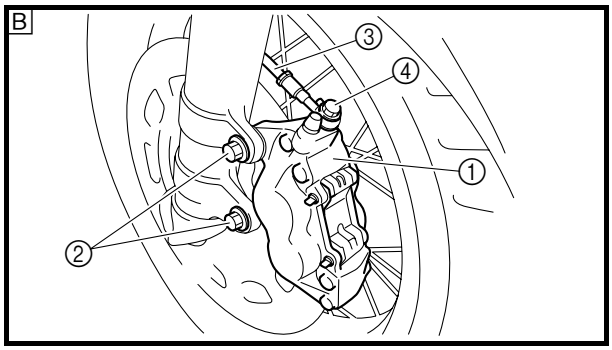

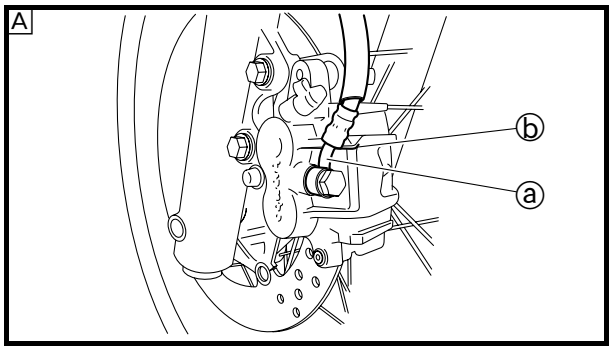

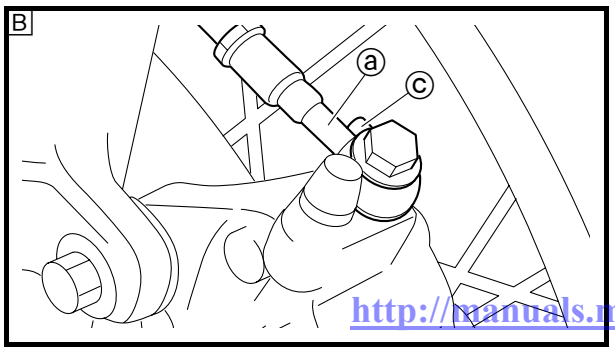

2. Install:
   - brake caliper ①
   - brake caliper bolts ②

     40 Nm (4.0 m · kg, 29 ft · lb)
   - copper washers New
   - brake hose ③
   - union bolt ④ **30 Nm (3.0 m · kg, 22 ft · lb)**

⚠ WARNING

Proper brake hose routing is essential to insure safe motorcycle operation. Refer to “CABLE ROUTING” in chapter 2.

CAUTION:

XT660R

When installing the brake hose onto the brake caliper ①, make sure the brake pipe ⓐ touches the brake caliper body ⓑ.

XT660X

When installing the brake hose onto the brake caliper ①, make sure the brake pipe ⓐ touches the projection ⓒ on the brake caliper.

Ⓐ XT660R
Ⓑ XT660X

http://manuals.magnamaniac.com

3. Fill:
   • brake master cylinder reservoir
   (with the specified amount of the recommended brake fluid)

Recommended brake fluid
DOT 4

⚠ WARNING

- **Use only the designated brake fluid. Other brake fluids may cause the piston seals to deteriorate, causing leakage and poor brake performance.**
- **Refill with the same type of brake fluid that is already in the system. Mixing brake fluids may result in a harmful chemical reaction, leading to poor brake performance.**
- **When refilling, be careful that water does not enter the brake master cylinder reservoir. Water will significantly lower the boiling point of the brake fluid and could cause vapor lock.**

CAUTION:

Brake fluid may damage painted surfaces and plastic parts. Therefore, always clean up any spilt brake fluid immediately.

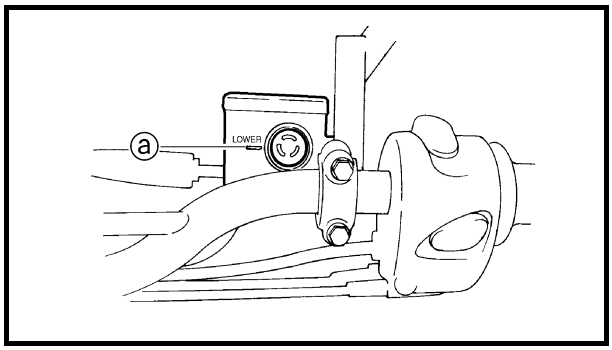

4. Bleed:
   • brake system
   Refer to "BLEEDING THE HYDRAULIC BRAKE SYSTEM" in chapter 3.
5. Check:
   • brake fluid level
   Below the minimum level mark ⓐ → Add the recommended brake fluid to the proper level.
   Refer to "CHECKING THE BRAKE FLUID LEVEL" in chapter 3.
6. Check:
   • brake lever operation
   Soft or spongy feeling → Bleed the brake system.
   Refer to "BLEEDING THE HYDRAULIC BRAKE SYSTEM" in chapter 3.

http://manuals.magnamaniac.com

EAS00642
INSTALLING THE REAR BRAKE CALIPER

1. Install:
   - brake caliper springs
   - brake pads
   - brake pad pin
   - brake pad clip

   Refer to “REAR BRAKE PADS”.

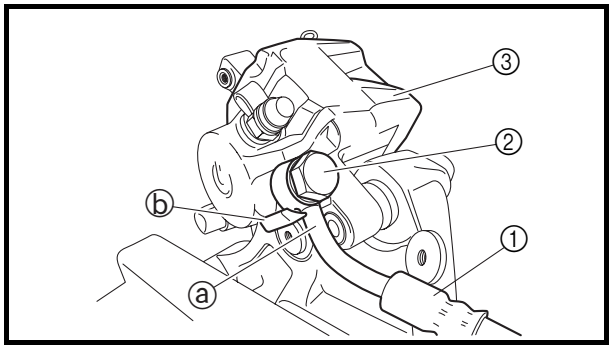

2. Install:
   - brake caliper
   - rear wheel

     Refer to “REAR WHEEL, BRAKE DISC, AND REAR WHEEL SPROCKET”.
   - copper washers New
   - brake hose ①
   - union bolt ② **30 Nm (3.0 m · kg, 22 ft · lb)**

⚠ WARNING

Proper brake hose routing is essential to insure safe motorcycle operation. Refer to “CABLE ROUTING” in chapter 2.

CAUTION:

When installing the brake hose onto the brake caliper ③, make sure the brake pipe ⓐ touches the projection ⓑ on the brake caliper.

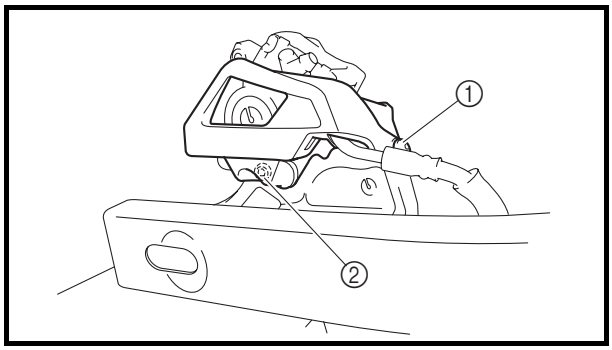

3. Install:
   - brake caliper protector
   - brake caliper protector bolt ① **7 Nm (0.7 m · kg, 5.1 ft · lb)**
   - brake caliper protector bolt ② **4 Nm (0.4 m · kg, 2.9 ft · lb)**

4. Fill:
   - brake fluid reservoir

     (with the specified amount of the recommended brake fluid)

Recommended brake fluid
DOT 4

http://manuals.magnamaniac.com

⚠ WARNING

- **Use only the designated brake fluid. Other brake fluids may cause the piston seals to deteriorate, causing leakage and poor brake performance.**
- **Refill with the same type of brake fluid that is already in the system. Mixing brake fluids may result in a harmful chemical reaction, leading to poor brake performance.**
- **When refilling, be careful that water does not enter the brake fluid reservoir. Water will significantly lower the boiling point of the brake fluid and could cause vapor lock.**

CAUTION:

Brake fluid may damage painted surfaces and plastic parts. Therefore, always clean up any spilt brake fluid immediately.

5. Bleed:
   - brake system
     Refer to "BLEEDING THE HYDRAULIC BRAKE SYSTEM" in chapter 3.

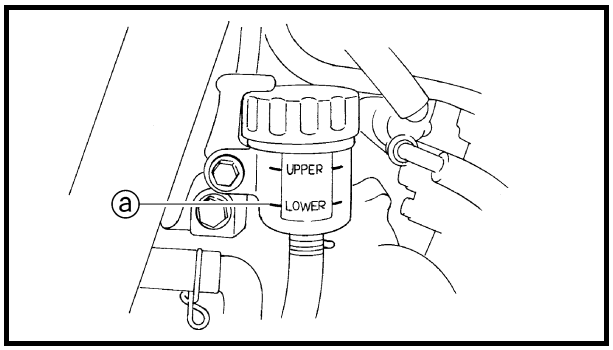

6. Check:
   - brake fluid level
     Below the minimum level mark ⓐ → Add the recommended brake fluid to the proper level.
     Refer to "CHECKING THE BRAKE FLUID LEVEL" in chapter 3.
7. Check:
   - brake pedal operation
     Soft or spongy feeling → Bleed the brake system.
     Refer to "BLEEDING THE HYDRAULIC BRAKE SYSTEM" in chapter 3.

http://manuals.magnamaniac.com

EAS00646
FRONT FORK

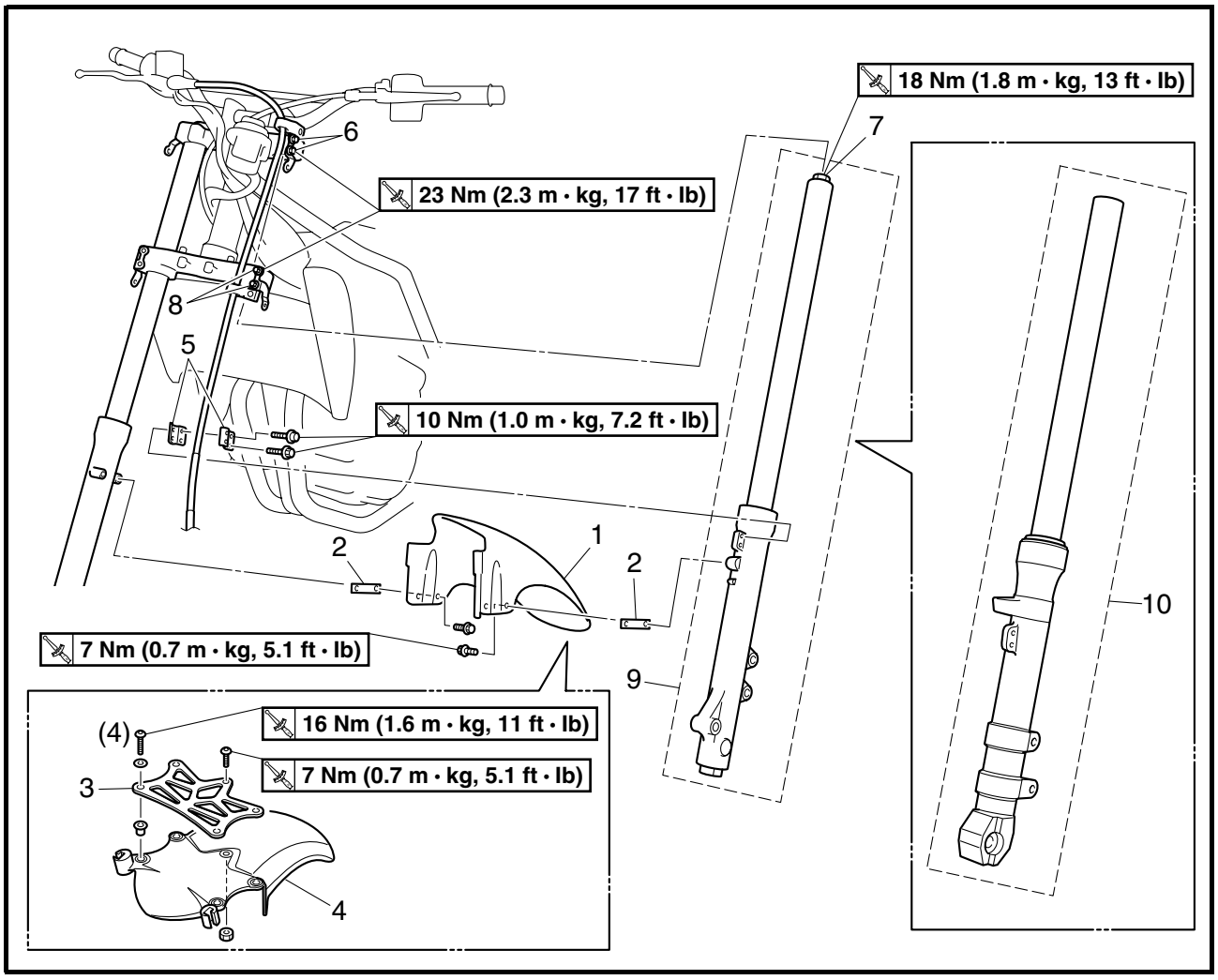

Order	Job/Part	Q'ty	Remarks
	Removing the front fork legs		Remove the parts in the order listed. The following procedure applies to both of the front fork legs.
	Front fender		Refer to "COWLING AND COVER" in chapter 3.
	Front fork protector		
	Front cowling assembly		
	Front wheel		Refer to "FRONT WHEEL AND BRAKE DISC".
1	Front mud guard	1	XT660R
2	Front mud guard stay	2	XT660R
3	Stabilizer	1	XT660X
4	Front mud guard	1	XT660X
5	Brake hose holder	2	Refer to "INSTALLING THE FRONT FORK LEGS".

http://manuals.magnamaniac.com

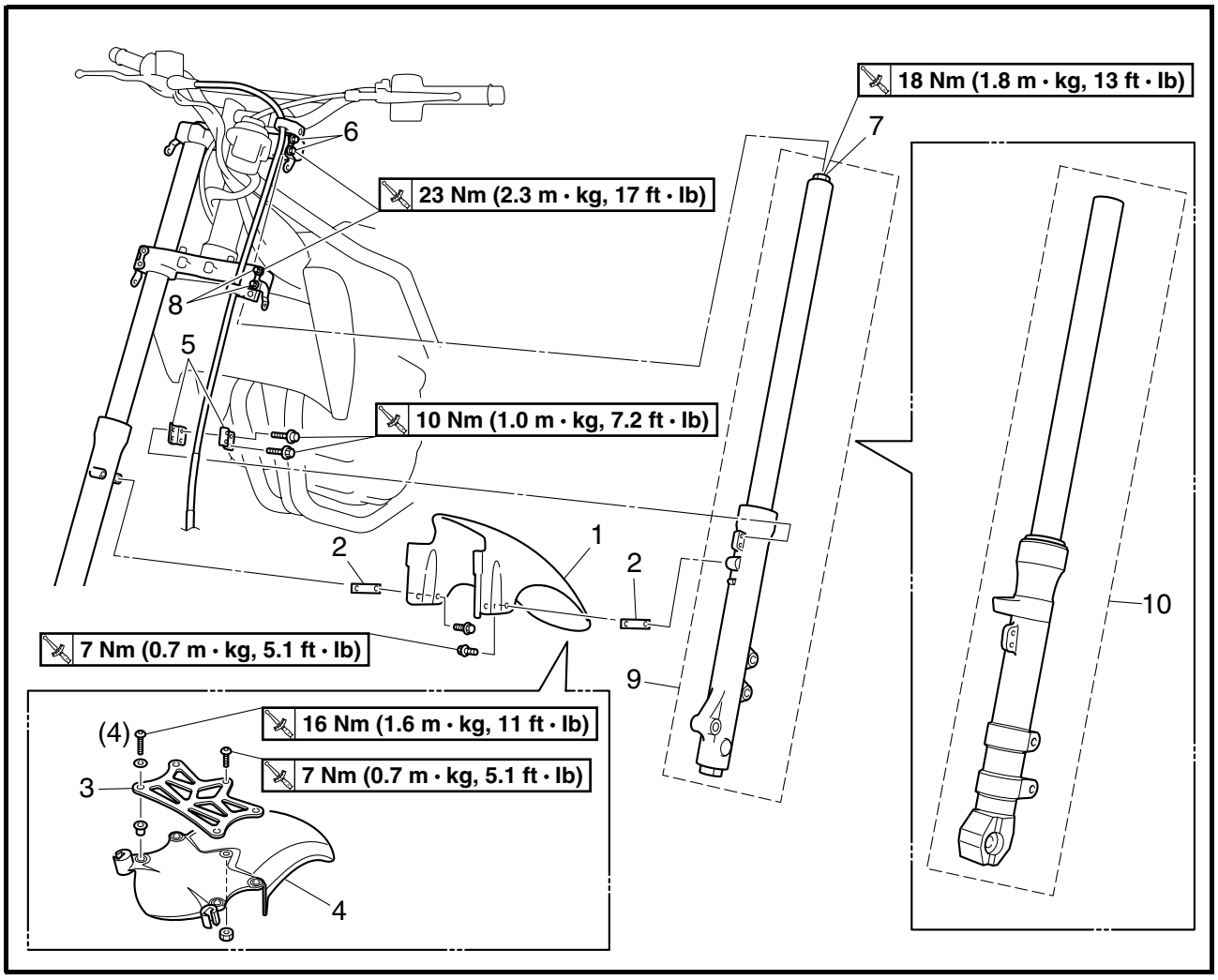

Order	Job/Part	Q'ty	Remarks
6	Upper bracket pinch bolt	2	Loosen. ┐ Refer to "REMOVING
7	Cap bolt	1	Loosen. ├ THE FRONT FORK
8	Lower bracket pinch bolt	2	Loosen. ┘ LEGS" and "INSTALLING THE FRONT FORK LEGS".
9	Front fork leg	1	XT660R
10	Front fork leg	1	XT660X
			For installation, reverse the removal procedure.

http://manuals.magnamaniac.com

EAS00648

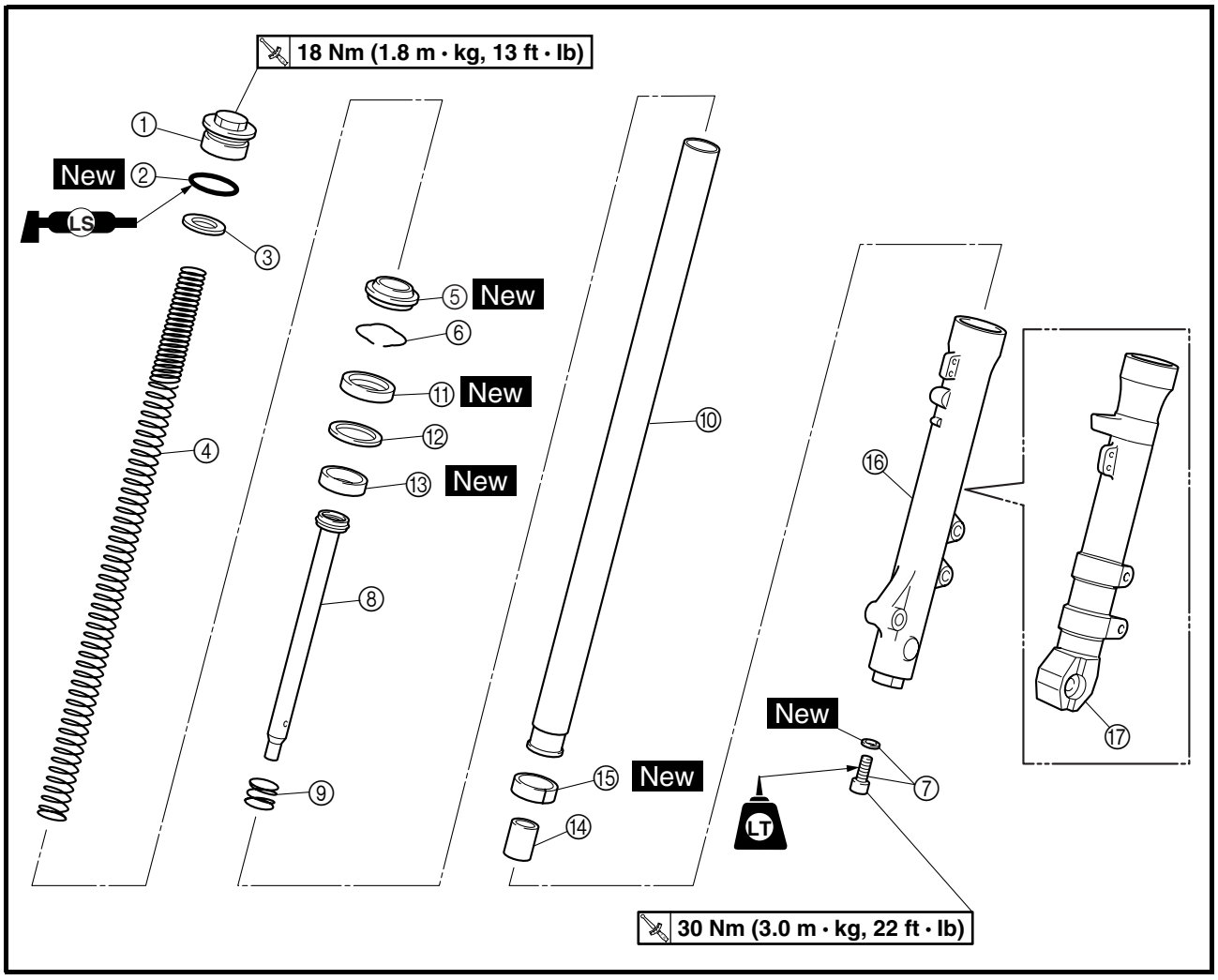

Order	Job/Part	Q'ty	Remarks
	Disassembling the front fork legs		Remove the parts in the order listed. **NOTE:** The following the procedure applies to both of the front fork legs.
①	Cap bolt	1	
②	O-ring	1	
③	Spring seat	1	
④	Fork spring	1	
⑤	Dust seal	1	Refer to "DISASSEMBLING THE FRONT FORK LEGS" and "ASSEMBLING THE FRONT FORK LEGS".
⑥	Oil seal clip	1	
⑦	Damper rod bolt/copper washer	1/1	
⑧	Damper rod	1	
⑨	Rebound spring	1	
⑩	Inner tube	1	

http://manuals.magnamaniac.com

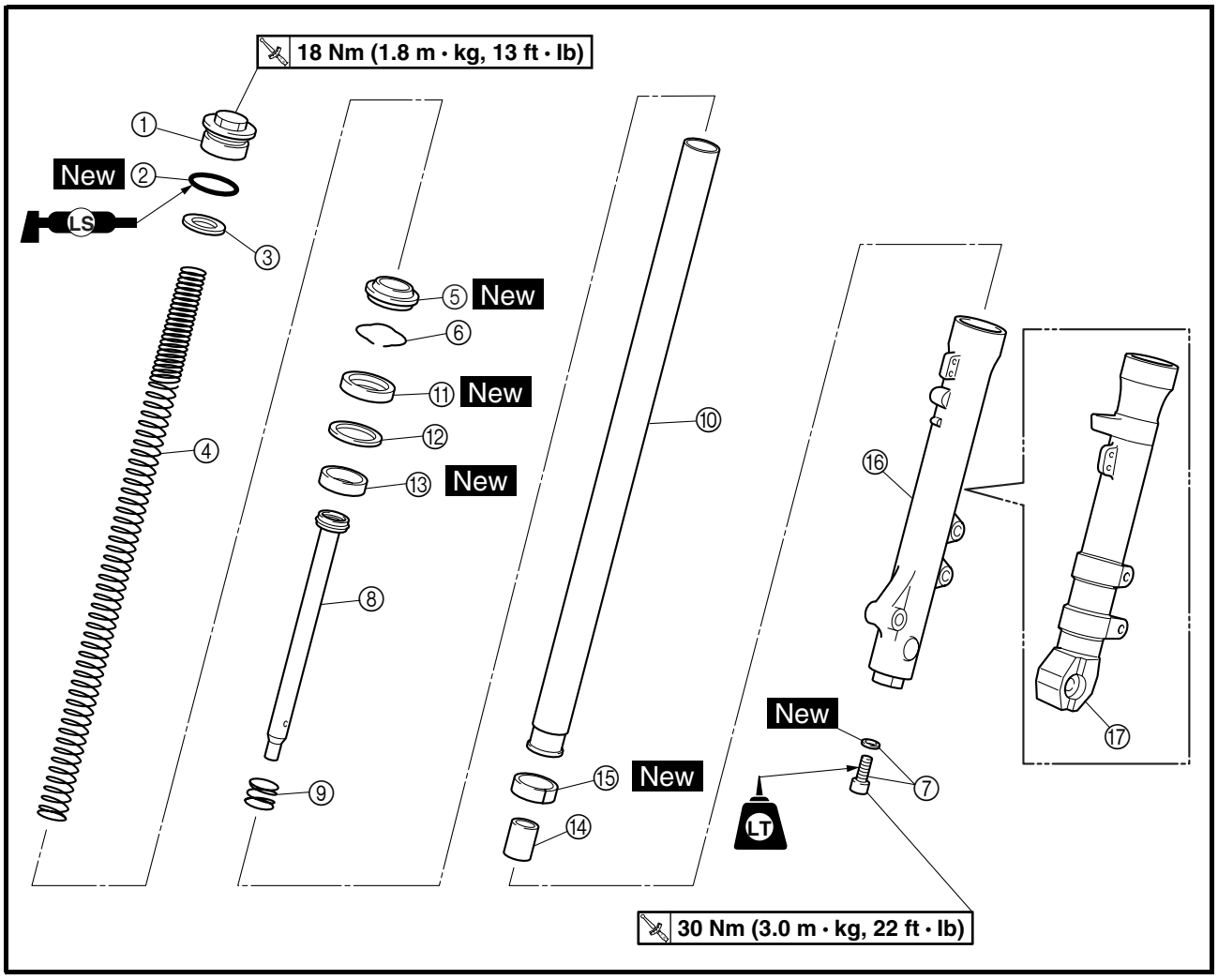

Order	Job/Part	Q'ty	Remarks
⑪	Oil seal	1	Refer to "ASSEMBLING THE FRONT FORK LEGS".
⑫	Washer	1	
⑬	Outer tube bushing	1	
⑭	Oil flow stopper	1	
⑮	Inner tube bushing	1	
⑯	Outer tube	1	XT660R
⑰	Outer tube	1	XT660X
			For assembly, reverse the disassembly procedure.

http://manuals.magnamaniac.com

EAS00649
REMOVING THE FRONT FORK LEGS

The following procedure applies to both of the front fork legs.

1. Stand the motorcycle on a level surface.

⚠ WARNING

Securely support the motorcycle so that there is no danger of it falling over.

NOTE:

Place the motorcycle on a suitable stand so that the front wheel is elevated.

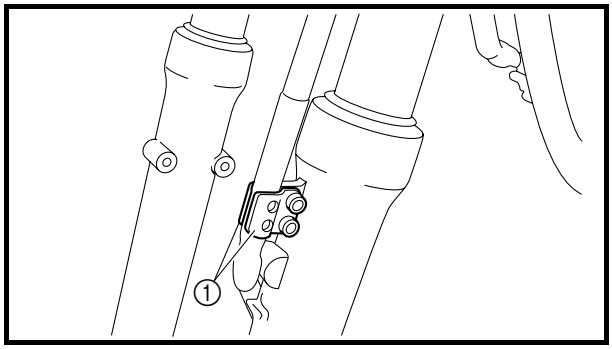

2. Remove:
   - brake hose holders ①

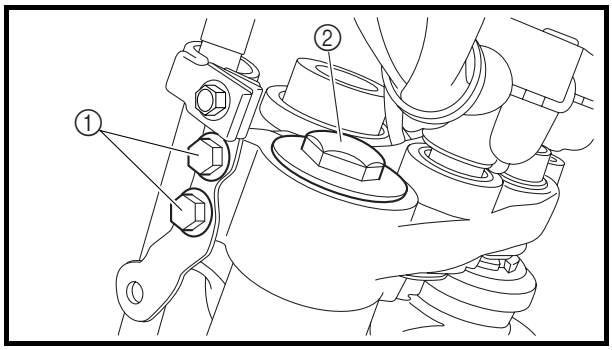

3. Loosen:
   - upper bracket pinch bolts ①
   - cap bolt ②
   - lower bracket pinch bolts ③

⚠ WARNING

Before loosening the upper and lower bracket pinch bolts, support the front fork leg.

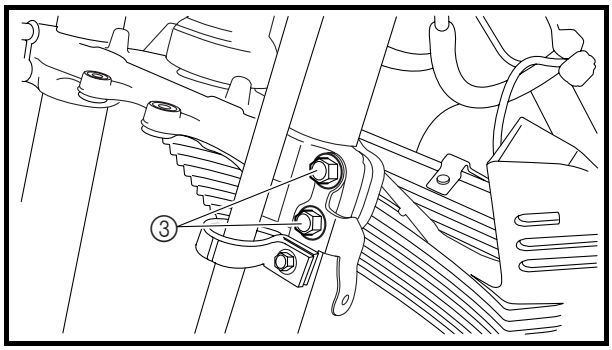

4. Remove:
   - front fork leg

EAS00652
DISASSEMBLING THE FRONT FORK LEGS

The following procedure applies to both of the front fork legs.

1. Remove:
   - cap bolt
   - spring seat
   - fork spring

http://manuals.magnamaniac.com

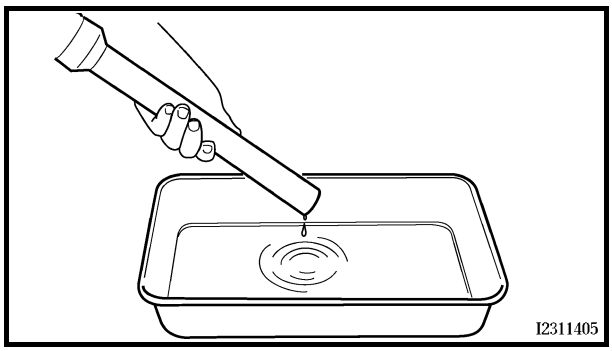

2. Drain:
   • fork oil

NOTE:
Stroke the outer tube several times while draining the fork oil.

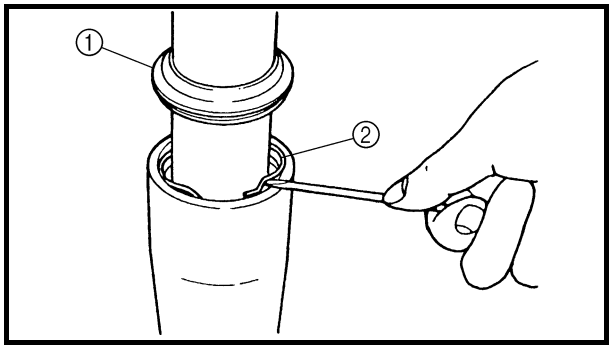

3. Remove:
   • dust seal ①
   • oil seal clip ②
   (with a flat-head screwdriver)

CAUTION:
Do not scratch the inner tube.

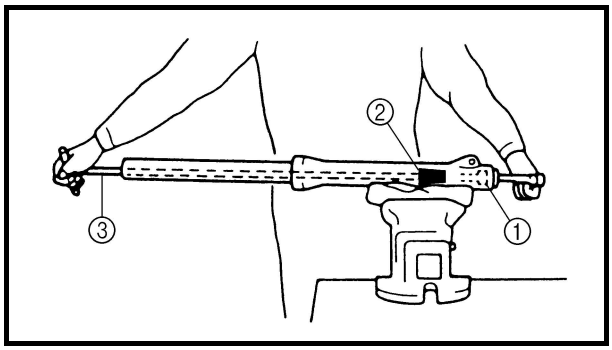

4. Remove:
   • damper rod bolt ①
   • copper washer

NOTE:
While holding the damper rod assembly with the damper rod holder ② and T-handle ③, loosen the damper rod bolt ①.

Damper rod holder
90890-01460
T-handle
90890-01326

5. Remove:
   • inner tube

▼▼▼▼▼▼▼▼▼▼▼▼▼▼▼▼▼▼▼▼▼▼▼▼▼▼▼▼▼▼▼▼▼▼

a. Hold the front fork leg horizontally.
b. Securely clamp the brake caliper bracket in a vise with soft jaws.
c. Separate the inner tube from the outer tube by pulling the inner tube forcefully but carefully.

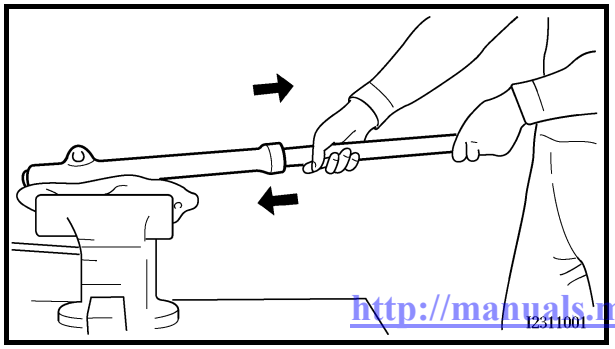

CAUTION:
- **Excessive force will damage the oil seal and the inner tube bushing. A damaged oil seal or inner tube bushing must be replaced.**

http://manuals.magnamaniac.com

• Avoid bottoming the inner tube into the outer tube during the above procedure, as the oil flow stopper will be damaged.

▲▲▲▲▲▲▲▲▲▲▲▲▲▲▲▲▲▲▲▲▲▲▲▲▲▲▲▲▲▲

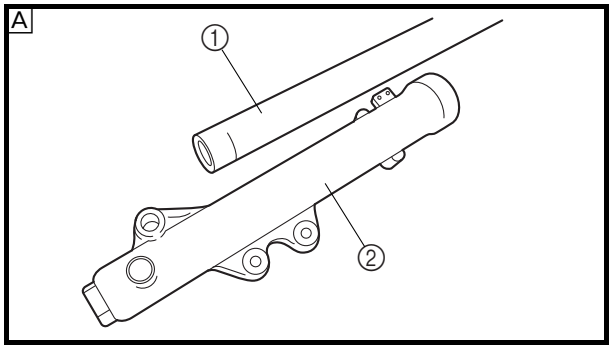

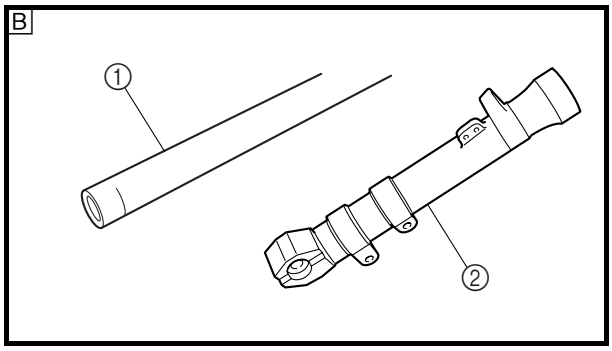

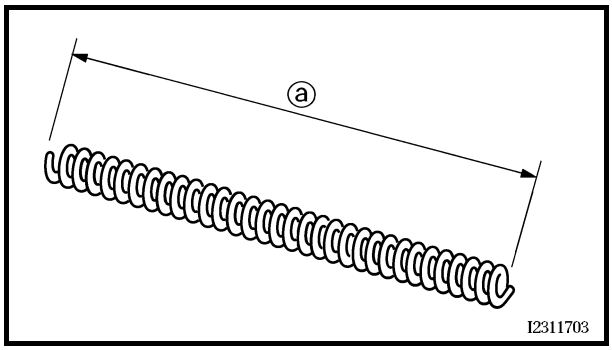

EAS00657
CHECKING THE FRONT FORK LEGS

The following procedure applies to both of the front fork legs.

1. Check:
   - inner tube ①
   - outer tube ②

   Bends/damage/scratches → Replace.

⚠ WARNING

Do not attempt to straighten a bent inner tube as this may dangerously weaken it.

A XT660R
B XT660X

2. Measure:
   - spring free length ⓐ

   Out of specification → Replace.

Spring free length
XT660R
633.0 mm (24.92 in)
<Limit>: 620 mm (24.41 in)
XT660X
593.0 mm (23.35 in)
<Limit>: 581 mm (22.87 in)

http://manuals.magnamaniac.com

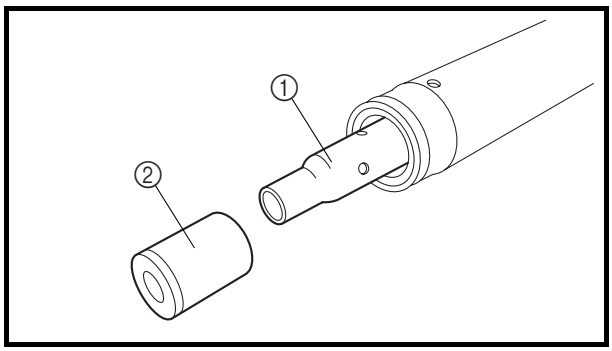

3. Check:
   - damper rod ①
     Damage/wear → Replace.
     Obstruction → Blow out all of the oil passages with compressed air.
   - oil flow stopper ②
     Damage → Replace.

CAUTION:

- **The front fork leg has a built-in damper adjusting rod and a very sophisticated internal construction, which are particularly sensitive to foreign material.**
- **When disassembling and assembling the front fork leg, do not allow any foreign material to enter the front fork.**

EAS00659

ASSEMBLING THE FRONT FORK LEGS

The following procedure applies to both of the front fork legs.

⚠ WARNING

- **Make sure the oil levels in both front fork legs are equal.**
- **Uneven oil levels can result in poor handling and a loss of stability.**

NOTE:

- When assembling the front fork leg, be sure to replace the following parts:
  - inner tube bushing
  - outer tube bushing
  - oil seal
  - dust seal
- Before assembling the front fork leg, make sure all of the components are clean.

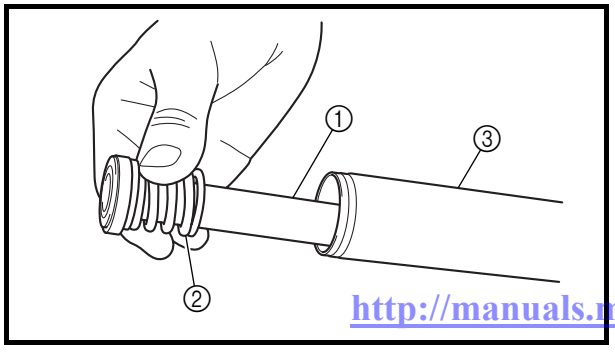

1. Install:
   - damper rod ①
   - rebound spring ②

CAUTION:

Allow the damper rod assembly to slide slowly down the inner tube ③ until it protrudes from the bottom of the inner tube. Be careful not to damage the inner tube.

http://manuals.magnamanac.com

2. Lubricate:
   • inner tube's outer surface

	Recommended lubricant **Fork oil 10 W or equivalent**

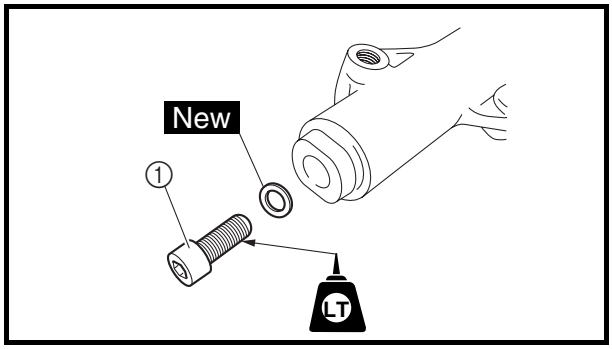

3. Tighten:
   • damper rod bolt ①

	Damper rod bolt **30 Nm (3.0 m · kg, 22 ft · lb)** **LOCTITE®**

NOTE:
While holding the damper rod with the damper rod holder ② and T-handle ③, tighten the damper rod bolt.

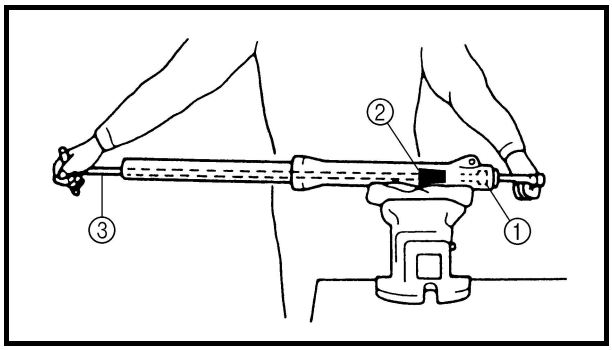

	Damper rod holder **90890-01460** **T-handle** **90890-01326**

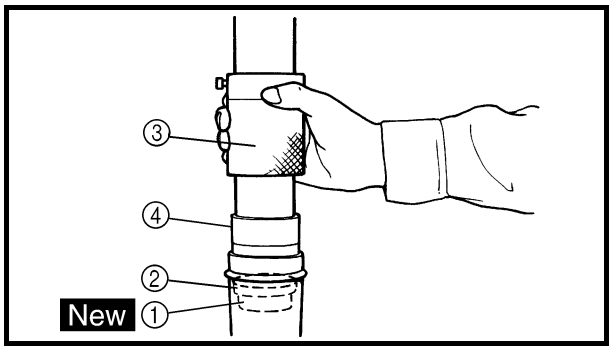

4. Install:
   • outer tube bushing ① New
     (with the fork seal driver weight ③ and fork seal driver attachment ④)
   • washer ②

	Fork seal driver weight **90890-01367** **Fork seal driver attachment (ø43)** **90890-01374**

http://manuals.magnamaniac.com

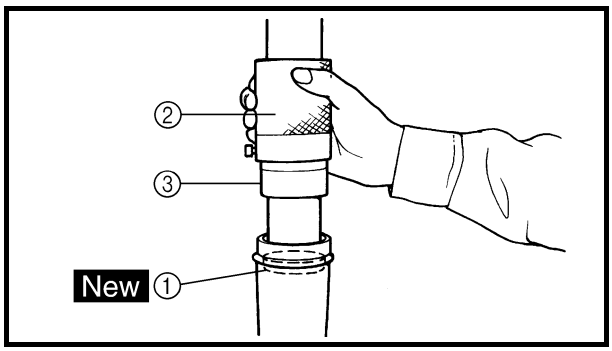

5. Install:
   • oil seal ① New
   (with the fork seal driver weight ② and fork seal driver attachment ③)

CAUTION:

Make sure the numbered side of the oil seal faces up.

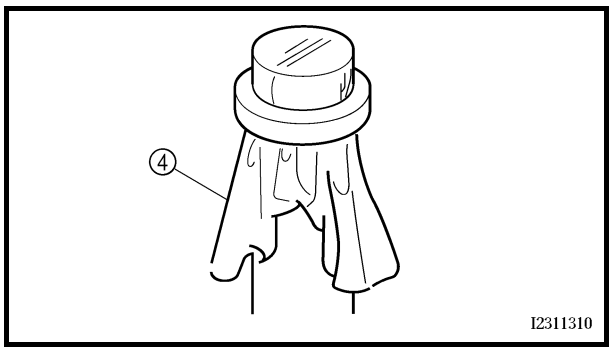

NOTE:

- Before installing the oil seal, lubricate its lips with lithium-soap-based grease.
- Lubricate the outer surface of the inner tube with fork oil.
- Before installing the oil seal, cover the top of the front fork leg with a plastic bag ④ to protect the oil seal during installation.

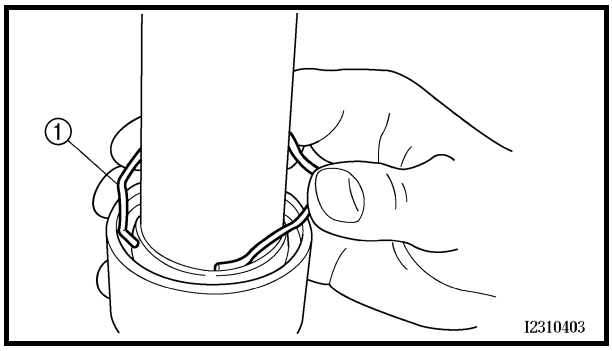

6. Install:
   • oil seal clip ①

NOTE:

Adjust the oil seal clip so that it fits into the outer tube's groove.

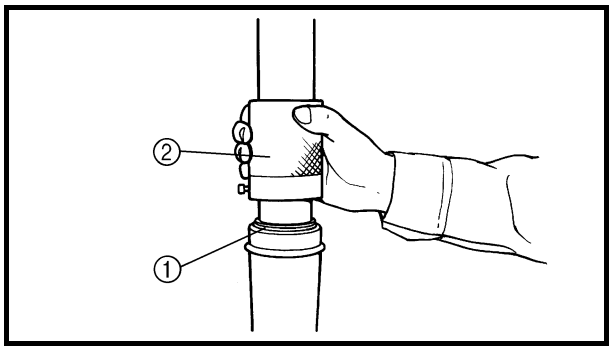

7. Install:
   • dust seal ①
   (with the fork seal driver weight ②)

	Fork seal driver weight **90890-01367**

http://manuals.magnamaniac.com

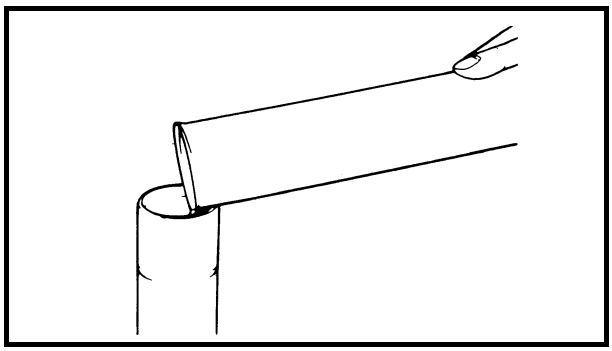

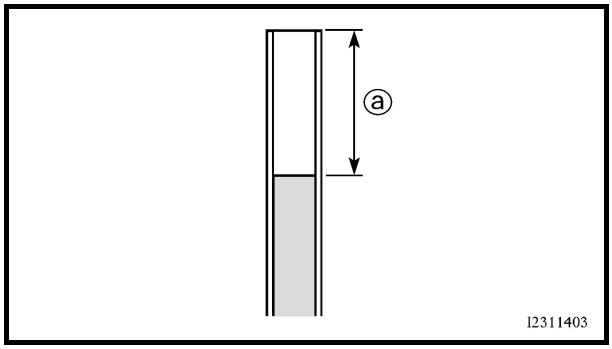

8. Fill:
   - front fork leg
     (with the specified amount of the recommended fork oil)

Quantity (each front fork leg)
XT660R
640.0 cm³
(22.53 Imp oz, 21.64 US oz)
XT660X
600.0 cm³
(21.12 Imp oz, 20.29 US oz)
Recommended oil
Fork oil 10 W or equivalent

9. Measure:
   - front fork leg oil level ⓐ
     Out of specification → Correct.

Front fork leg oil level (from the top of the inner tube, with the inner tube fully compressed and without the fork spring)
125.0 mm (4.92 in)

NOTE:
- While filling the front fork leg, keep it upright.
- After filling, slowly pump the front fork leg up and down to distribute the fork oil.

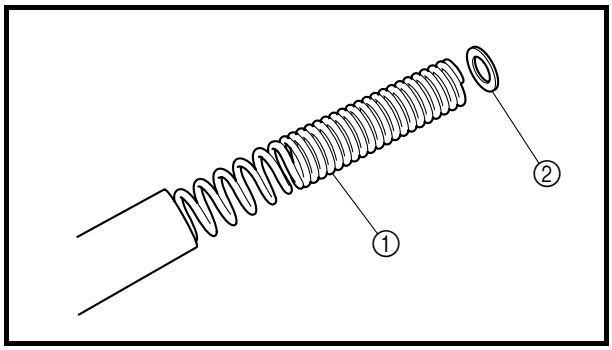

10. Install:
    - spring ①
    - spring seat ②
    - O-ring New
    - cap bolt

NOTE:
- Install the spring with the smaller pitch facing up.
- Before installing the cap bolt, lubricate its O-ring with lithium-soap-based grease.
- Temporarily tighten the cap bolt.

http://manuals.magnamaniac.com

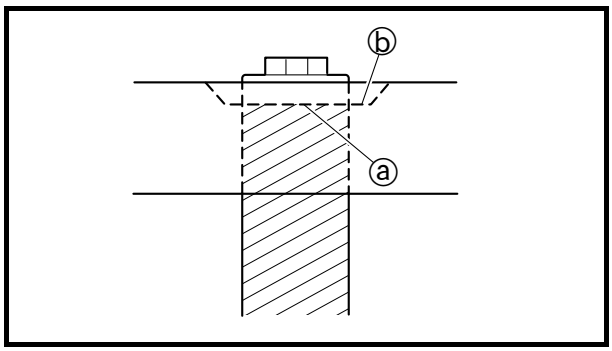

EAS00662
INSTALLING THE FRONT FORK LEGS

The following procedure applies to both of the front fork legs.

1. Install:
   - front fork leg
     Temporarily tighten the lower bracket pinch bolts.

NOTE:

To install the front fork leg, align the inner tube ⓐ with the lower edge ⓑ of the bevel on the upper bracket as shown.

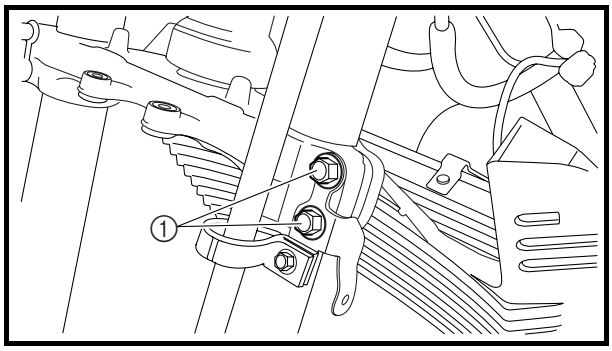

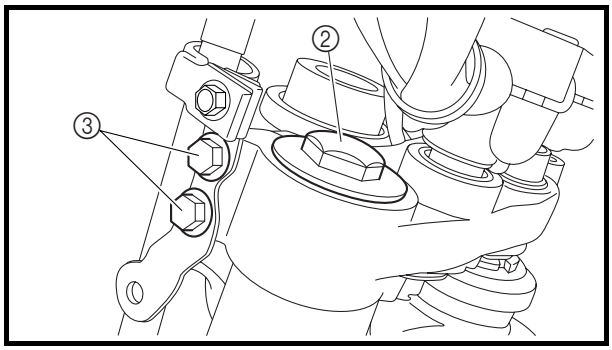

2. Tighten:
   - lower bracket pinch bolts ①
     23 Nm (2.3 m · kg, 17 ft · lb)
   - cap bolt ②
     18 Nm (1.8 m · kg, 13 ft · lb)
   - upper bracket pinch bolts ③
     23 Nm (23 m · kg, 17 ft · lb)

⚠ WARNING

Make sure the brake hose is routed properly.

3. Install:
   - brake hose holders
     10 Nm (1.0 m · kg, 7.2 ft · lb)
   - front mud guard

⚠ WARNING

Proper brake hose routing is essential to insure safe motorcycle operation. Refer to "CABLE ROUTING" in chapter 2.

http://manuals.magnamaniac.com

EAS00664
HANDLEBAR

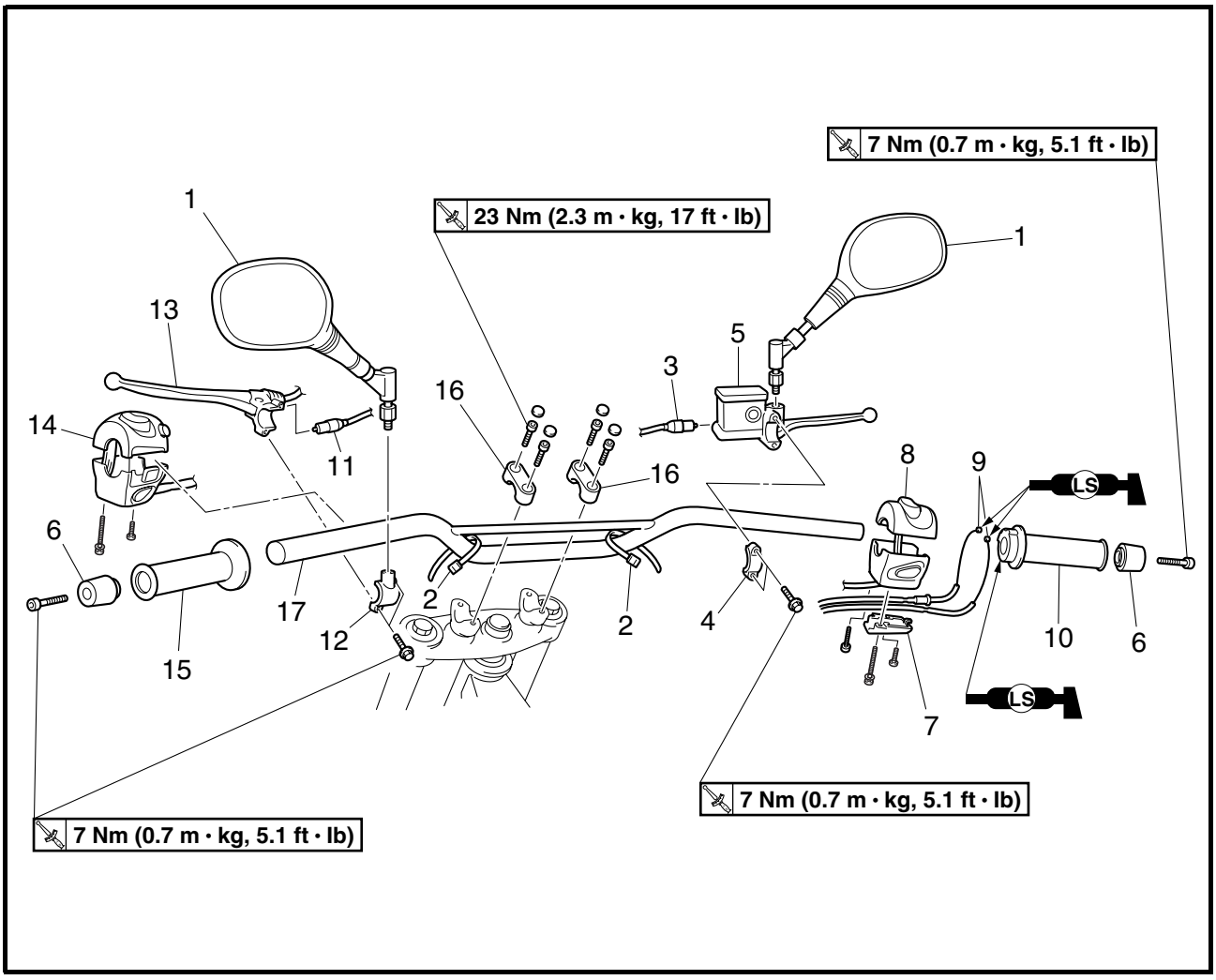

Order	Job/Part	Q'ty	Remarks
	Removing the handlebar		Remove the parts in the order listed.
1	Rearview mirror (left and right)	2	
2	Plastic band	2	
3	Front brake light switch	1	Disconnect. Refer to "REMOVING THE HANDLEBAR".
4	Brake master cylinder holder	1	Refer to "INSTALLING THE HANDLEBAR".
5	Brake master cylinder	1	
6	Grip end	2	
7	Throttle cable holder	1	
8	Right handlebar switch	1	
9	Throttle cable	2	
10	Throttle grip	1	Disconnect.
11	Clutch switch	1	
12	Clutch lever holder	1	

http://manuals.magnamaniac.com

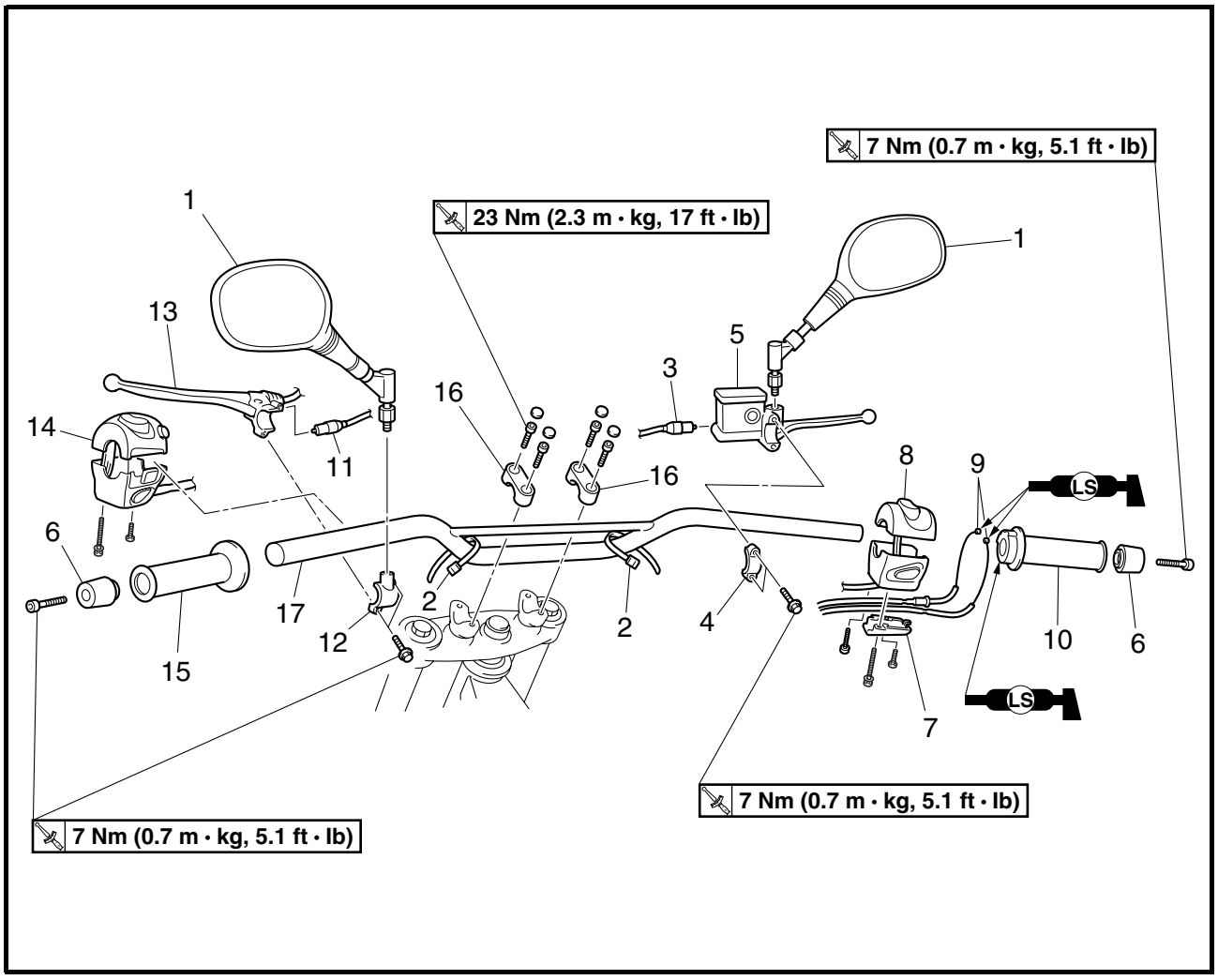

Order	Job/Part	Q'ty	Remarks
13	Clutch lever	1	Refer to "INSTALLING THE HANDLEBAR".
14	Left handlebar switch	1	
15	Handlebar grip	1	Refer to "REMOVING THE HANDLEBAR" and "INSTALLING THE HANDLEBAR".
16	Upper handlebar holder	2	Refer to "INSTALLING THE HANDLEBAR".
17	Handlebar	1	
			For installation, reverse the removal procedure.

http://manuals.magnamaniac.com

EAS00666
REMOVING THE HANDLEBAR

1. Stand the motorcycle on a level surface.

⚠ WARNING

Securely support the motorcycle so that there is no danger of it falling over.

2. Remove:
   - front brake light switch ①
   - clutch switch

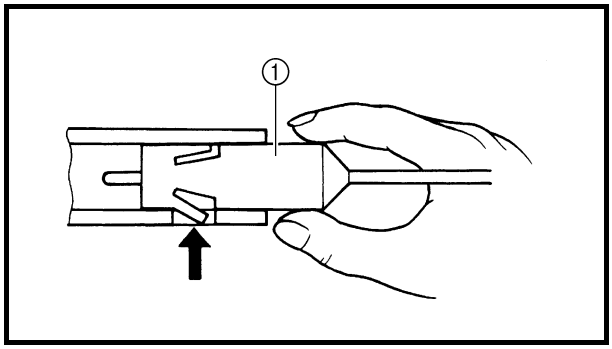

NOTE:

- Push the fastener to remove the front brake light switch from the brake master cylinder.
- Push the fastener to remove the clutch switch from the clutch lever.

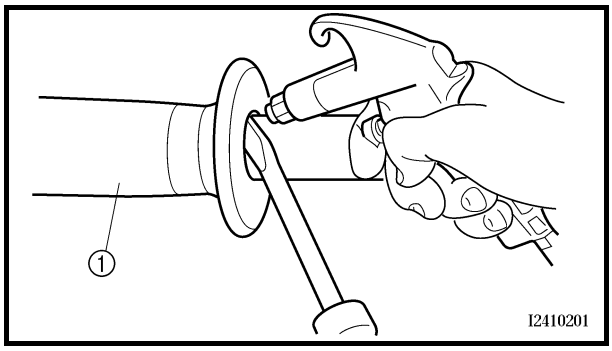

3. Remove:
   - handlebar grip ①

NOTE:

Blow compressed air between the handlebar and the handlebar grip, and gradually push the grip off the handlebar.

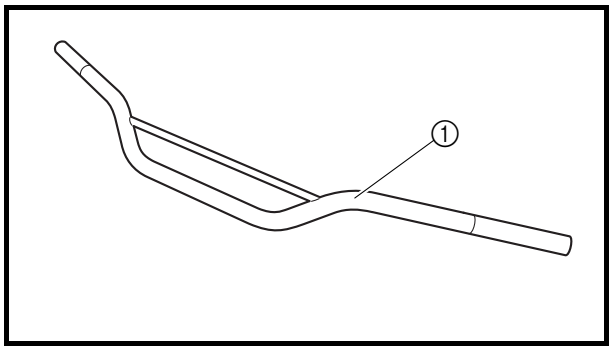

EAS00668
CHECKING THE HANDLEBAR

1. Check:
   - handlebar ①
     Bends/cracks/damage → Replace.

⚠ WARNING

Do not attempt to straighten a bent handlebar as this may dangerously weaken it.

EAS00671
INSTALLING THE HANDLEBAR

1. Stand the motorcycle on a level surface.

⚠ WARNING

Securely support the motorcycle so that there is no danger of it falling over.

http://manuals.magnamaniac.com

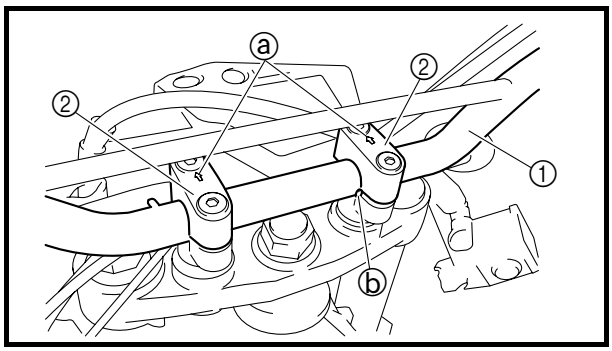

2. Install:
   - handlebar ①
   - upper handlebar holders ②

     23 Nm (2.3 m · kg, 17 ft · lb)
   - handlebar protector (XT660X)
   - handlebar protector cover (XT660X)

CAUTION:

- **First, tighten the bolts on the front side of the upper handlebar holder, then the bolts on the rear side.**
- **Turn the handlebar all the way to the left and right. If there is any contact with the fuel tank, adjust the handlebar position.**

NOTE:

- The upper handlebar holders should be installed with the arrow marks ⓐ facing forward.
- Align the match mark ⓑ on the handlebar with the upper surface of the lower handlebar holders.

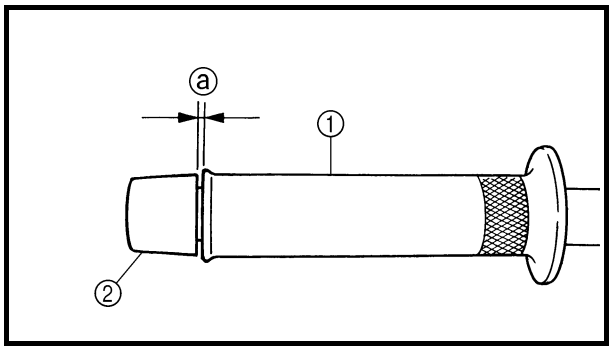

3. Install:
   - handlebar grip ①
   - grip end ②

     7 Nm (0.7 m · kg, 5.1 ft · lb)

a. Apply a thin coat of rubber adhesive onto the left end of the handlebar.
b. Slide the handlebar grip over the left end of the handlebar.
c. Wipe off any excess rubber adhesive with a clean rag.

⚠ WARNING

Do not touch the handlebar grip until the rubber adhesive has fully dried.

NOTE:

There should be 1 ~ 3 mm (0.04 ~ 0.12 in) of clearance ⓐ between the handlebar grip and the grip end.

http://manuals.magnamaniac.com

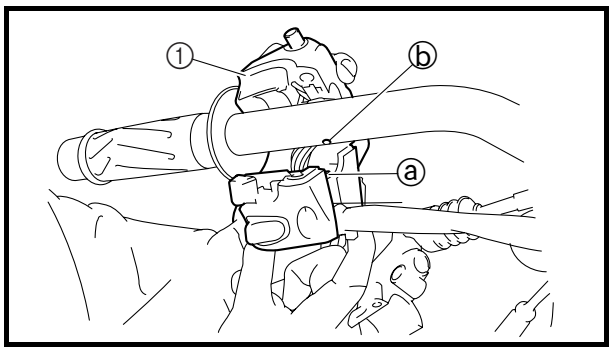

4. Install:
   - left handlebar switch ①

NOTE:
Align the projection ⓐ on the left handlebar switch with the hole ⓑ in the handlebar.

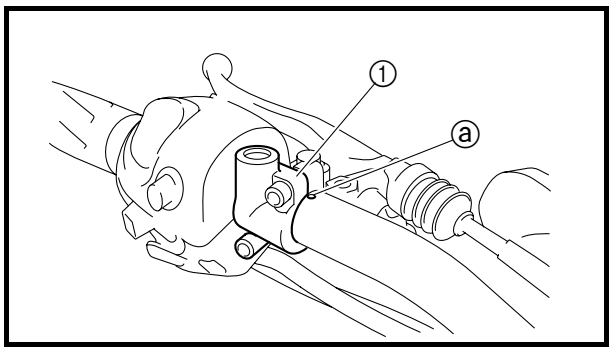

5. Install:
   - clutch lever
   - clutch lever holder ①

7 Nm (0.7 m · kg, 5.1 ft · lb)

NOTE:
Align the mating surfaces of the clutch lever holder with the punch mark ⓐ on the handlebar.

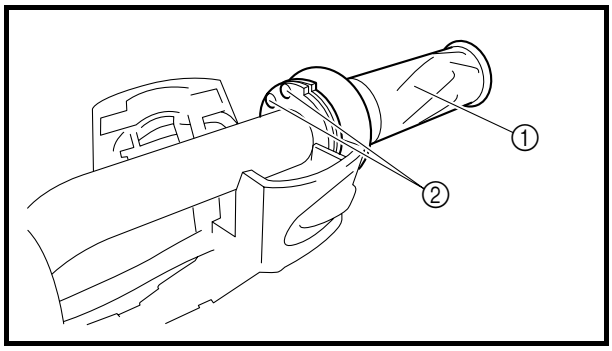

6. Install:
   - throttle grip ①
   - throttle cables ②
   - right handlebar switch ③
   - grip end

7 Nm (0.7 m · kg, 5.1 ft · lb)

NOTE:
- Lubricate the inside of the throttle grip with a thin coat of lithium-soap-based grease and install it onto the handlebar.
- Route the throttle cables through the slot in the right handlebar switch, and then install the cables.
- Align the projection ⓐ on the right handlebar switch with the hole ⓑ in the handlebar.
- There should be 1 ~ 3 mm (0.04 ~ 0.12 in) of clearance ⓒ between the throttle grip and the grip end.

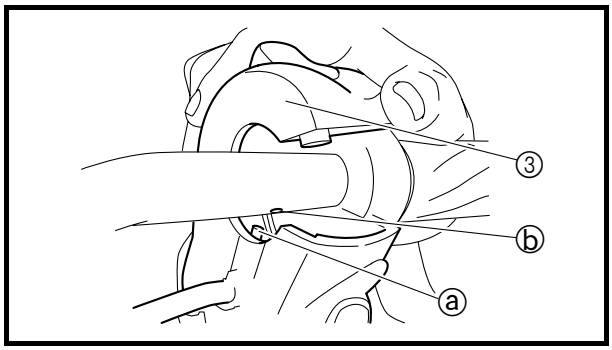

7. Install:
   - throttle cable holder

⚠ WARNING
Make sure the throttle grip operates smoothly.

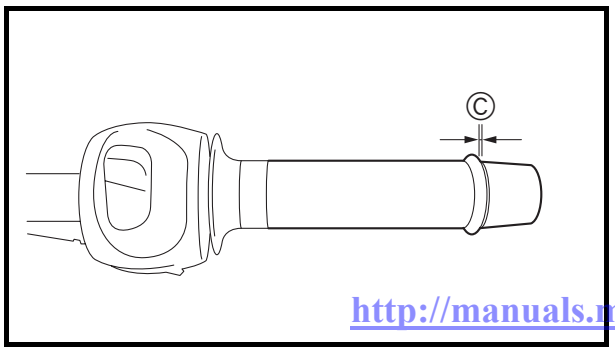

http://manuals.magnamaniac.com

8. Install:
   - brake master cylinder
   - brake master cylinder holder

   Refer to “FRONT AND REAR BRAKES”.
9. Adjust:
   - clutch cable free play

   Refer to “ADJUSTING THE CLUTCH CABLE FREE PLAY” in chapter 3.

Clutch cable free play (at the end of the clutch lever)
10.0 ~ 15.0 mm (0.39 ~ 0.59 in)

10. Adjust:
    - throttle cable free play

    Refer to “ADJUSTING THE THROTTLE CABLE FREE PLAY” in chapter 3.

Throttle cable free play (at the flange of the throttle grip)
3.0 ~ 5.0 mm (0.12 ~ 0.20 in)

http://manuals.magnamaniac.com

EAS00675
STEERING HEAD
LOWER BRACKET

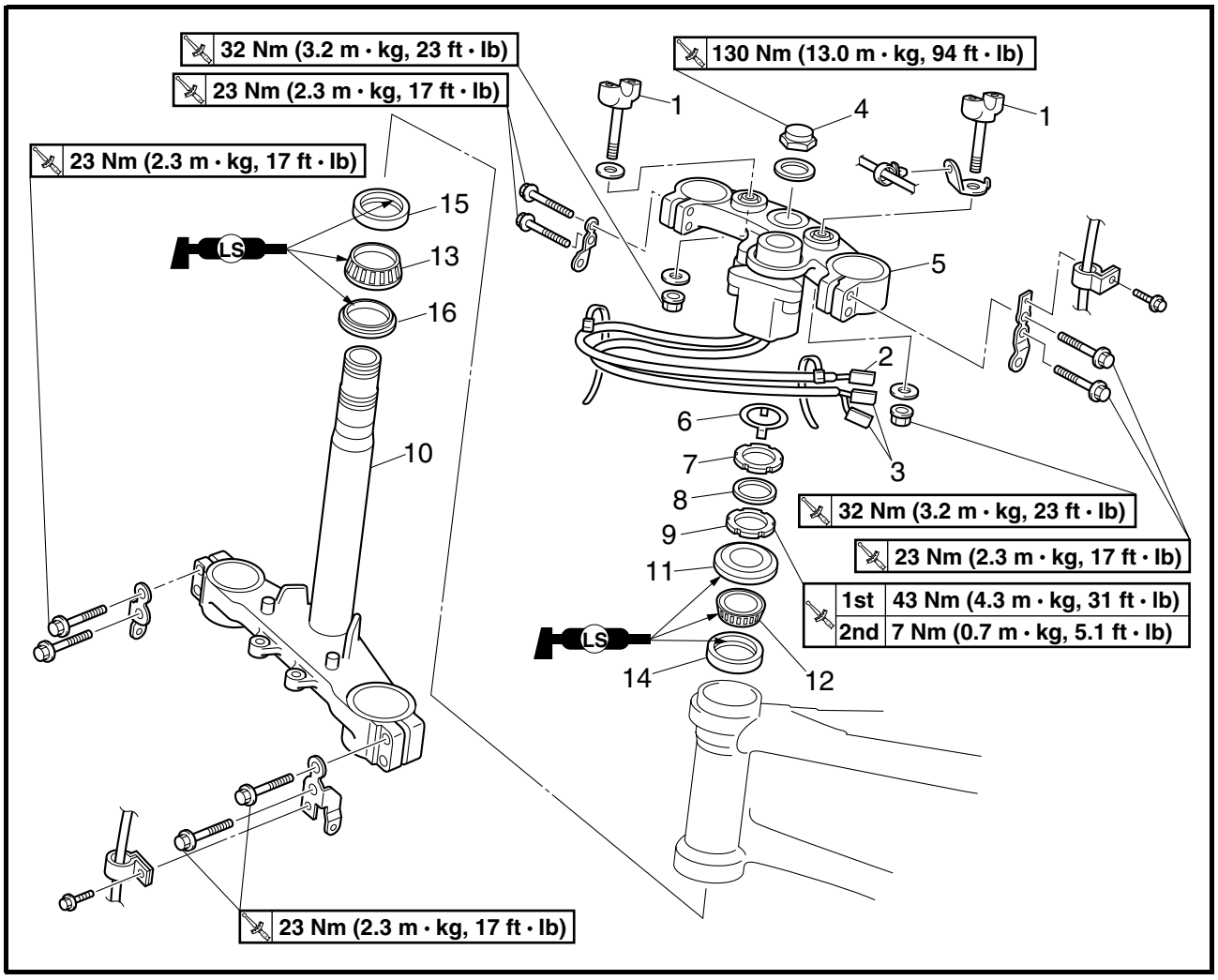

Order	Job/Part	Q'ty	Remarks
	Removing the lower bracket		Remove the parts in the order listed.
	Front wheel		Refer to "FRONT WHEEL AND BRAKE DISC".
	Front fork legs		Refer to "FRONT FORK".
	Handlebar		Refer to "HANDLEBAR".
1	Lower handlebar holder	2	
2	Immobilizer unit coupler	1	Disconnect.
3	Main switch coupler	2	Disconnect.
4	Steering stem nut	1	Refer to "REMOVING THE LOWER BRACKET" and "INSTALLING THE STEERING HEAD".
5	Upper bracket	1	
6	Lock washer	1	
7	Upper ring nut	1	
8	Rubber washer	1	
9	Lower ring nut	1	
10	Lower bracket	1	

http://manuals.magnamaniac.com

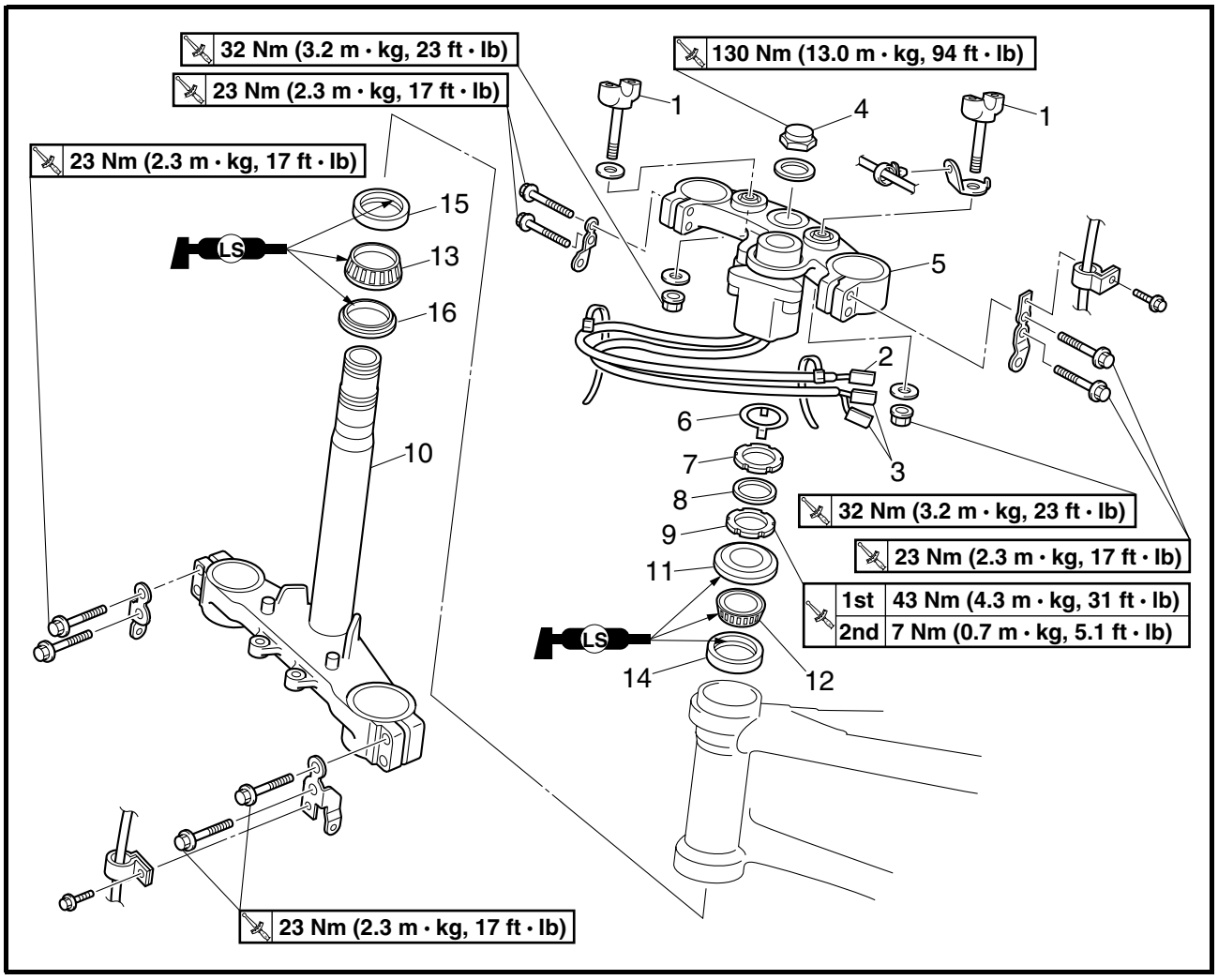

Order	Job/Part	Q'ty	Remarks
11	Bearing cover	1	
12	Upper bearing	1	Refer to "INSTALLING THE STEERING HEAD".
13	Lower bearing	1	
14	Upper bearing outer race	1	
15	Lower bearing outer race	1	
16	Dust seal	1	
			For installation, reverse the removal procedure.

http://manuals.magnamaniac.com

EAS00679
REMOVING THE LOWER BRACKET

1. Stand the motorcycle on a level surface.

⚠ WARNING

Securely support the motorcycle so that there is no danger of it falling over.

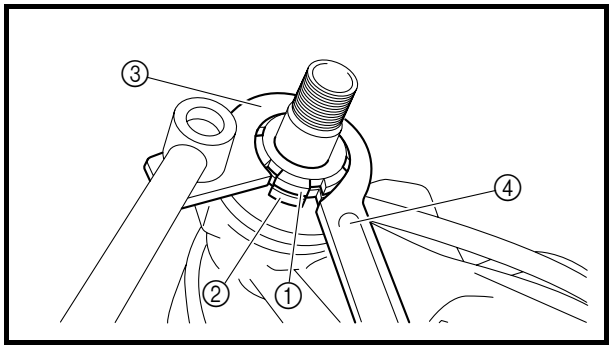

2. Remove:
   - upper ring nut ①
   - rubber washer
   - lower ring nut ②
   - lower bracket

NOTE:

Hold the lower ring nut with the steering nut wrench ③, and then remove the upper ring nut with the ring nut wrench ④.

Steering nut wrench
90890-01403
Ring nut wrench
90890-01268

⚠ WARNING

Securely support the lower bracket so that there is no danger of it falling.

EAS00681
CHECKING THE STEERING HEAD

1. Wash:
   - bearings
   - bearing races

Recommended cleaning solvent
Kerosene

2. Check:
   - bearings
   - bearing races

   Damage/pitting → Replace.

http://manuals.magnamaniac.com

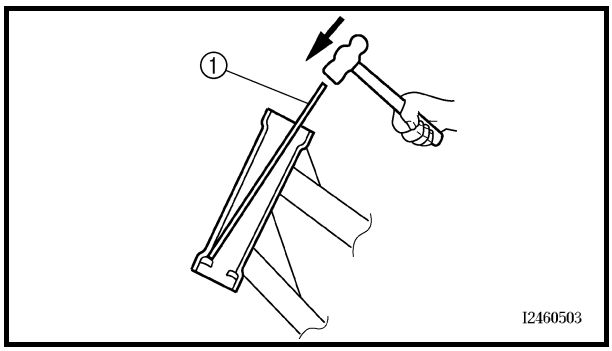

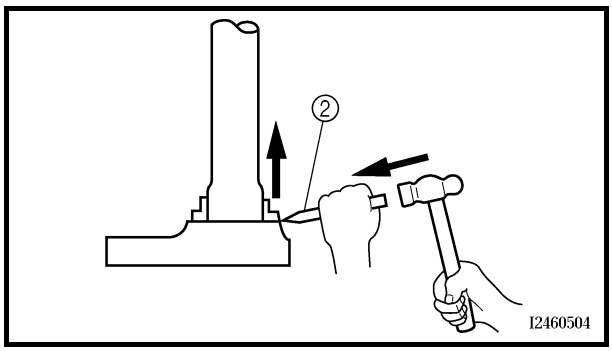

3. Replace:
   - bearings
   - bearing races

▼▼▼▼▼▼▼▼▼▼▼▼▼▼▼▼▼▼▼▼▼▼▼▼▼▼▼▼▼▼▼▼▼▼

a. Remove the bearing races from the steering head pipe with a long rod ① and hammer.
b. Remove the bearing race from the lower bracket with a floor chisel ② and hammer.
c. Install a new dust seal and new bearing races.

CAUTION:

If the bearing race is not installed properly, the steering head pipe could be damaged.

NOTE:

- Always replace the bearings and bearing races as a set.
- Whenever the steering head is disassembled, replace the dust seal.

▲▲▲▲▲▲▲▲▲▲▲▲▲▲▲▲▲▲▲▲▲▲▲▲▲▲▲▲▲▲▲▲▲▲

4. Check:
   - upper bracket
   - lower bracket
     (along with the steering stem)
     Bends/cracks/damage → Replace.

EAS00683
INSTALLING THE STEERING HEAD

1. Lubricate:
   - upper bearing
   - lower bearing
   - bearing races

	Recommended lubricant **Lithium-soap-based grease**

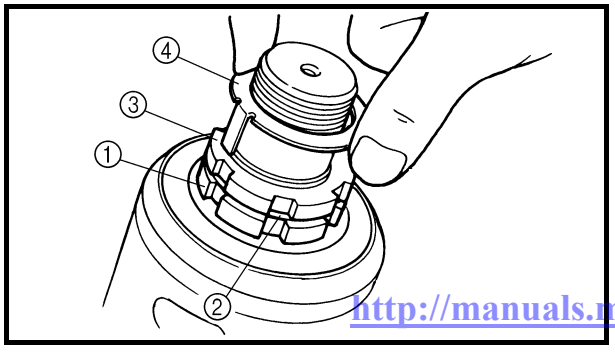

2. Install:
   - lower ring nut ①
   - rubber washer ②
   - upper ring nut ③
   - lock washer ④
     Refer to “CHECKING THE STEERING HEAD” in chapter 3.

http://manuals.magnamaniac.com

3. Install:
   - upper bracket
   - steering stem nut

NOTE:
Temporarily tighten the steering stem nut.

4. Install:
   - front fork legs
     Refer to “INSTALLING THE FRONT FORK LEGS”.

NOTE:
Temporarily tighten the lower bracket pinch bolts.

5. Tighten:
   - steering stem nut

130 Nm (13.0 m · kg, 94 ft · lb)

6. Install:
   - lower handlebar holders
   - lower handlebar holder nuts

NOTE:
Temporarily tighten the lower handlebar nuts.

7. Install:
   - handlebar
   - upper handlebar holder
     Refer to “HANDLEBAR”.
8. Tighten:
   - lower handlebar holder nuts

32 Nm (3.2 m · kg, 23 ft · lb)

http://manuals.magnamaniac.com

EAS00685
REAR SHOCK ABSORBER ASSEMBLY

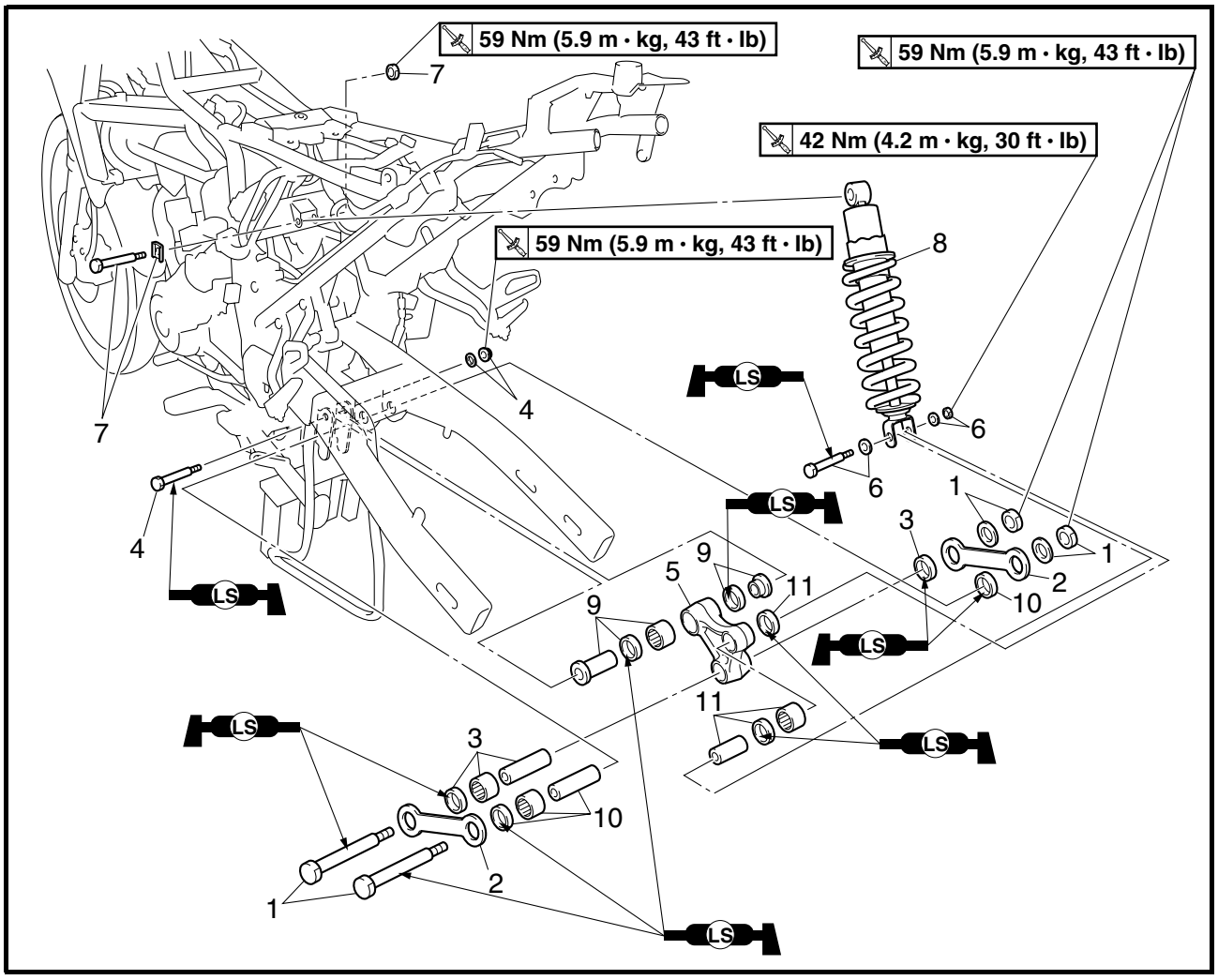

Order	Job/Part	Q'ty	Remarks
	Removing the rear shock absorber assembly		Remove the parts in the order listed.
	Seat/side panels (left and right)/rear cover		Refer to "COWLING AND COVER" in chapter 3.
	Fuel tank		Refer to "FUEL TANK" in chapter 3.
	Rear fender/air filter case		Refer to "AIR FILTER CASE" in chapter 3.
	Rear wheel		Refer to "REAR WHEEL, BRAKE DISC, AND REAR WHEEL SPROCKET".
1	Self-locking nut/washer/bolt	2/2/2	Refer to "REMOVING THE REAR SHOCK ABSORBER ASSEMBLY" and "INSTALLING THE REAR SHOCK ABSORBER ASSEMBLY".
2	Connecting arm	2	
3	Oil seal/bearing/spacer	2/1/1	

http://manuals.magnamaniac.com

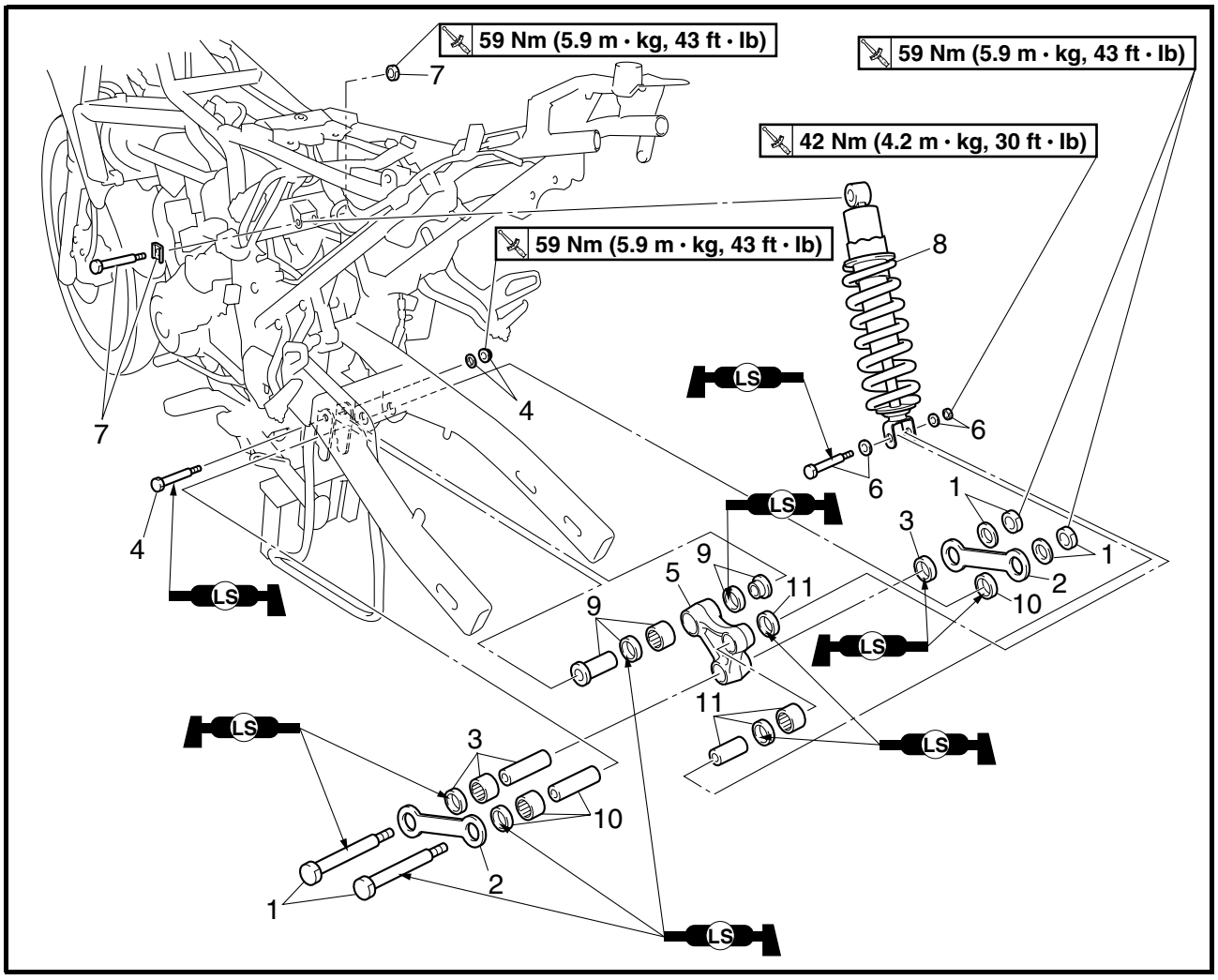

Order	Job/Part	Q'ty	Remarks
4	Self-locking nut/washer/nut	1/1/1	Refer to "REMOVING THE REAR SHOCK ABSORBER ASSEMBLY" and "INSTALLING THE REAR SHOCK ABSORBER ASSEMBLY".
5	Relay arm	1	
6	Self-locking nut/washer/bolt	1/2/1	
7	Self-locking nut/washer/bolt	1/1/1	
8	Rear shock absorber assembly	1	
9	Oil seal/bearing/spacer	2/1/2	Refer to "INSTALLING THE RELAY ARM".
10	Oil seal/bearing/spacer	2/1/1	
11	Oil seal/bearing/spacer	2/1/1	
			For installation, reverse the removal procedure.

http://manuals.magnamaniac.com

EAS00686
HANDLING THE REAR SHOCK ABSORBER

⚠ WARNING

This rear shock absorber contains highly compressed nitrogen gas. Before handling the rear shock absorber, read and make sure you understand the following information. The manufacturer cannot be held responsible for property damage or personal injury that may result from improper handling of the rear shock absorber.

- **Do not tamper or attempt to open the rear shock absorber.**
- **Do not subject the rear shock absorber to an open flame or any other source of high heat. High heat can cause an explosion due to excessive gas pressure.**
- **Do not deform or damage the rear shock absorber in any way. Rear shock absorber damage will result in poor damping performance.**

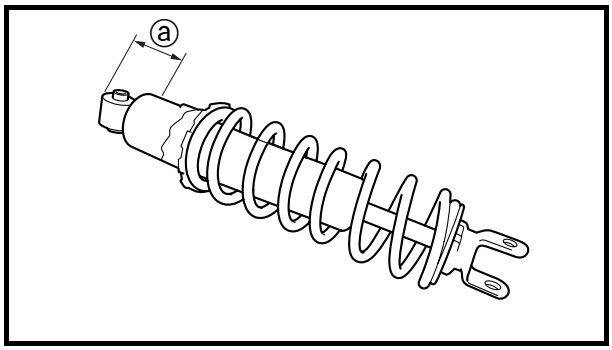

EAS00688
DISPOSING OF A REAR SHOCK ABSORBER

Gas pressure must be released before disposing of a rear shock absorber. To release the gas pressure, drill a 2 ~ 3 mm hole through the rear shock absorber at a point ⓐ 30 ~ 60 mm from its end as shown.

⚠ WARNING

Wear eye protection to prevent eye damage from released gas or metal chips.

http://manuals.magnamaniac.com

EAS00690
REMOVING THE REAR SHOCK ABSORBER ASSEMBLY

1. Stand the motorcycle on a level surface.

⚠ WARNING

Securely support the motorcycle so that there is no danger of it falling over.

NOTE:

Place the motorcycle on a suitable stand so that the rear wheel is elevated.

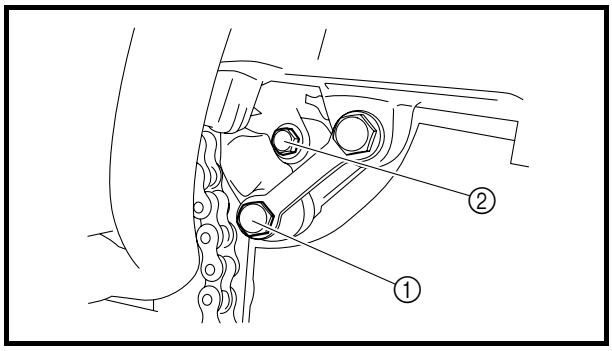

2. Remove:
   - connecting arm bolt ①
   - rear shock absorber assembly lower bolt ②

NOTE:

While removing the rear shock absorber assembly lower bolt, hold the swingarm so that it does not drop down.

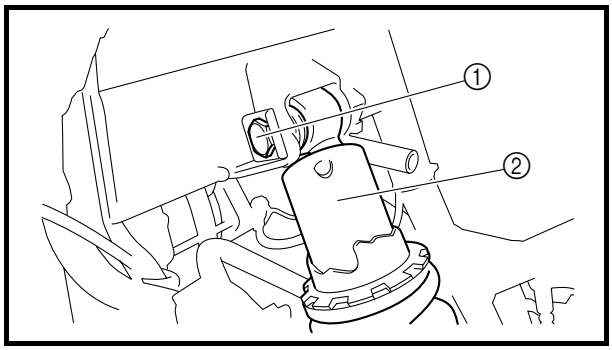

3. Remove:
   - rear shock absorber assembly upper bolt ①
   - rear shock absorber assembly ②

NOTE:

Raise the swingarm, and then remove the rear shock absorber assembly from between the swingarm and relay arm.

http://manuals.magnamaniac.com

EAS00695
CHECKING THE REAR SHOCK ABSORBER ASSEMBLY

1. Check:
   - rear shock absorber rod
     Bends/damage → Replace the rear shock absorber assembly.
   - rear shock absorber
     Gas leaks/oil leaks → Replace the rear shock absorber assembly.
   - spring
     Damage/wear → Replace the rear shock absorber assembly.
   - bolts
     Bends/damage/wear → Replace.

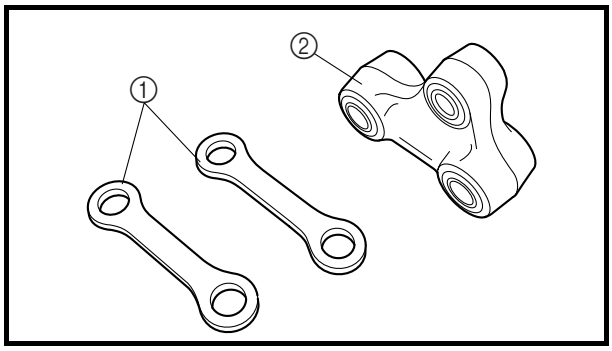

CHECKING THE CONNECTING ARMS AND RELAY ARM

1. Check:
   - connecting arms ①
   - relay arm ②
     Damage/wear → Replace.
2. Check:
   - spacers
   - oil seals
   - bearings
     Damage/pitching/scratches → Replace.

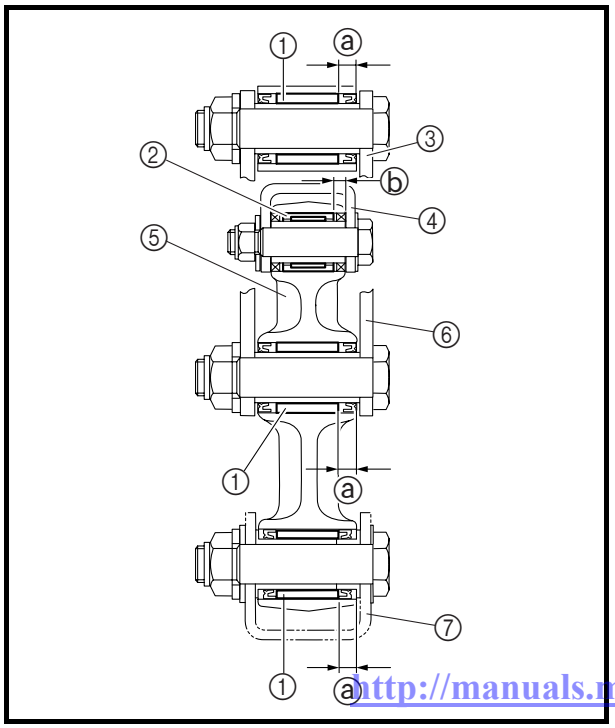

INSTALLING THE RELAY ARM

1. Install:
   - bearings ①
     (to the relay arm and swingarm)

Installed depth ⓐ
7.2 ~ 8.2 mm (0.28 ~ 0.32 in)

   - bearing ②
     (to the relay arm)

Installed depth ⓑ
4.0 ~ 5.0 mm (0.16 ~ 0.20 in)

③ Swingarm
④ Rear shock absorber
⑤ Relay arm
⑥ Connecting arm
⑦ Frame

http://manuals.magnamaniac.com

EAS00697
INSTALLING THE REAR SHOCK ABSORBER ASSEMBLY

1. Lubricate:
   - bearings
   - bolts

	Recommended lubricant **Lithium-soap-based grease**

2. Install:
   - rear shock absorber assembly

NOTE:
When installing the rear shock absorber assembly, lift up the swingarm.

3. Tighten:
   - rear shock absorber assembly upper nut
     59 Nm (5.9 m · kg, 43 ft · lb)
   - rear shock absorber assembly lower nut
     42 Nm (4.2 m · kg, 30 ft · lb)
   - relay-arm-to-frame nut
     59 Nm (5.9 m · kg, 43 ft · lb)
   - relay-arm-to-connecting-arm nuts
     59 Nm (5.9 m · kg, 43 ft · lb)
   - connecting-arm-to-swingarm nut
     59 Nm (5.9 m · kg, 43 ft · lb)
4. Adjust:
   - drive chain slack
     Refer to “ADJUSTING THE DRIVE CHAIN SLACK” in chapter 3.

	Drive chain slack **40.0 ~ 55.0 mm (1.57 ~ 2.17 in)**

http://manuals.magnamaniac.com

EAS00700
SWINGARM AND DRIVE CHAIN

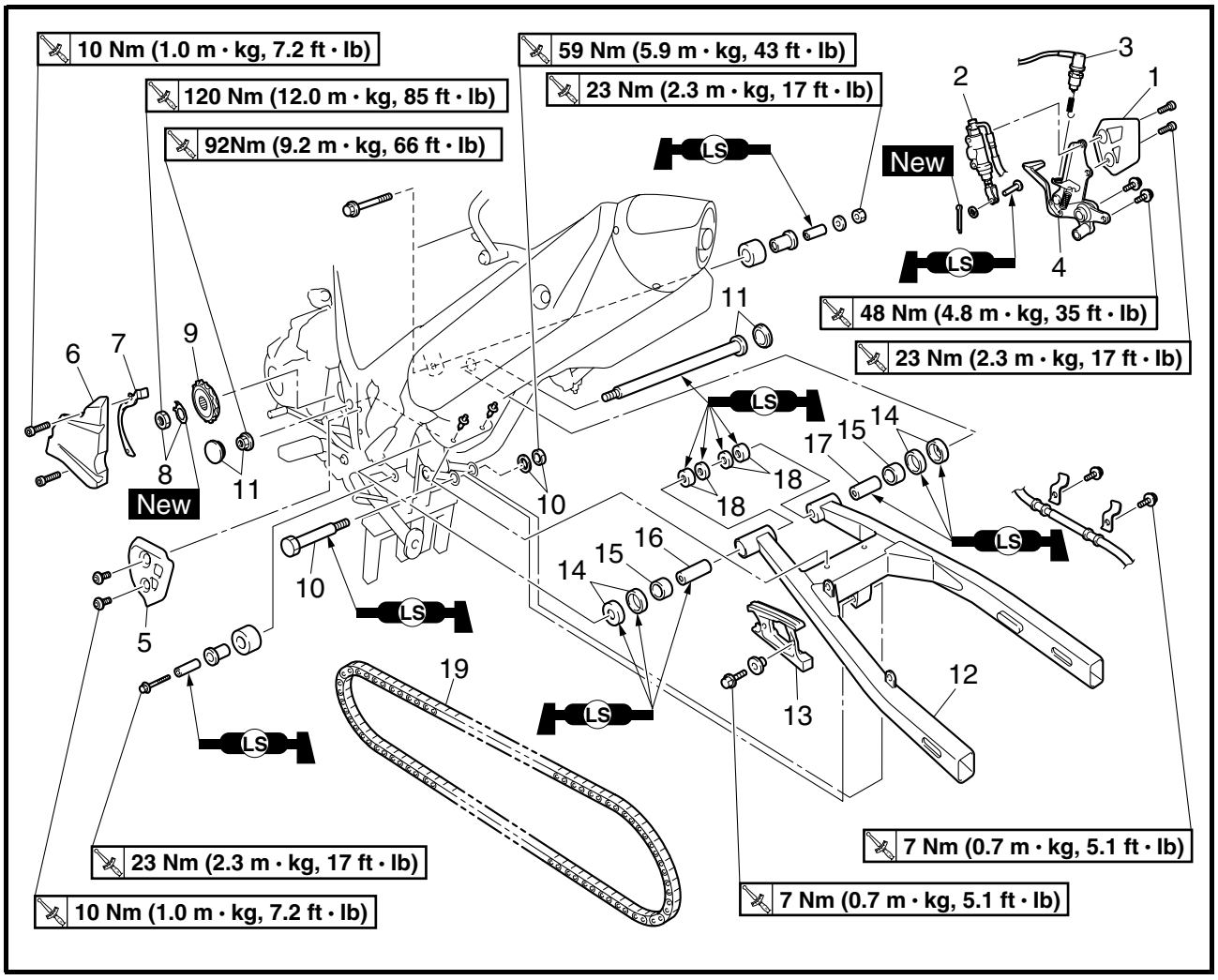

Order	Job/Part	Q'ty	Remarks
	Removing the swingarm and drive chain		Remove the parts in the order listed.
	Rear wheel		Refer to "REAR WHEEL, BRAKE DISC, AND REAR WHEEL SPROCKET".
1	Right side heel plate	1	
2	Brake master cylinder	1	
3	Rear brake light switch	1	
4	Right footrest/brake pedal assembly	1	
5	Left side heel plate	1	
6	Drive sprocket cover	1	Refer to "REMOVING THE DRIVE SPROCKET" and "INSTALLING THE SWINGARM".
7	Drive chain guard	1	
8	Nut/lock washer	1/1	
9	Drive sprocket	1	

http://manuals.magnamaniac.com

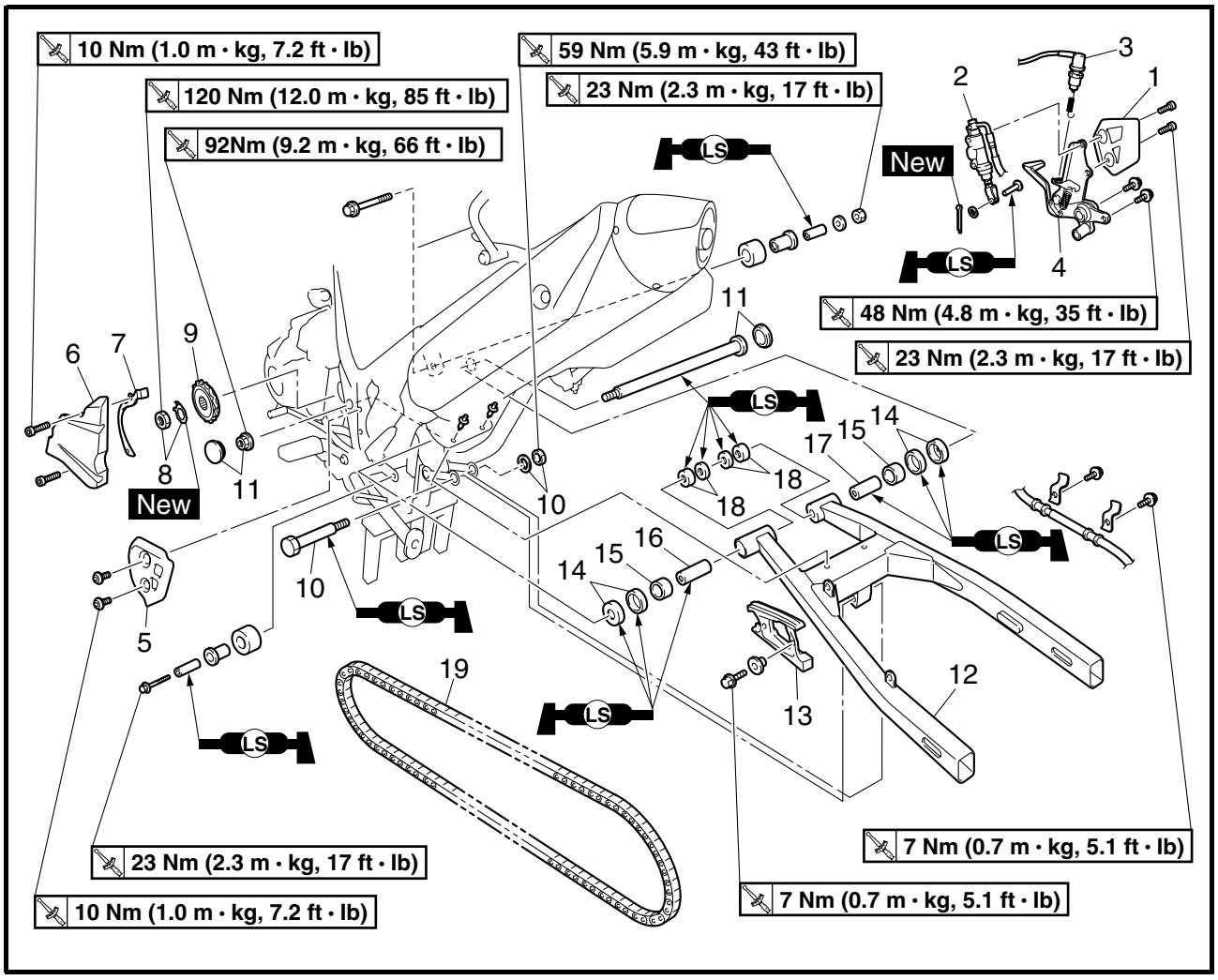

Order	Job/Part	Q'ty	Remarks
10	Nut/washer/bolt	1/1/1	Refer to "REMOVING THE DRIVE SPROCKET" and "INSTALLING THE SWINGARM".
11	Cap/pivot shaft nut/pivot shaft	2/1/1	
12	Swingarm	1	Refer to "REMOVING THE SWINGARM" and "INSTALLING THE SWINGARM".
13	Drive chain guide	1	
14	Dust cover/oil seal	2/2	Refer to "INSTALLING THE SWINGARM".
15	Bearing	2	
16	Spacer	1	
17	Spacer	1	
18	Oil seal/bushing	2/2	
19	Drive chain	1	Refer to "REMOVING THE DRIVE CHAIN". For installation, reverse the removal procedure.

http://manuals.magnamaniac.com

EAS00703
REMOVING THE SWINGARM

1. Stand the motorcycle on a level surface.

⚠ WARNING

Securely support the motorcycle so that there is no danger of it falling over.

NOTE:

Place the motorcycle on a suitable stand so that the rear wheel is elevated.

2. Measure:
   - swingarm side play
   - swingarm vertical movement

▼▼▼▼▼▼▼▼▼▼▼▼▼▼▼▼▼▼▼▼▼▼▼▼▼▼▼▼▼▼▼▼▼▼

a. Measure the tightening torque of the pivot shaft nut.

Pivot shaft nut
92 Nm (9.2 m · kg, 66 ft · lb)

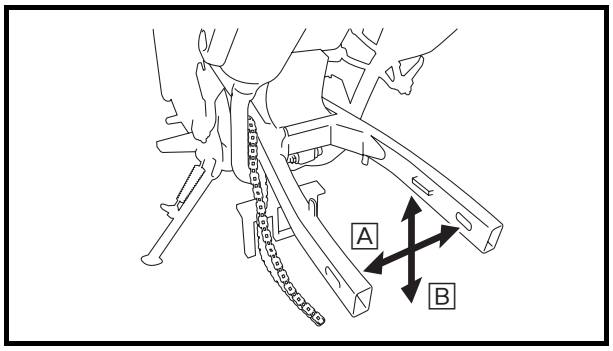

b. Measure the swingarm side play A by moving the swingarm from side to side.
c. If the swingarm side play is out of specification, check the spacers, bearings, and dust covers.

Swingarm side play (at the end of the swingarm)
1.0 mm (0.04 in)

d. Check the swingarm vertical movement B by moving the swingarm up and down.
   If swingarm vertical movement is not smooth or if there is binding, check the spacers, bearings, and dust covers.

▲▲▲▲▲▲▲▲▲▲▲▲▲▲▲▲▲▲▲▲▲▲▲▲▲▲▲▲▲▲▲▲▲▲

3. Remove:
   - swingarm shaft nut
   - pivot shaft
   - swingarm

http://manuals.magnamaniac.com

REMOVING THE DRIVE SPROCKET

NOTE:
Loosen the drive sprocket nut before removing the rear wheel.

1. Remove:
   - drive sprocket cover
   - chain guard
2. Straighten the lock washer tab ⓐ
3. Remove:
   - drive sprocket nut ①
   - lock washer ②
   - drive sprocket ③

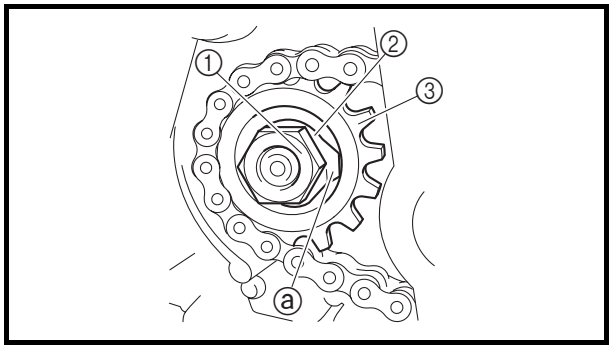

EAS00704
REMOVING THE DRIVE CHAIN

1. Stand the motorcycle on a level surface.

⚠ WARNING

Securely support the motorcycle so that there is no danger of it falling over.

NOTE:
Place the motorcycle on a suitable stand so that the rear wheel is elevated.

2. Remove:
   - drive chain

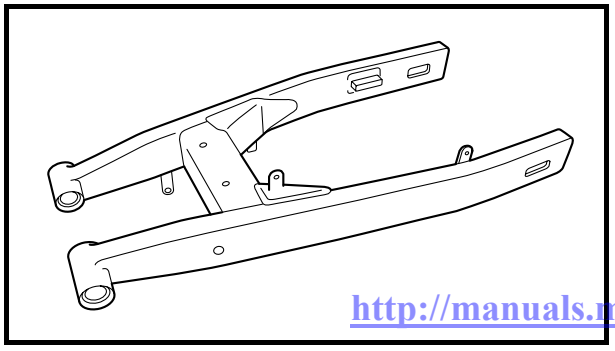

EAS00707
CHECKING THE SWINGARM

1. Check:
   - swingarm
     Bends/cracks/damage → Replace.

http://manuals.magnamaniac.com

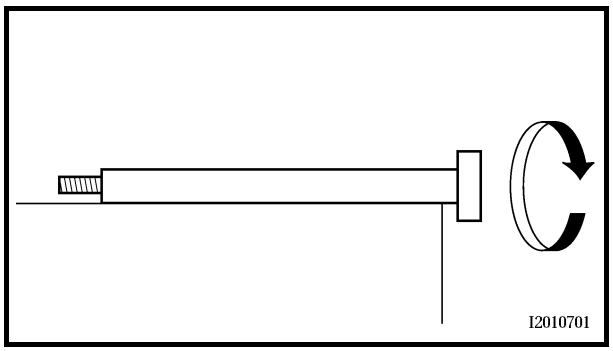

2. Check:
   • pivot shaft
     Roll the pivot shaft on a flat surface.
     Bends → Replace.

⚠ WARNING

Do not attempt to straighten a bent pivot shaft.

3. Wash:
   • pivot shaft
   • dust covers
   • spacer
   • bushing
   • bearings

Recommended cleaning solvent
Kerosene

4. Check:
   • dust covers
   • spacers
   • oil seals
     Damage/wear → Replace.
   • bearings
   • bushings
     Damage/pitting → Replace.

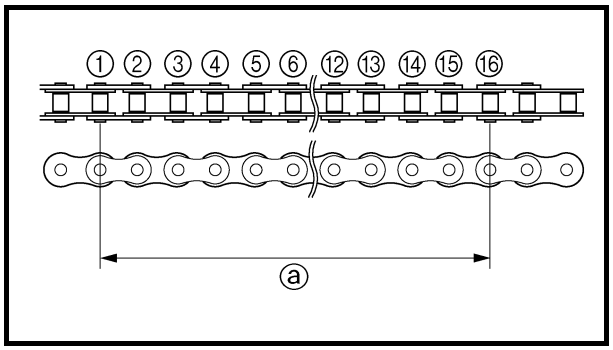

EAS00709
CHECKING THE DRIVE CHAIN

1. Measure:
   • a 15-link section ⓐ of the drive chain
     Out of specification → Replace the drive chain.

15-link drive chain section limit (maximum)
240.5 mm (9.47 in)

NOTE:

- While measuring the 15-link section, push down on the drive chain to increase its tension.
- Measure the length between drive chain roller ① and ⑯ as shown.
- Perform this measurement at two or three different places.

http://manuals.magnamaniac.com

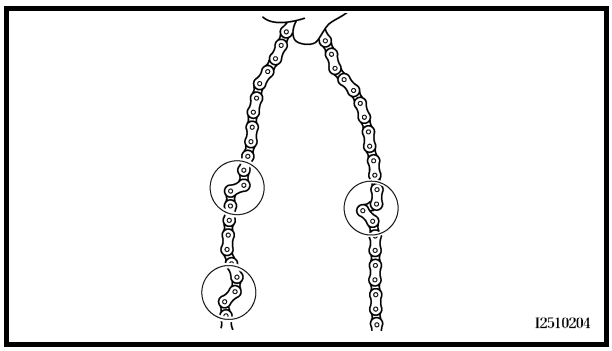

2. Check:
   • drive chain
     Stiffness → Clean and lubricate or replace.

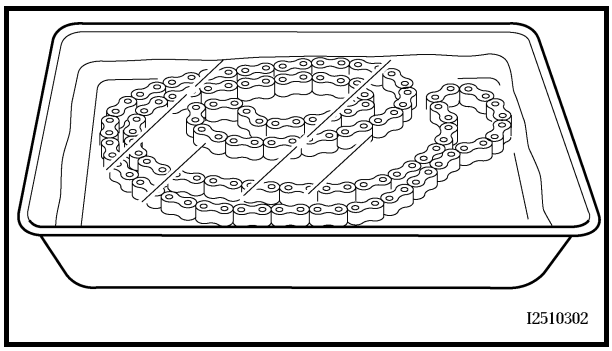

3. Clean:
   • drive chain

▼▼▼▼▼▼▼▼▼▼▼▼▼▼▼▼▼▼▼▼▼▼▼▼▼▼▼▼▼▼▼▼▼▼

a. Wipe the drive chain with a clean cloth.
b. Put the drive chain in kerosene and remove any remaining dirt.
c. Remove the drive chain from the kerosene and completely dry it.

CAUTION:

- **This motorcycle has a drive chain with small rubber O-rings ① between the drive chain side plates. Never use high-pressure water or air, steam, gasoline, certain solvents (e.g., benzine), or a coarse brush to clean the drive chain. High-pressure methods could force dirt or water into the internal sections of the drive chain, and solvents will deteriorate the O-rings. A coarse brush can also damage the O-rings. Therefore, use only kerosene to clean the drive chain.**
- **Don't soak the drive chain in kerosine for more than ten minutes, otherwise the O-rings can be damaged.**

▲▲▲▲▲▲▲▲▲▲▲▲▲▲▲▲▲▲▲▲▲▲▲▲▲▲▲▲▲▲▲▲▲▲

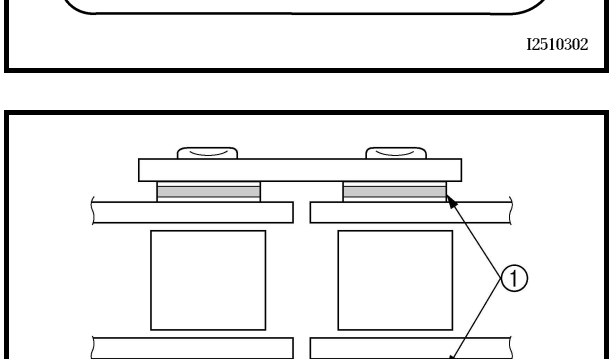

4. Check:
   • O-rings ①
     Damage → Replace the drive chain.
   • drive chain rollers ②
     Damage/wear → Replace the drive chain.
   • drive chain side plates ③
     Damage/wear → Replace the drive chain.
     Cracks → Replace the drive chain and make sure the battery breather hose is properly routed away from the drive chain and below the swingarm.

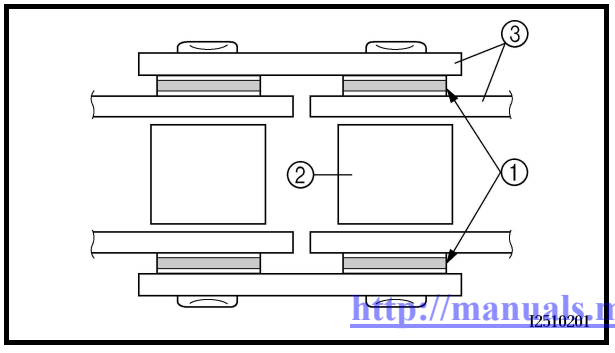

http://manuals.magnamaniac.com

5. Lubricate:
   • drive chain

Recommended lubricant
Engine oil or chain lubricant suitable for O-ring chains

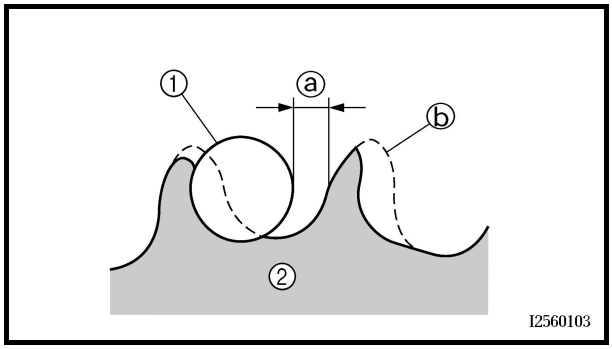

6. Check:
   • drive sprocket
   • rear wheel sprocket
   More than 1/4 tooth ⓐ wear → Replace the drive chain sprockets as a set.
   Bent teeth → Replace the drive chain sprockets as a set.

ⓑ Correct
① Drive chain roller
② Drive chain sprocket

EAS00711
INSTALLING THE SWINGARM

1. Lubricate:
   • spacers
   • dust covers
   • pivot shaft

Recommended lubricant
Lithium-soap-based grease

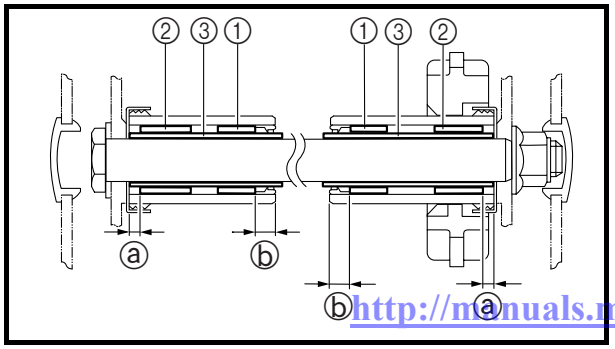

2. Install:
   • bushings ①
   • bearings ②
   • spacers ③
   (to swingarm)

Installed depth of bearing ⓐ
4 mm (0.16 in)
Installed depth of bushing ⓑ
8 mm (0.31 in)

http://manuals.magnamaniac.com

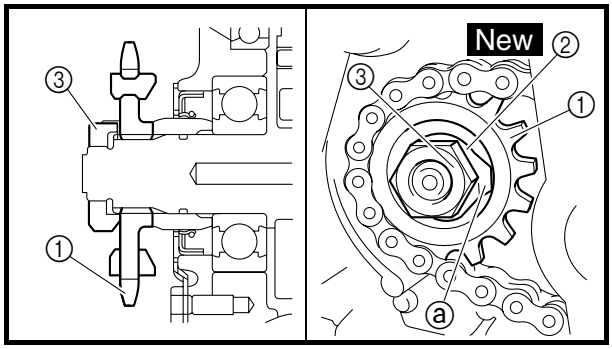

3. Install:
   - swingarm
   - pivot shaft
   - pivot shaft nut

   92 Nm (9.2 m · kg, 66 ft · lb)
4. Install:
   - connecting arm bolt
   - washer
   - connecting arm nut

   59 Nm (5.9 m · kg, 43 ft · lb)
   - rear wheel

     Refer to "INSTALLING THE REAR WHEEL".
5. Install:
   - drive sprocket ①
   - lock washer ② New
   - drive sprocket nut ③

   120 Nm (12.0 m · kg, 85 ft · lb)

NOTE:
- Install the drive sprocket ① and drive sprocket nut ③ in the direction shown.
- While applying the rear brake, tighten the drive sprocket nut.

6. Bend the lock washer tab ⓐ along a flat side of the nut.
7. Adjust:
   - drive chain slack

     Refer to "ADJUSTING THE DRIVE CHAIN SLACK" in chapter 3.

Drive chain slack
40.0 ~ 55.0 mm (1.57 ~ 2.17 in)

8. Adjust:
   - brake pedal position

     Refer to "ADJUSTING THE REAR BRAKE PEDAL" in chapter 3.

Brake pedal position (below the top of the rider footrest)
12.0 mm (0.47 in)

9. Adjust:
   - rear brake light operation timing

     Refer to "ADJUSTING THE REAR BRAKE LIGHT SWITCH" in chapter 3.

http://manuals.magnamaniac.com

http://manuals.magnamaniac.com

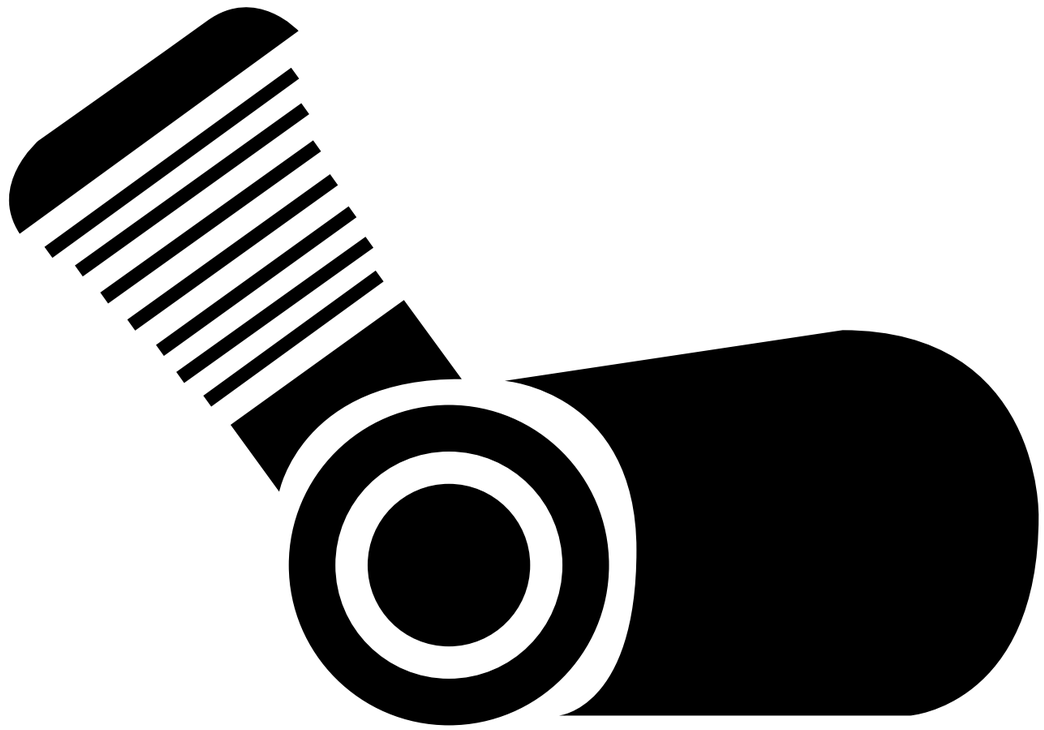

ENG

5

http://manuals.magnamaniac.com

CHAPTER 5
ENGINE

ENGINE REMOVAL 5-1
EXHAUST PIPES AND MUFFLERS 5-1
LEADS, CABLES, HOSES, AND IGNITION COIL 5-2
ENGINE 5-5
INSTALLING THE ENGINE 5-7

CYLINDER HEAD 5-8
REMOVING THE CYLINDER HEAD 5-10
CHECKING THE CYLINDER HEAD 5-11
CHECKING THE TAPPET COVERS AND CAMSHAFT SPROCKET COVER 5-12
CHECKING THE TIMING CHAIN TENSIONER 5-12
CHECKING THE CAMSHAFT SPROCKET 5-12
INSTALLING THE CYLINDER HEAD 5-12

ROCKER ARMS AND CAMSHAFT 5-16
REMOVING THE ROCKER ARMS AND CAMSHAFT 5-18
CHECKING THE CAMSHAFT 5-18
CHECKING THE DECOMPRESSION SYSTEM 5-19
CHECKING THE ROCKER ARMS AND ROCKER ARM SHAFTS 5-20
INSTALLING THE CAMSHAFT AND ROCKER ARMS 5-21

VALVES AND VALVE SPRINGS 5-23
REMOVING THE VALVES 5-24
CHECKING THE VALVES AND VALVE GUIDES 5-25
CHECKING THE VALVE SEATS 5-27
CHECKING THE VALVE SPRINGS 5-29
INSTALLING THE VALVES 5-30

CYLINDER AND PISTON 5-32
REMOVING THE CYLINDER AND PISTON 5-34
CHECKING THE CYLINDER AND PISTON 5-34
CHECKING THE PISTON RINGS 5-36
CHECKING THE PISTON PIN 5-37
INSTALLING THE PISTON AND CYLINDER 5-38

http://manuals.magnamaniac.com

CLUTCH 5-40
CLUTCH COVER 5-40
PULL LEVER SHAFT 5-41
CLUTCH 5-42
REMOVING THE CLUTCH 5-44
CHECKING THE FRICTION PLATES 5-44
CHECKING THE CLUTCH PLATES 5-45
CHECKING THE CLUTCH SPRINGS 5-45
CHECKING THE CLUTCH HOUSING 5-46
CHECKING THE CLUTCH BOSS 5-46
CHECKING THE PRESSURE PLATE 5-46
CHECKING THE PULL LEVER SHAFT AND PULL ROD 5-46
CHECKING THE PRIMARY DRIVEN GEAR 5-47
INSTALLING THE CLUTCH 5-47

OIL PUMP 5-50
CHECKING THE OIL PUMP 5-53
CHECKING THE OIL DELIVERY PIPES AND HOSES 5-54
ASSEMBLING THE OIL PUMP 5-54
INSTALLING THE OIL PUMP 5-55

BALANCER DRIVEN GEAR 5-56
REMOVING THE BALANCER DRIVEN GEAR AND BALANCER DRIVE GEAR 5-58
CHECKING THE BALANCER DRIVEN GEAR, WATER PUMP DRIVE GEAR, PRIMARY DRIVE GEAR, AND BALANCER DRIVE GEAR 5-58
INSTALLING THE BALANCER DRIVEN GEAR AND BALANCER DRIVE GEAR 5-59

SHIFT SHAFT 5-60
SHIFT SHAFT AND STOPPER LEVER 5-60
CHECKING THE SHIFT SHAFT 5-62
CHECKING THE STOPPER LEVER 5-62
INSTALLING THE SHIFT SHAFT 5-62

STARTER CLUTCH AND A.C. MAGNETO 5-63
REMOVING THE A.C. MAGNETO ROTOR 5-65
CHECKING THE STATOR COIL AND CRANKSHAFT POSITION SENSOR 5-66
CHECKING THE STARTER CLUTCH 5-66
CHECKING THE TORQUE LIMITER 5-67
INSTALLING THE A.C. MAGNETO ROTOR 5-67

http://manuals.magnamaniac.com

CRANKCASE 5-69
CRANKCASE BEARINGS 5-71
SEPARATING THE CRANKCASE 5-72
CHECKING THE OIL STRAINER AND OIL DELIVERY PIPE 3 5-72
CHECKING THE TIMING CHAIN AND TIMING CHAIN GUIDES 5-73
CHECKING THE BEARINGS AND OIL SEALS 5-73
CHECKING THE CRANKCASE 5-73
ASSEMBLING THE CRANKCASE 5-74

CRANKSHAFT 5-76
CRANKSHAFT AND BALANCER 5-76
REMOVING THE CRANKSHAFT ASSEMBLY 5-77
CHECKING THE CRANKSHAFT 5-77
INSTALLING THE CRANKSHAFT 5-78

TRANSMISSION 5-79
MAIN AXLE 5-80
DRIVE AXLE 5-81
CHECKING THE SHIFT FORKS 5-82
CHECKING THE SHIFT DRUM ASSEMBLY 5-82
CHECKING THE TRANSMISSION 5-82
ASSEMBLING THE MAIN AXLE AND DRIVE AXLE 5-83
INSTALLING THE TRANSMISSION 5-84

http://manuals.magnamaniac.com

http://manuals.magnamaniac.com

EAS00188

ENGINE

ENGINE REMOVAL

EXHAUST PIPES AND MUFFLERS

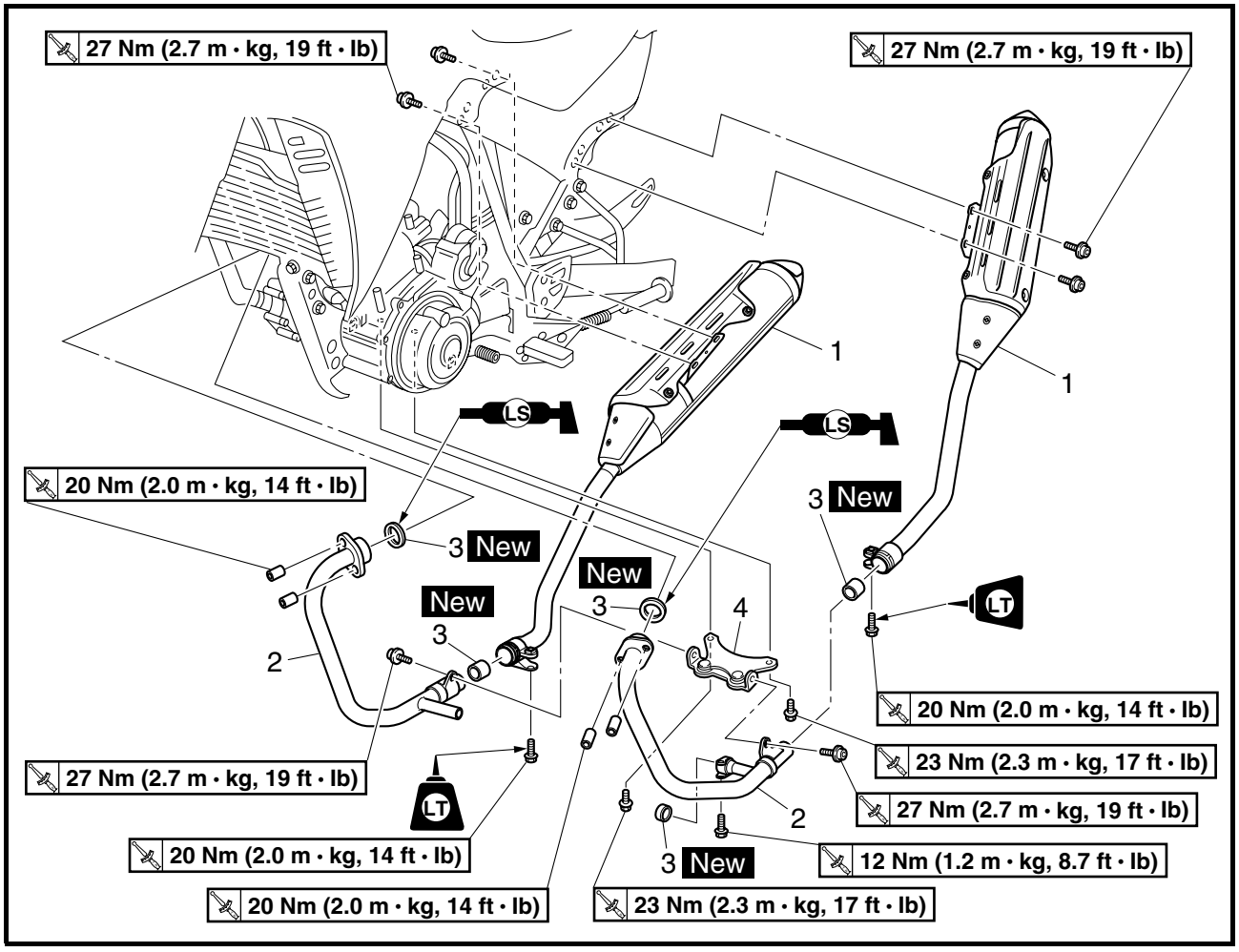

Order	Job/Part	Q'ty	Remarks
	Removing the exhaust pipes and mufflers		Remove the parts in the order listed.
1	Muffler (left and right)	2	
2	Exhaust pipe (left and right)	2	
3	Gasket	5	
4	Exhaust pipe bracket	1	
			For installation, reverse the removal procedure.

http://manuals.magnamaniac.com

LEADS, CABLES, HOSES, AND IGNITION COIL

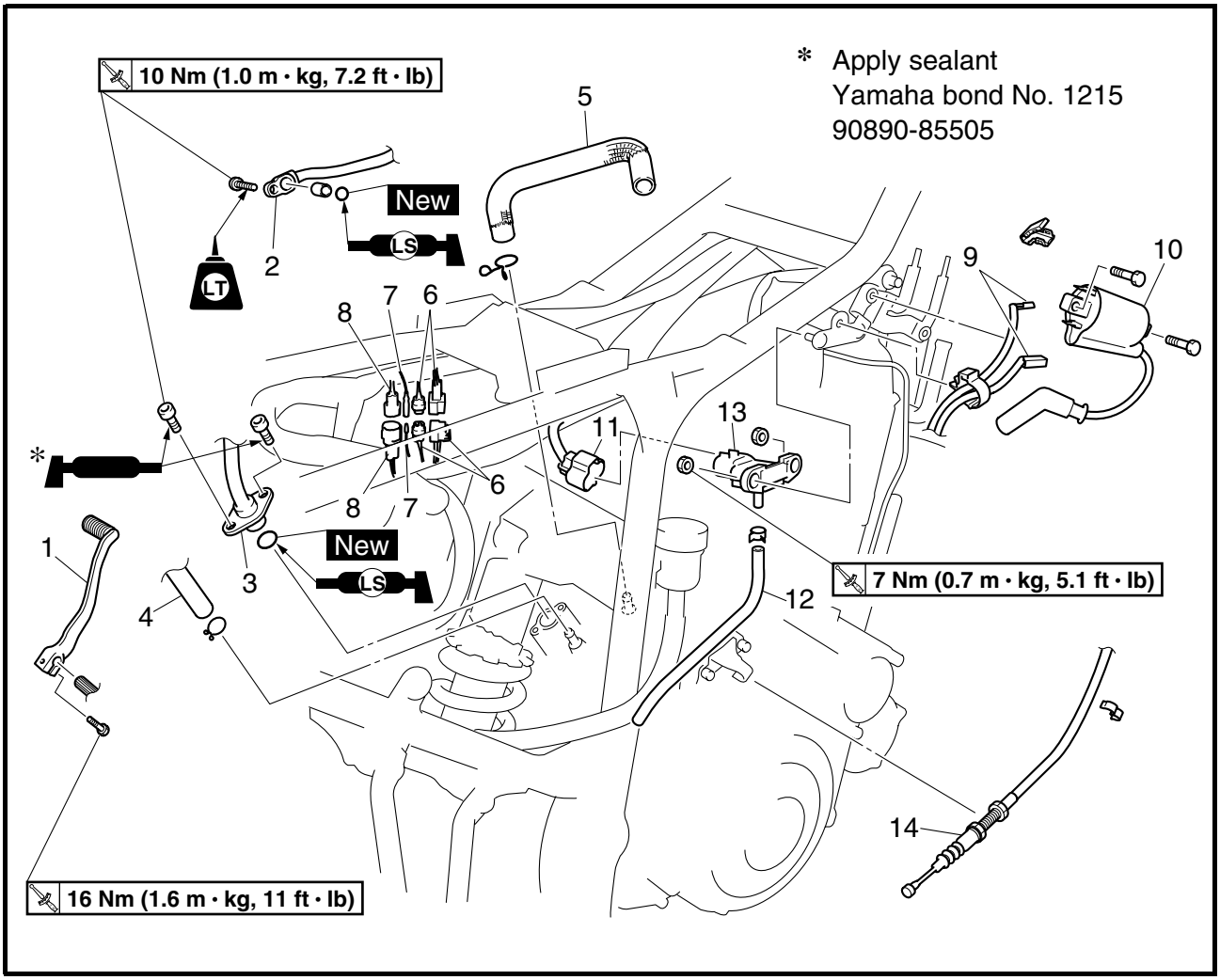

Order	Job/Part	Q'ty	Remarks
	Removing the leads, cables, hoses, and ignition coil		Remove the parts in the order listed.
	Engine oil		Drain. Refer to "CHANGING THE ENGINE OIL" in chapter 3.
	Coolant		Drain. Refer to "CHANGING THE COOLANT" in chapter 3.
	Seat/side panels (left and right)/rear cover		Refer to "COWLING AND COVER" in chapter 3.
	Fuel tank side covers (left and right)/ fuel tank		Refer to "FUEL TANK" in chapter 3.
	Rear wheel		Refer to "REAR WHEEL, BRAKE DISC, AND REAR WHEEL SPROCKET" in chapter 4.

http://manuals.magnamaniac.com

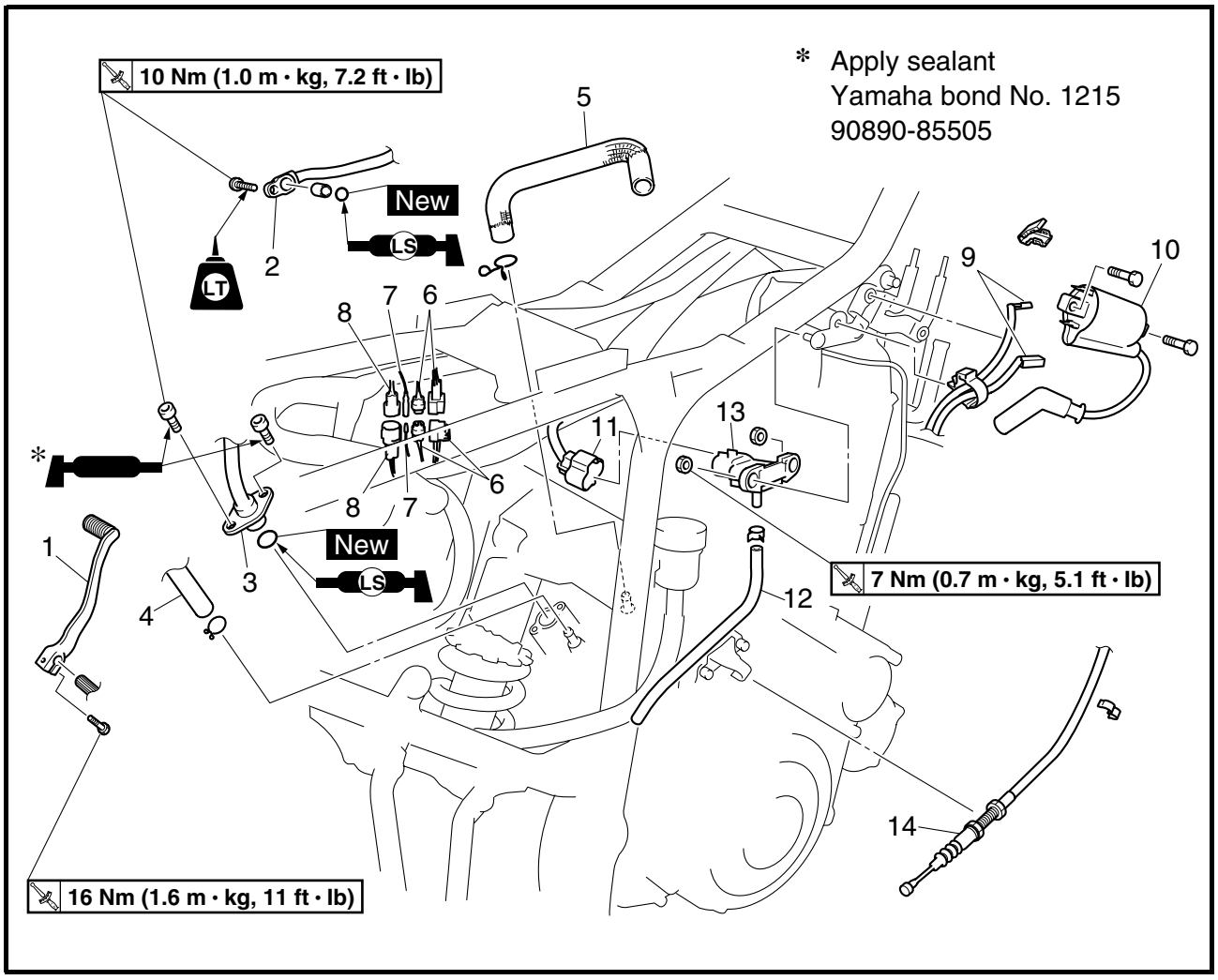

Order	Job/Part	Q'ty	Remarks
	Starter motor		Refer to "STARTER MOTOR" in chapter 8.
	Air filter case		Refer to "AIR FILTER CASE" in chapter 3.
	Throttle body/fast idle plunger inlet hose		Refer to "THROTTLE BODY ASSEMBLY" in chapter 7.
	Thermostat/thermo sensor		Refer to "THERMOSTAT" in chapter 6.
	Radiator		Refer to "RADIATOR" in chapter 6.
	Water pump assembly/water pump outlet hose		Refer to "WATER PUMP" in chapter 6.
	Air cut-off valve assembly/air-filter-to-air-cut-off-valve hose		Refer to "AIR INDUCTION SYSTEM" in chapter 7.
	Swingarm		Refer to "SWINGARM AND DRIVE CHAIN" in chapter 4.
1	Shift pedal	1	
2	Oil delivery hose 1	1	Disconnect.

http://manuals.magnamaniac.com

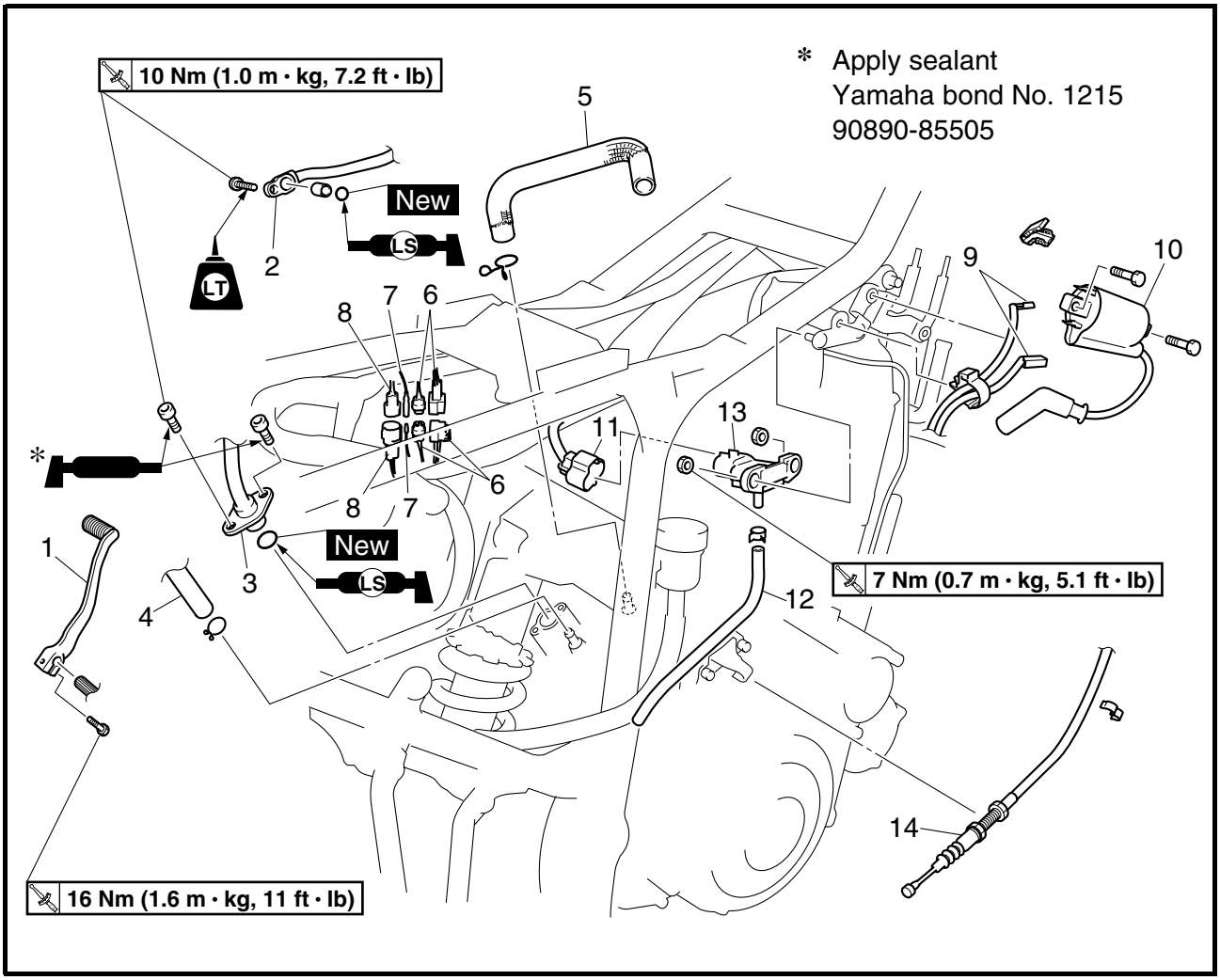

Order	Job/Part	Q'ty	Remarks
3	Oil delivery hose 2	1	Disconnect.
4	Oil tank breather hose	1	Disconnect.
5	Crankcase-to-crankcase-breather-chamber hose	1	
6	A.C. magneto coupler	2	Disconnect.
7	Neutral switch connector	1	Disconnect.
8	Speed sensor coupler	1	Disconnect.
9	Ignition coil lead	2	Disconnect.
10	Ignition coil	1	
11	Intake air pressure sensor coupler	1	Disconnect.
12	Vacuum hose	1	
13	Intake air pressure sensor	1	
14	Clutch cable	1	
			For installation, reverse the removal procedure.

http://manuals.magnamaniac.com

EAS00191

ENGINE

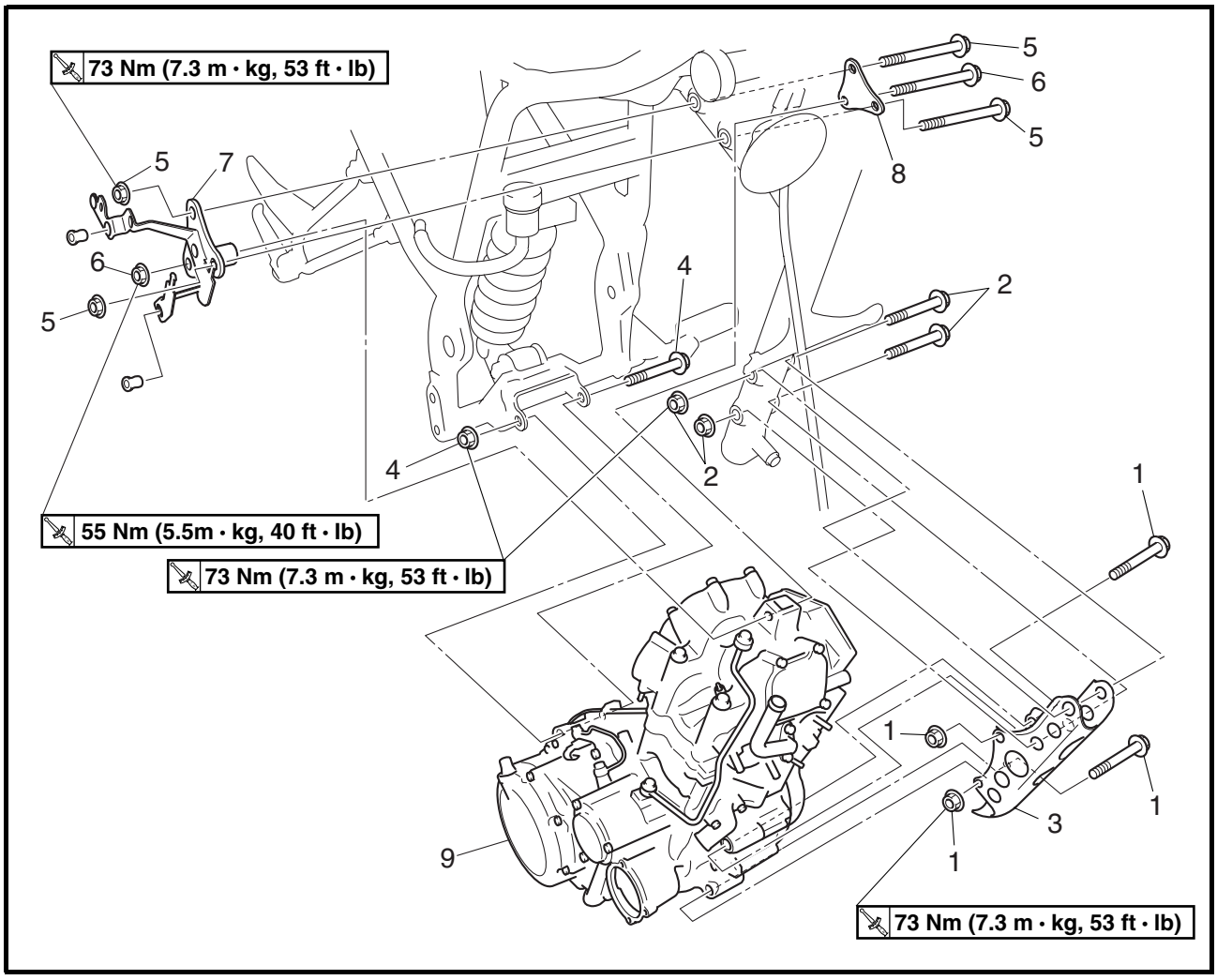

Order	Job/Part	Q'ty	Remarks
	Removing the engine		Remove the parts in the order listed. **NOTE:** Place a suitable stand under the frame and engine. **CAUTION:** **Install all of the nuts and bolt, and then tighten them to specified torques.**
1	Engine front mounting bracket bolt/nut	2/2	Refer to "INSTALLING THE ENGINE".
2	Engine front bracket bolt/nut	2/2	
3	Engine front bracket	1	
4	Engine rear mounting bolt/nut	1/1	
5	Engine upper bracket bolt/nut	2/2	
6	Engine upper mounting bolt/nut	1/1	

http://manuals.magnamaniac.com

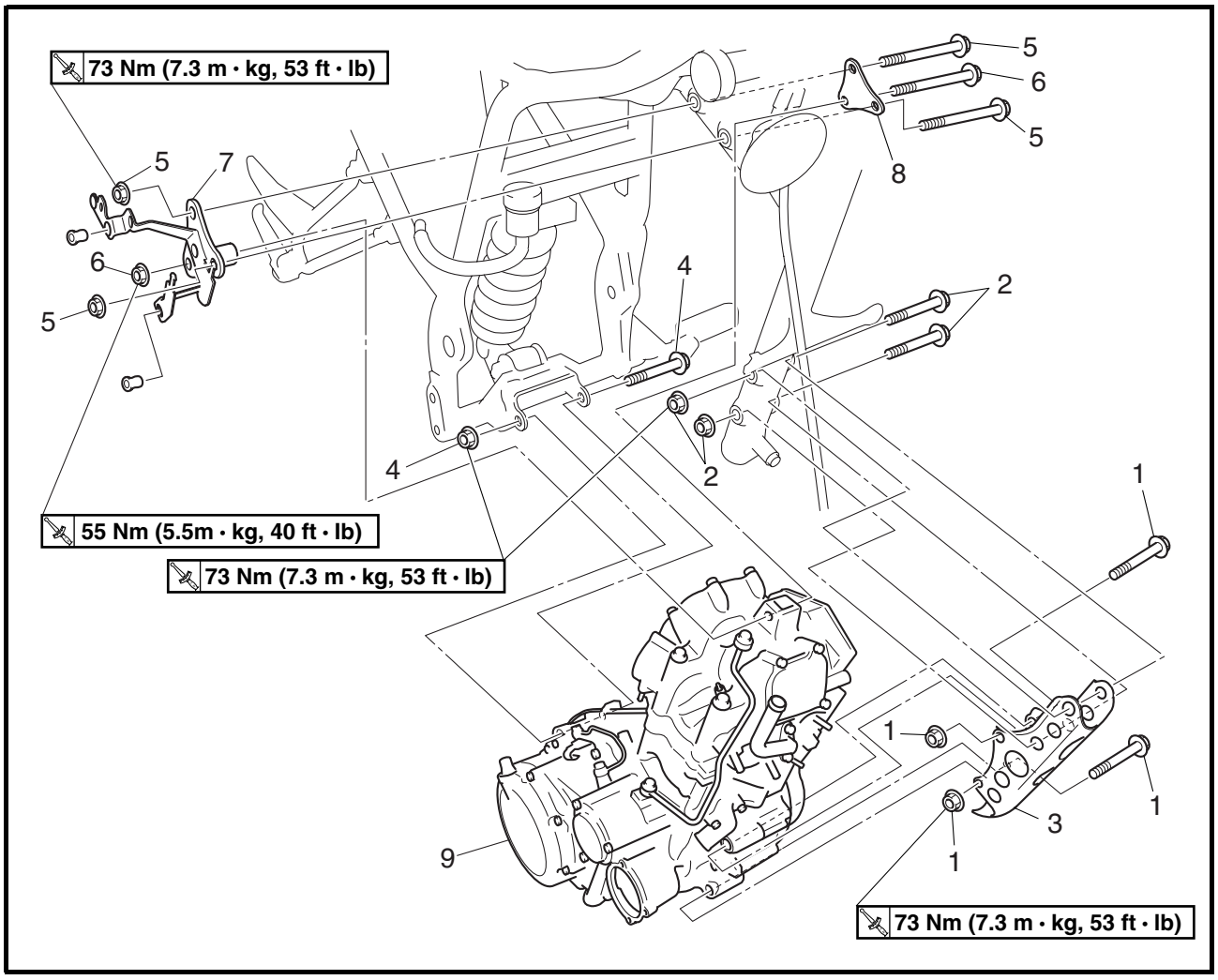

Order	Job/Part	Q'ty	Remarks
7	Engine upper bracket (right)	1	
8	Engine upper bracket (left)	1	
9	Engine	1	**NOTE:** Remove the engine from the right side of the motorcycle. — Refer to "INSTALLING THE ENGINE".
			For installation, reverse the removal procedure.

http://manuals.magnamaniac.com

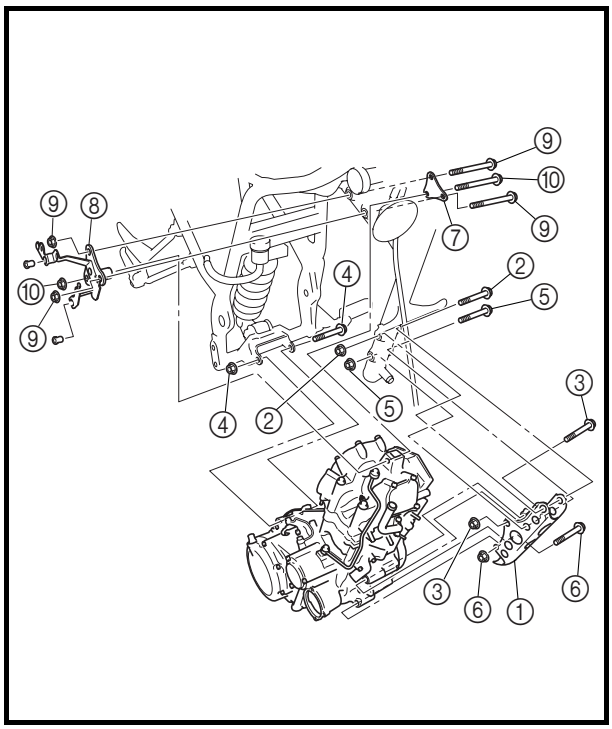

EAS00192
INSTALLING THE ENGINE

1. Install:
   - engine front bracket ①
   - engine front bracket bolt/nut ②
   - engine front mounting bolt/nut ③
   - engine rear mounting bolt/nut ④
   - engine front bracket bolt/nut ⑤
   - engine front mounting bolt/nut ⑥
   - engine upper bracket (left) ⑦
   - engine upper bracket (right) ⑧
   - engine upper bracket bolts/nuts ⑨
   - engine upper mounting bolt/nut ⑩

NOTE:
Do not fully tighten the bolts.

2. Tighten:
   - engine front bracket bolts/nuts ②, ⑤
     73 Nm (7.3 m · kg, 53 ft · lb)
   - engine front mounting bolts/nuts ③, ⑥
     73 Nm (7.3 m · kg, 53 ft · lb)
   - engine rear mounting bolt/nut ④
     73 Nm (7.3 m · kg, 53 ft · lb)
   - engine upper bracket bolts/nuts ⑨
     73 Nm (7.3 m · kg, 53 ft · lb)
   - engine upper mounting bolt/nut ⑩
     55 Nm (5.5 m · kg, 40 ft · lb)

http://manuals.magnamaniac.com

EAS00221
CYLINDER HEAD

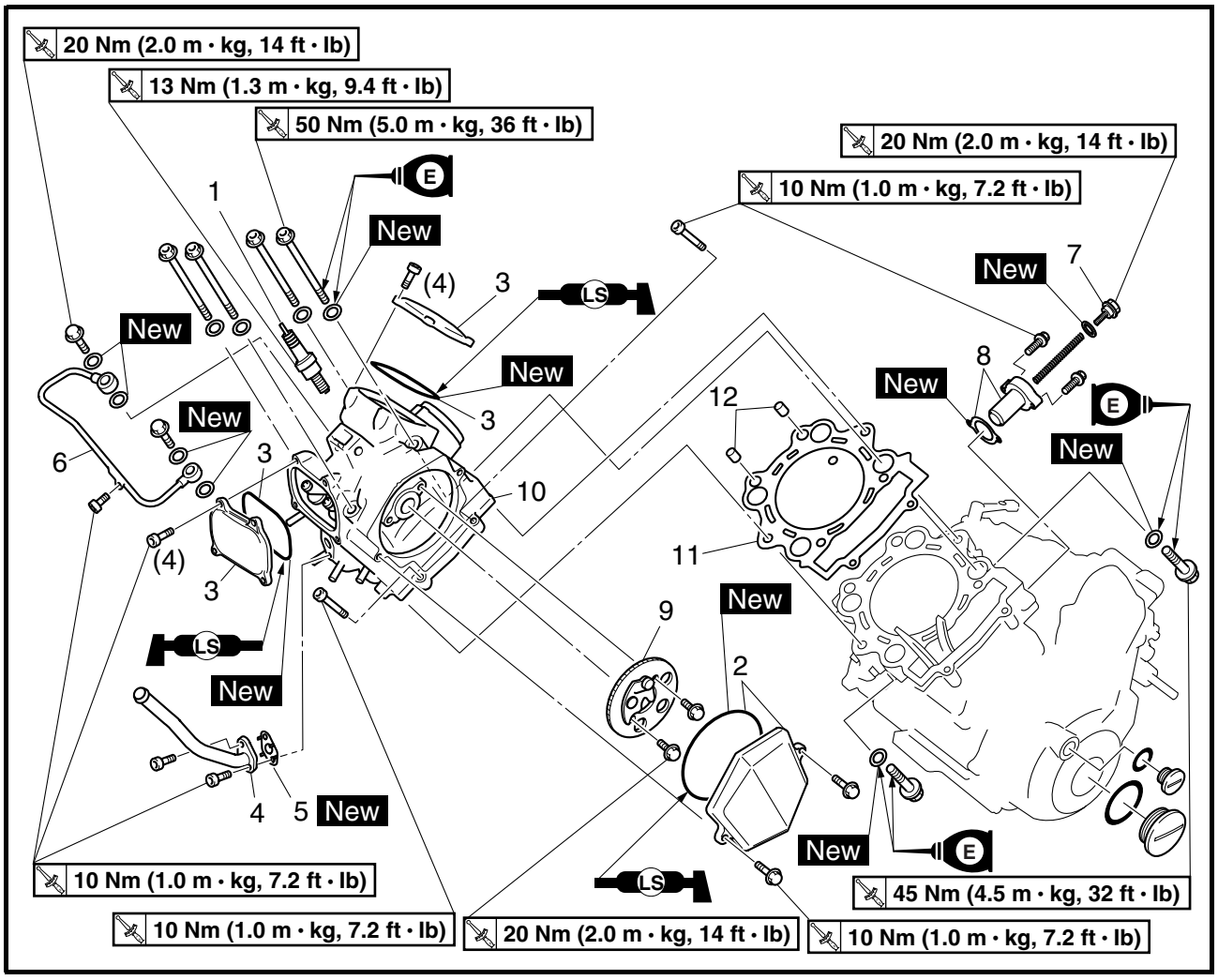

Order	Job/Part	Q'ty	Remarks
	Removing the cylinder head		Remove the parts in the order listed.
	Engine		Refer to "ENGINE REMOVAL".
	Timing mark accessing screw/crankshaft end accessing screw		Refer to "ADJUSTING THE VALVE CLEARANCE" in chapter 3.
1	Spark plug	1	
2	Camshaft sprocket cover/O-ring	1/1	
3	Tappet cover/O-ring	2/2	
4	Air cut-off valve outlet pipe	1	
5	Gasket	1	
6	Oil delivery pipe 1	1	
7	Timing chain tensioner cap bolt	1	Refer to "REMOVING THE CYLINDER HEAD" and "INSTALLING THE CYLINDER HEAD".
8	Timing chain tensioner/gasket	1/1	
9	Camshaft sprocket	1	
10	Cylinder head	1	

http://manuals.magnamaniac.com

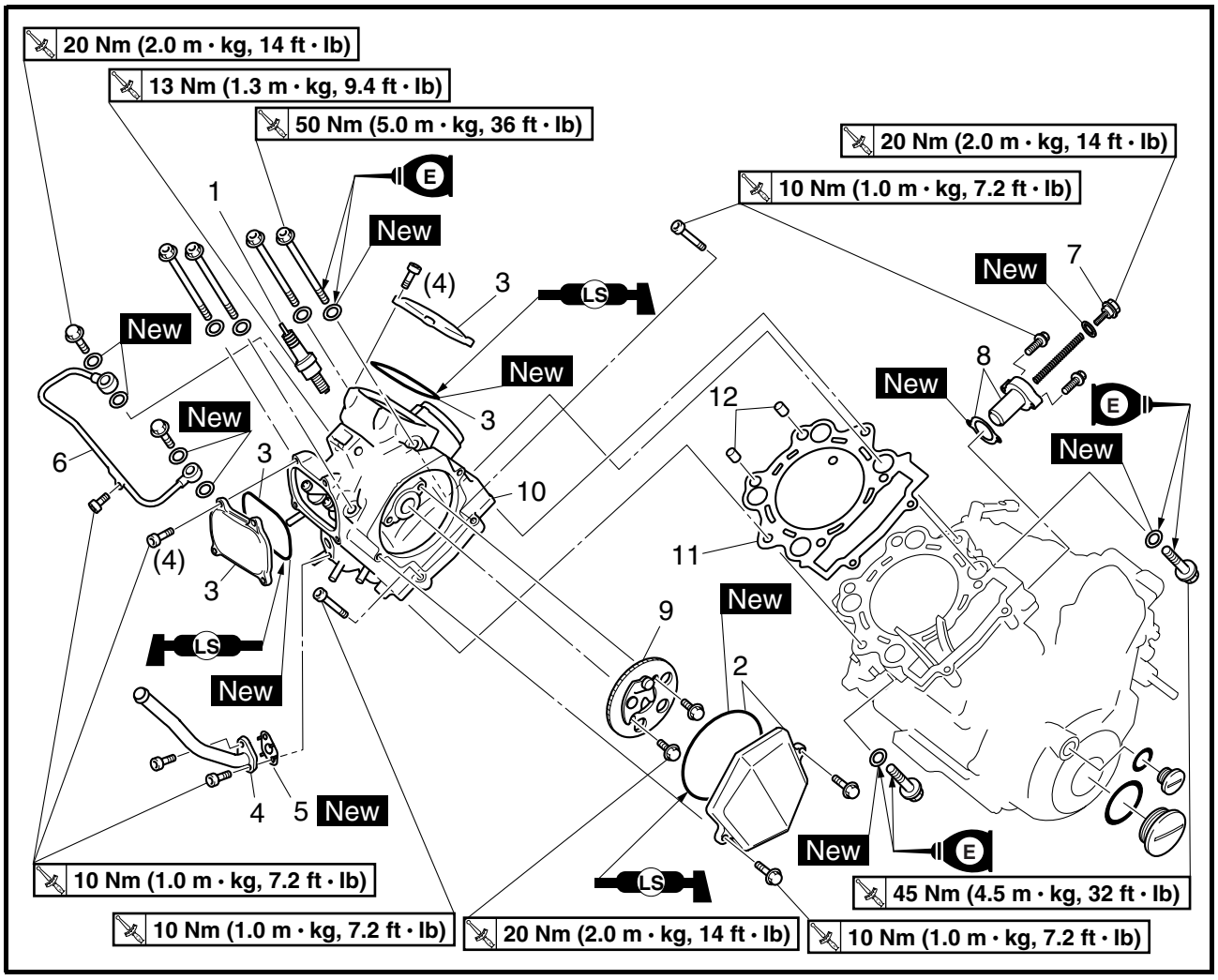

Order	Job/Part	Q'ty	Remarks
11	Cylinder head gasket	1	
12	Dowel pin	2	
			For installation, reverse the removal procedure.

http://manuals.magnamaniac.com

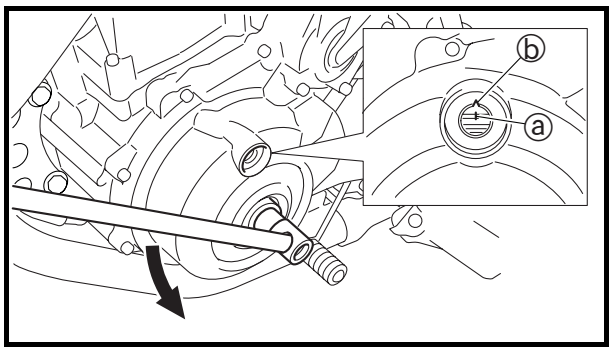

EAS00225
REMOVING THE CYLINDER HEAD

1. Align:
   - "I" mark ⓐ on the A.C. magneto rotor (with the stationary pointer ⓑ on the A.C. magneto cover)

▼▼▼▼▼▼▼▼▼▼▼▼▼▼▼▼▼▼▼▼▼▼▼▼▼▼▼▼▼▼▼▼▼▼

a. Turn the crankshaft counterclockwise.
b. When the piston is at top dead center (TDC) on the compression stroke, align the "I" mark ⓒ on the camshaft sprocket with the stationary pointer ⓓ on the cylinder head.

▲▲▲▲▲▲▲▲▲▲▲▲▲▲▲▲▲▲▲▲▲▲▲▲▲▲▲▲▲▲▲▲▲▲

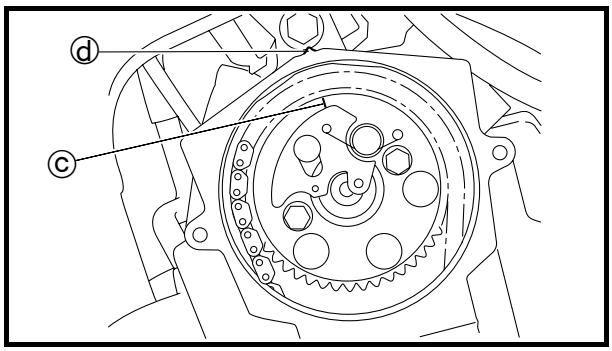

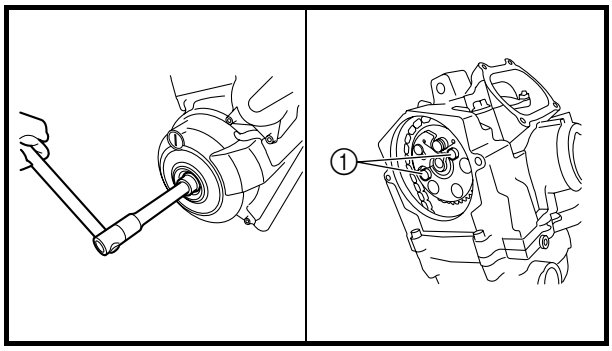

2. Loosen:
   - camshaft sprocket bolts ①

NOTE:
While holding the A.C. magneto rotor nut with a wrench, remove the bolt.

3. Loosen:
   - timing chain tensioner cap bolt
4. Remove:
   - timing chain tensioner (along with the gasket)
   - camshaft sprocket
   - timing chain

NOTE:
To prevent the timing chain from falling into the crankcase, fasten it with a wire.

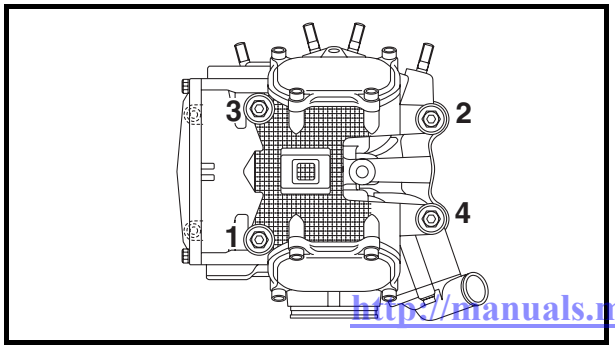

5. Remove:
   - cylinder head

NOTE:
- Loosen the bolts in the proper sequence as shown.
- Loosen each bolt 1/2 of a turn at a time. After all of the bolts are fully loosened, remove them.

http://manuals.magnamaniac.com

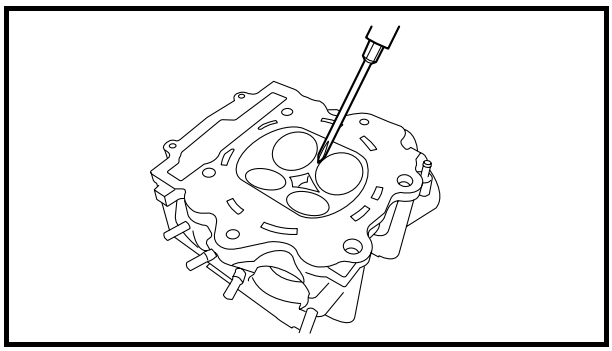

EAS00229
CHECKING THE CYLINDER HEAD

1. Eliminate:
   - combustion chamber carbon deposits (with a rounded scraper)

NOTE:
Do not use a sharp instrument to avoid damaging or scratching:
- spark plug bore threads
- valve seats

2. Check:
   - cylinder head
     Damage/scratches → Replace.
   - cylinder head water jacket
     Mineral deposits/rust → Eliminate.

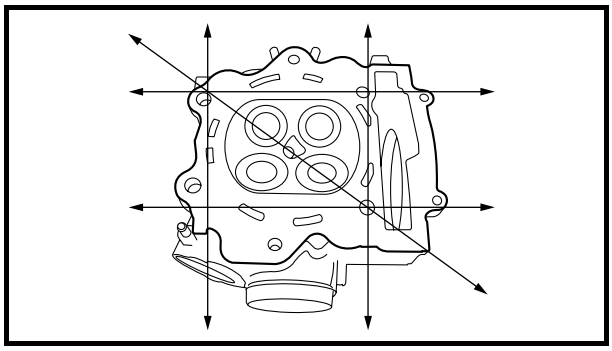

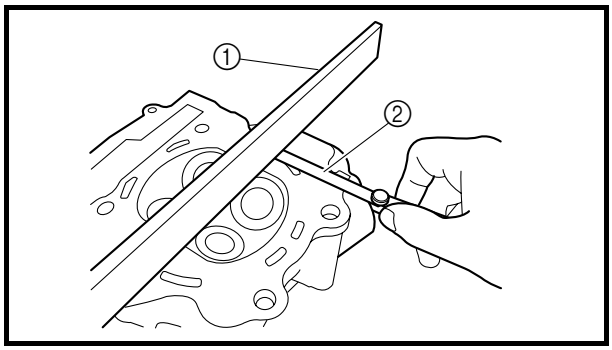

3. Measure:
   - cylinder head warpage
     Out of specification → Resurface the cylinder head.

Maximum cylinder head warpage
0.03 mm (0.0012 in)

▼▼▼▼▼▼▼▼▼▼▼▼▼▼▼▼▼▼▼▼▼▼▼▼▼▼▼▼▼▼▼▼

a. Place a straightedge ① and a thickness gauge ② across the cylinder head.
b. Measure the warpage.
c. If the limit is exceeded, resurface the cylinder head as follows.
d. Place 400 ~ 600 grit wet sandpaper on the surface plate and resurface the cylinder head using a figure-eight sanding pattern.

NOTE:
To ensure an even surface, rotate the cylinder head several times.

▲▲▲▲▲▲▲▲▲▲▲▲▲▲▲▲▲▲▲▲▲▲▲▲▲▲▲▲▲▲▲▲

http://manuals.magnamaniac.com

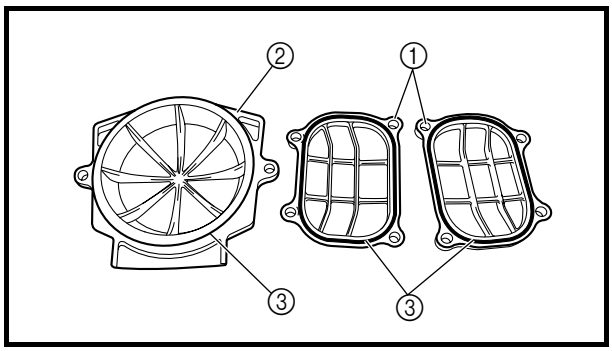

EAS00212
CHECKING THE TAPPET COVERS AND CAMSHAFT SPROCKET COVER

1. Check:
   - tappet covers ①
   - camshaft sprocket cover ②
   - O-rings ③
     Damage/wear → Replace the defective part(s).

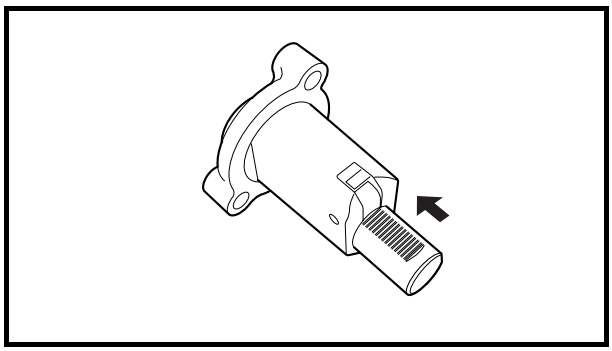

EAS00210
CHECKING THE TIMING CHAIN TENSIONER

1. Check:
   - timing chain tensioner
     Cracks/damage → Replace.
2. Check:
   - one-way cam operation
     Rough movement → Replace the timing chain tensioner housing.
3. Check:
   - timing chain tensioner cap bolt
   - copper washer New
   - spring
   - one-way cam
   - gasket New
   - timing chain tensioner rod
     Damage/wear → Replace the defective part(s).

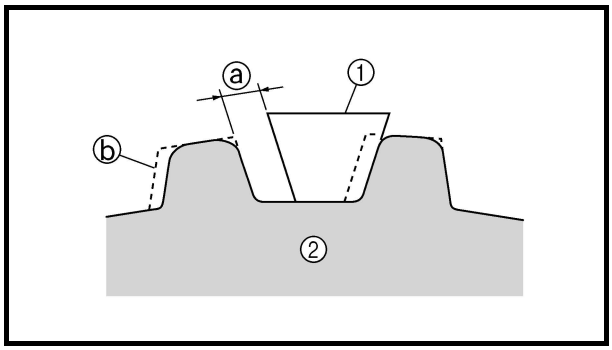

CHECKING THE CAMSHAFT SPROCKET

1. Check:
   - camshaft sprocket
     Wear/damage → Replace the camshaft sprocket and timing chain as a set.

ⓐ 1/4 of a tooth
ⓑ Correct
① Roller
② Sprocket

EAS00231
INSTALLING THE CYLINDER HEAD

1. Install:
   - dowel pins
   - cylinder head gasket New

http://manuals.magnamaniac.com

2. Install:
   - cylinder head
   - washers New
   - cylinder head bolts

NOTE:
- Lubricate the cylinder head bolt threads and muting surface with engine oil.
- Install the washers with their blunt surface facing the bolt seat.

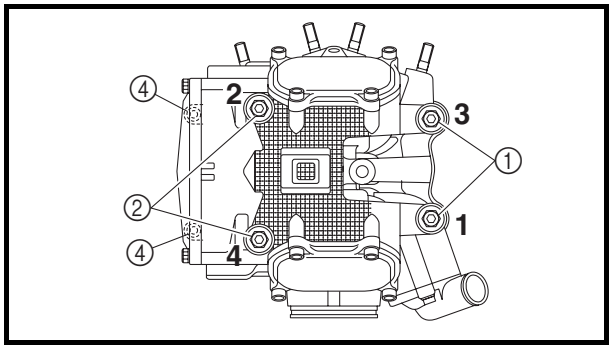

3. Tighten:
   - cylinder head bolts ① ℓ = 135 mm (5.31 in)
     50 Nm (5.0 m · kg, 36 ft · lb)
   - cylinder head bolts ② ℓ = 145 mm (5.71 in)
     50 Nm (5.0 m · kg, 36 ft · lb)
   - cylinder head bolts ③
     45 Nm (4.5 m · kg, 32 ft · lb)
   - cylinder head bolts ④
     10 Nm (1.0 m · kg, 7.2 ft · lb)

NOTE:
Tighten the cylinder head bolts in the proper tightening sequence as shown and torque them in two stages.

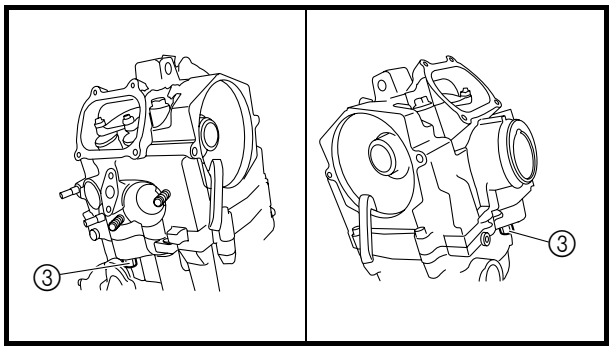

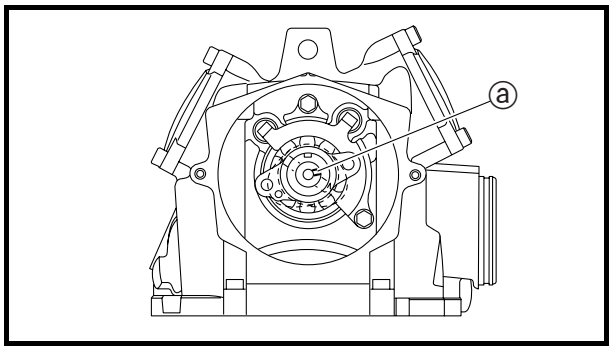

4. Install:
   - camshaft sprocket
     (onto the camshaft)

NOTE:
Make sure that the projection ⓐ on the decompressor lever is in the position shown in the illustration.

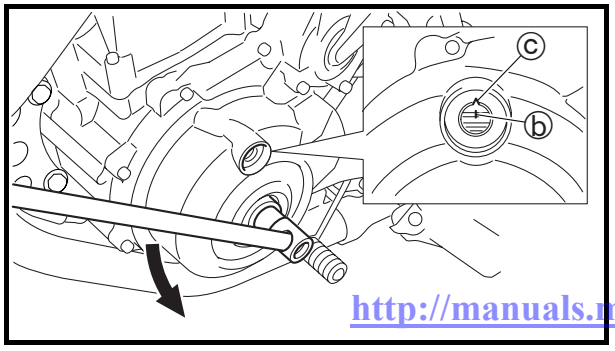

▼▼▼▼▼▼▼▼▼▼▼▼▼▼▼▼▼▼▼▼▼▼▼▼▼▼▼▼▼▼▼▼

a. Turn the primary pulley counterclockwise.
b. Align the "I" mark ⓑ on the A.C. magneto rotor with the stationary pointer ⓒ on the A.C. magneto cover.

http://manuals.magnamaniac.com

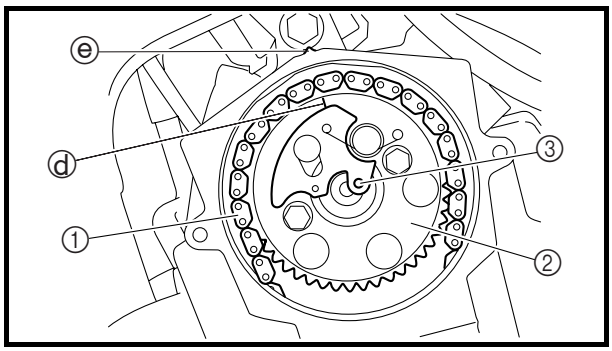

c. Install the timing chain ① onto the camshaft sprocket ②, then the camshaft sprocket onto the camshaft, and then finger tighten the camshaft sprocket bolts.

NOTE:

To install the camshaft sprocket sprocket, install the projection ③ on the camshaft sprocket into the slot ⓐ in the decompression lever.

d. Make sure the "I" mark ⓓ on the camshaft sprocket with the stationary pointer ⓔ on the cylinder head.

NOTE:

- When installing the camshaft sprocket, be sure to keep the timing chain as tight as possible at the exhaust end of the chain.
- Align the projection on the camshaft with the slot in the camshaft sprocket.

CAUTION:

Do not turn the crankshaft when installing the camshaft to avoid damage or improper valve timing.

e. Remove the wire from the timing chain.

▲▲▲▲▲▲▲▲▲▲▲▲▲▲▲▲▲▲▲▲▲▲▲▲▲▲▲▲▲▲

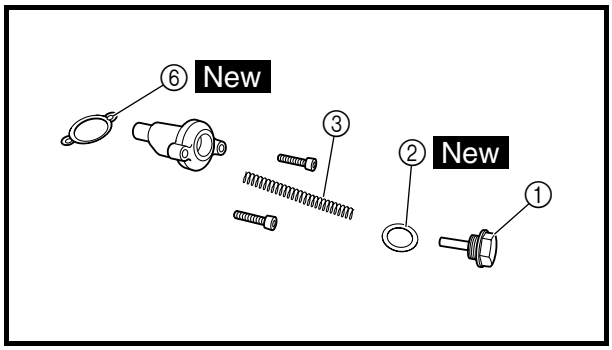

5. Install:
   - timing chain tensioner

▼▼▼▼▼▼▼▼▼▼▼▼▼▼▼▼▼▼▼▼▼▼▼▼▼▼▼▼▼▼

a. Remove the timing chain tensioner cap bolt ①, copper washer ② and spring ③.
b. Release the timing chain tensioner one-way cam ④ and push the timing chain tensioner rod ⑤ all the way into the timing chain tensioner housing.
c. Install the timing chain tensioner and gasket ⑥ onto the cylinder.

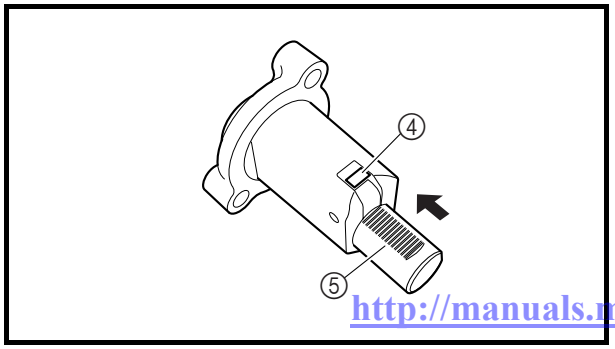

	Timing chain tensioner bolt 10 Nm (1.0 m · kg, 7.2 ft · lb)

NOTE:

Install the gasket with its beaded side facing the timing chain tensioner end.

http://manuals.magnamaniac.com

d. Install the spring and timing chain tensioner cap bolt.

	Timing chain tensioner cap bolt 20 Nm (2.0 m · kg, 14 ft · lb)

▲▲▲▲▲▲▲▲▲▲▲▲▲▲▲▲▲▲▲▲▲▲▲▲▲▲▲▲▲▲▲▲

6. Turn:
   - crankshaft
     (several turns counterclockwise)
7. Check:
   - "I" mark ⓐ

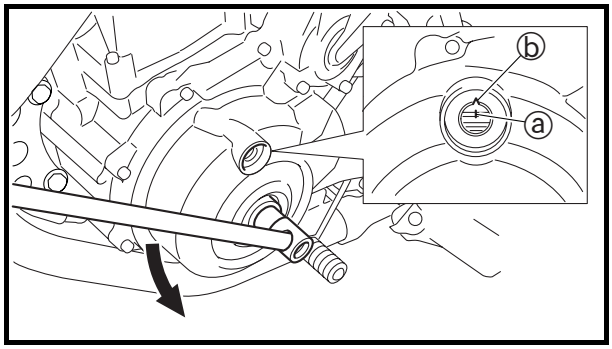

NOTE:
Check that the "I" mark on the A.C. magneto rotor is aligned with the stationary pointer ⓑ on the A.C. magneto cover.

   - "I" mark ⓒ

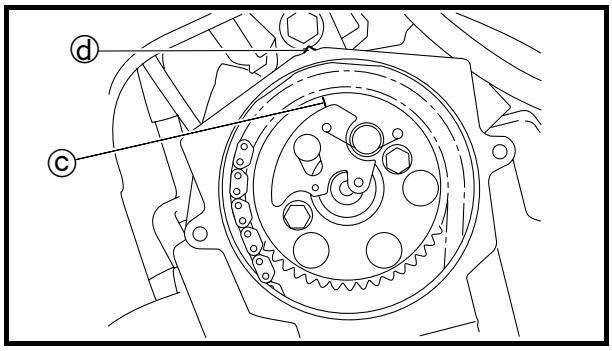

NOTE:
Check that the "I" mark on the camshaft sprocket is aligned with the stationary pointer ⓓ on the cylinder head.

     Out of alignment → Correct.
     Repeat steps 4-7, if necessary.
8. Tighten:
   - camshaft sprocket bolts

	20 Nm (2.0 m · kg, 14 ft · lb)

CAUTION:
Be sure to tighten the camshaft sprocket bolts to the specified torque to avoid the possibility of the bolts coming loose and damaging the engine.

9. Measure:
   - valve clearance
     Out of specification → Adjust.
     Refer to "ADJUSTING THE VALVE CLEARANCE" in chapter 3.

http://manuals.magnamaniac.com

ROCKER ARMS AND CAMSHAFT

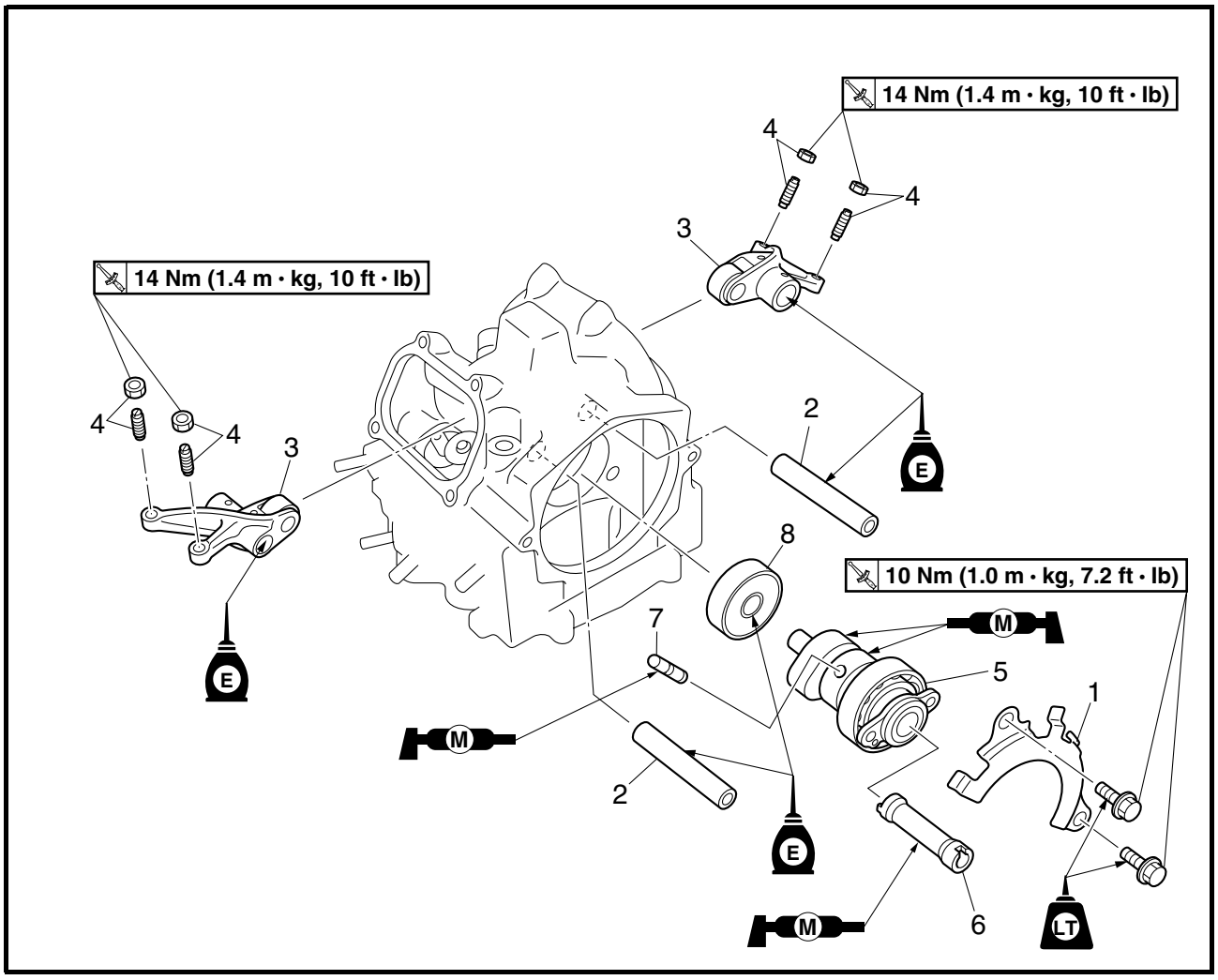

Order	Job/Part	Q'ty	Remarks
	Removing the rocker arms and camshaft		Remove the parts in the order listed.
	Cylinder head		Refer to "CYLINDER HEAD".
1	Bearing retainer	1	Refer to "REMOVING THE ROCKER ARMS AND CAMSHAFT" and "INSTALLING THE CAMSHAFT AND ROCKER ARMS".
2	Rocker arm shaft	2	
3	Rocker arm	2	
4	Locknut/valve adjuster	4/4	
5	Camshaft	1	**CAUTION:** **Do not disassemble the camshaft assembly.**
6	Decompressor lever	1	

http://manuals.magnamaniac.com

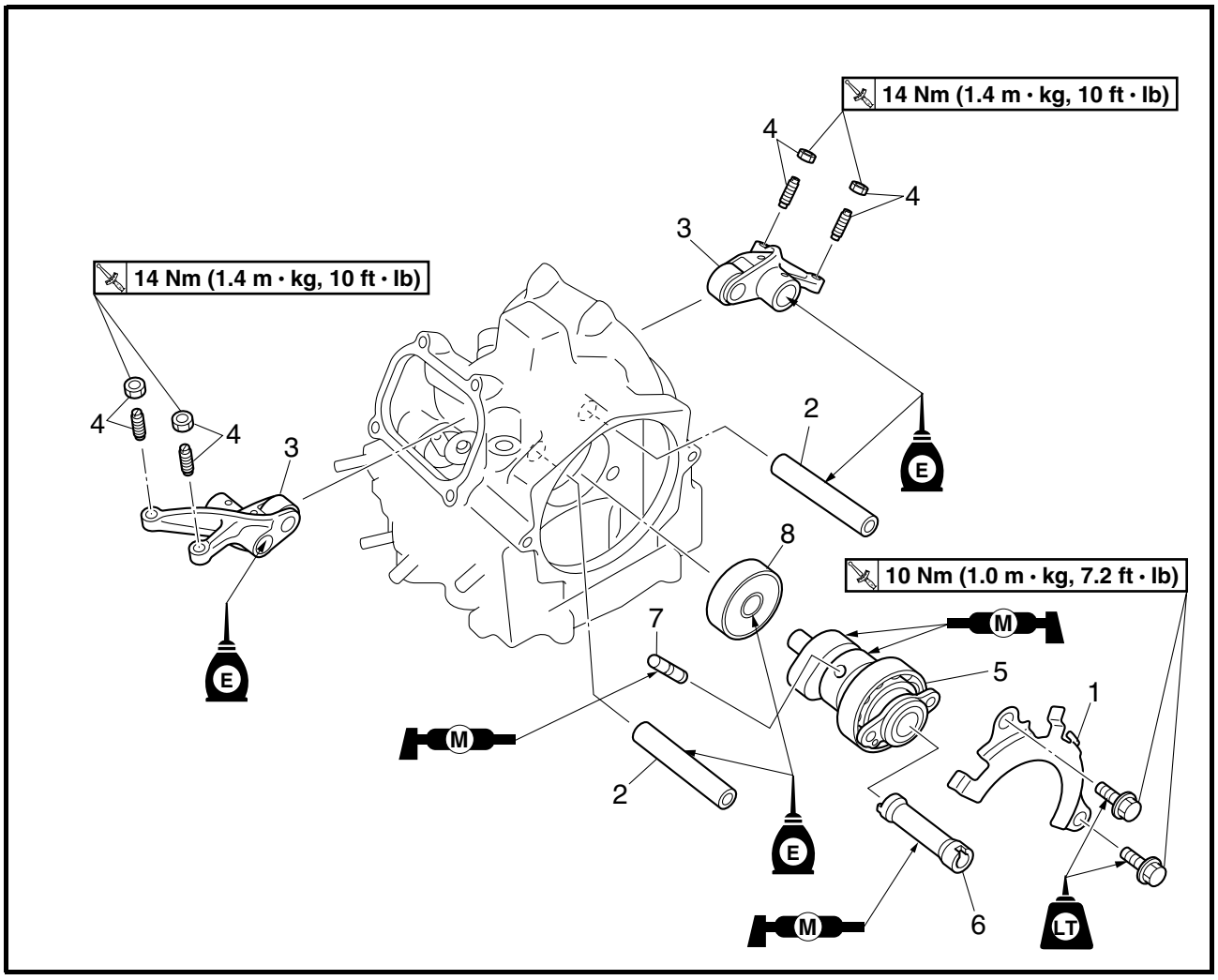

Order	Job/Part	Q'ty	Remarks
7	Decompressor lever pin	1	Refer to "REMOVING THE ROCKER ARMS AND CAMSHAFT" and "INSTALLING THE CAMSHAFT AND ROCKER ARMS". For installation, reverse the removal procedure.
8	Bearing	1	

http://manuals.magnamaniac.com

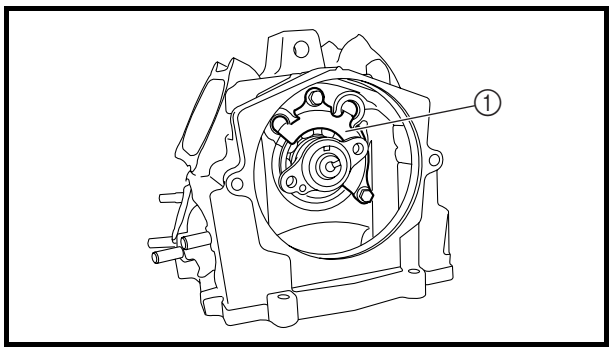

EAS00202
REMOVING THE ROCKER ARMS AND CAMSHAFT

1. Loosen:
   - locknuts
   - adjusting screws
2. Remove:
   - camshaft retainer ①

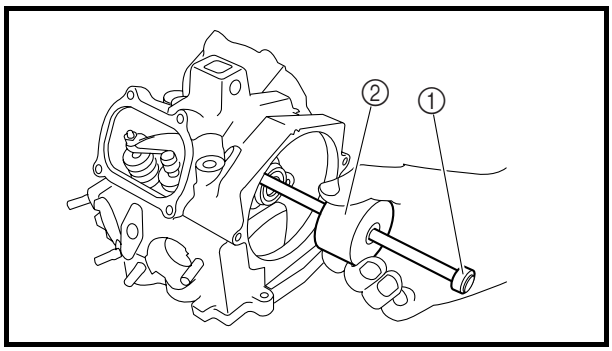

3. Remove:
   - intake rocker arm shaft
   - exhaust rocker arm shaft
   - intake rocker arm
   - exhaust rocker arm

NOTE:
Remove the rocker arm shafts with the slide hammer bolt ① and weight ②.

Slide hammer bolt
90890-01083
Weight
90890-01084

4. Remove:
   - camshaft

EAS00205
CHECKING THE CAMSHAFT

1. Check:
   - camshaft lobes
     Blue discoloration/pitting/scratches → Replace the camshaft and camshaft sprocket.

http://manuals.magnamaniac.com

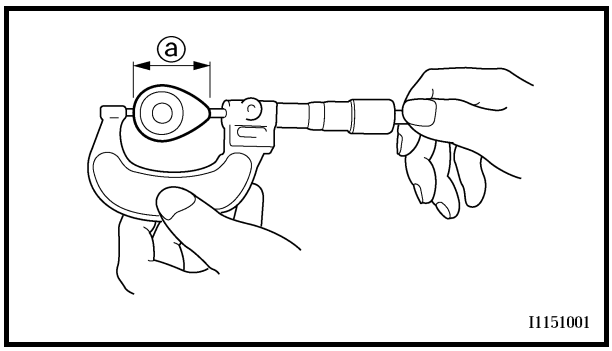

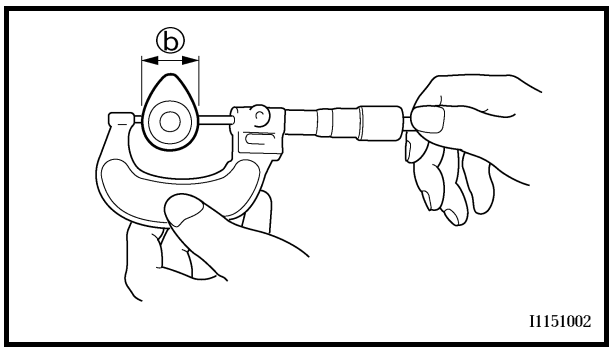

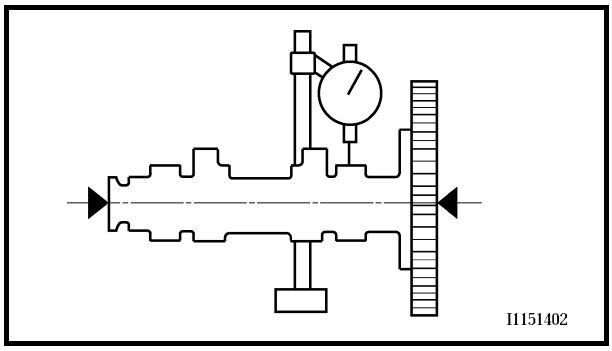

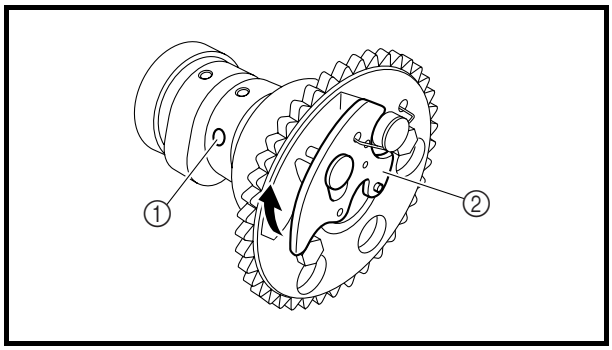

2. Measure:
   - camshaft lobe dimensions ⓐ and ⓑ
     Out of specification → Replace the camshaft.

Camshaft lobe dimensions
Intake
ⓐ 43.488 ~ 43.588 mm (1.7121 ~ 1.7161 in)
<Limit>: 43.388 mm (1.7062 in)
ⓑ 36.959 ~ 37.059 mm (1.4551 ~ 1.4590 in)
<Limit>: 36.840 mm (1.4504 in)
Exhaust
ⓐ 43.129 ~ 43.229 mm (1.6980 ~ 1.7019 in)
<Limit>: 42.983 mm (1.6922 in)
ⓑ 37.007 ~ 37.107 mm (1.4570 ~ 1.4609 in)
<Limit>: 36.886 mm (1.4522 in)

3. Measure:
   - camshaft runout
     Out of specification → Replace.

Camshaft runout limit
0.040 mm (0.0016 in)

CHECKING THE DECOMPRESSION SYSTEM

1. Check:
   - decompression system

▼▼▼▼▼▼▼▼▼▼▼▼▼▼▼▼▼▼▼▼▼▼▼▼▼▼▼▼▼▼▼▼▼▼

a. Check the decompression system with the camshaft sprocket installed on and the decompressor pin installed in the camshaft.
b. Check that the decompressor lever pin ① projects from the camshaft.
c. Check that the decompressor cam ② moves smoothly.

▲▲▲▲▲▲▲▲▲▲▲▲▲▲▲▲▲▲▲▲▲▲▲▲▲▲▲▲▲▲▲▲▲▲

http://manuals.magnamaniac.com

EAS00206
CHECKING THE ROCKER ARMS AND ROCKER ARM SHAFTS

The following procedure applies to both of the rocker arms and rocker arm shafts.

1. Check:
   - rocker arm
     Damage/wear → Replace.
2. Check:
   - rocker arm shaft
     Blue discoloration/excessive wear/pitting/scratches → Replace or check the lubrication system.

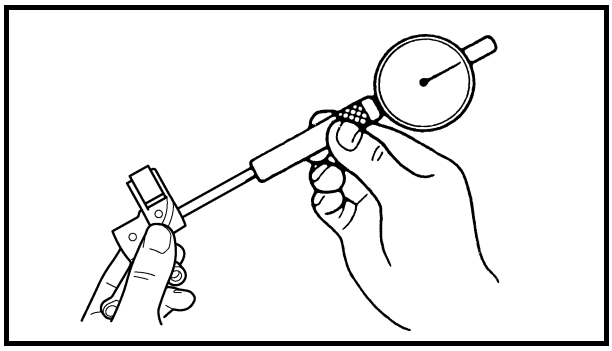

3. Measure:
   - rocker arm inside diameter
     Out of specification → Replace.

Rocker arm inside diameter
12.000 ~ 12.018 mm
(0.4724 ~ 0.4731 in)
<Limit>: 12.036 mm (0.4739 in)

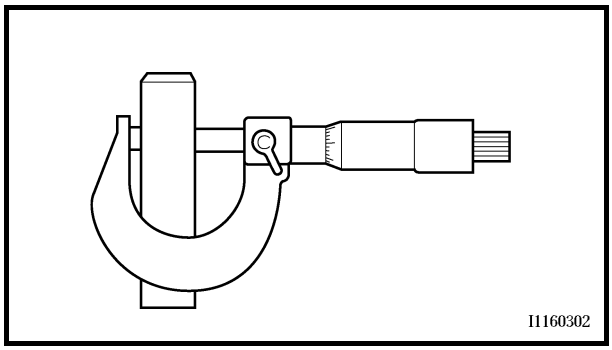

4. Measure:
   - rocker arm shaft outside diameter
     Out of specification → Replace.

Rocker arm shaft outside diameter
11.981 ~ 11.991 mm
(0.4717 ~ 0.4721 in)
<Limit>: 11.955 mm (0.4707 in)

http://manuals.magnamaniac.com

5. Calculate:
   • rocker-arm-to-rocker-arm-shaft clearance

NOTE:
Calculate the clearance by subtracting the rocker arm shaft outside diameter from the rocker arm inside diameter.

Above 0.081 mm (0.0032 in) → Replace the defective part(s).

Rocker-arm-to-rocker-arm-shaft clearance
0.009 ~ 0.037 mm
(0.0004 ~ 0.0015 in)
<Limit>: 0.081 mm (0.0032 in)

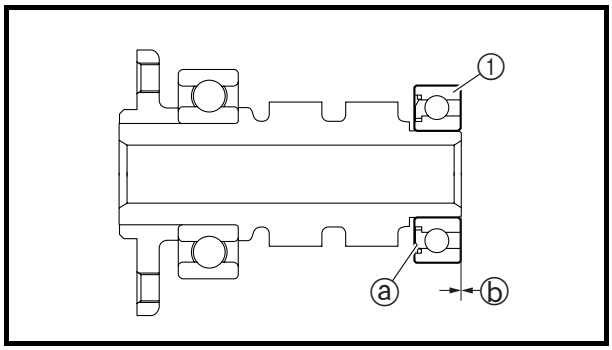

EAS00220
INSTALLING THE CAMSHAFT AND ROCKER ARMS

1. Install:
   • bearing ①
   (onto the camshaft)

NOTE:
• Apply engine oil to the bearing.
• Install the bearing so that the seal is facing ⓐ the camshaft.

Installed depth ⓑ
0 mm (0 in)

2. Lubricate:
   • camshaft
   • decompressor lever pin
   • decompressor lever

Recommended lubricant
Camshaft
Molybdenum disulfide oil
Camshaft bearing
Engine oil

http://manuals.magnamaniac.com

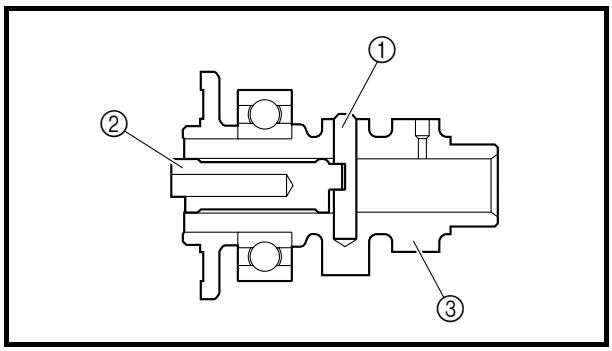

3. Install:
   - decompressor lever pin ①
   - decompressor lever ②

NOTE:
Install the decompressor lever pin ① and decompressor lever ② in the camshaft ③ as shown in the illustration.

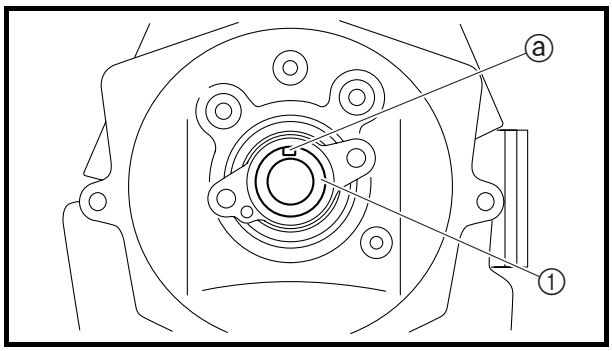

4. Install:
   - camshaft ①

NOTE:
Install the camshaft on the slot ⓐ facing up.

5. Lubricate:
   - rocker arm shafts

	Recommended lubricant **Engine oil**

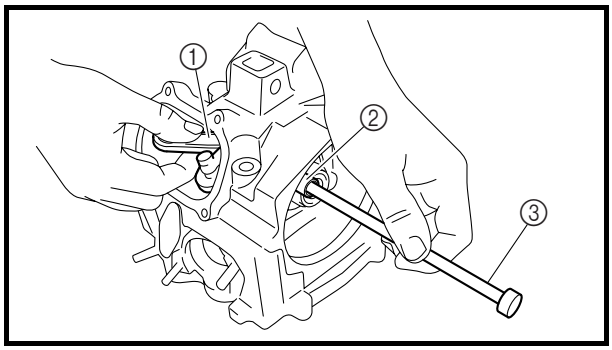

6. Install:
   - exhaust rocker arm ①
   - exhaust rocker arm shaft ②
   - intake rocker arm
   - intake rocker arm shaft

NOTE:
- Use a slide hammer bolt ③ to install the rocker arm shaft.
- Make sure the rocker arm shaft (intake and exhaust) is completely pushed into the cylinder head.

	Slide hammer bolt **90890-01083**

7. Install:
   - camshaft retainer
   - camshaft retainer bolts

10 Nm (1.0 m · kg, 7.2 ft · lb)

http://manuals.magnamaniac.com

EAS00236
VALVES AND VALVE SPRINGS

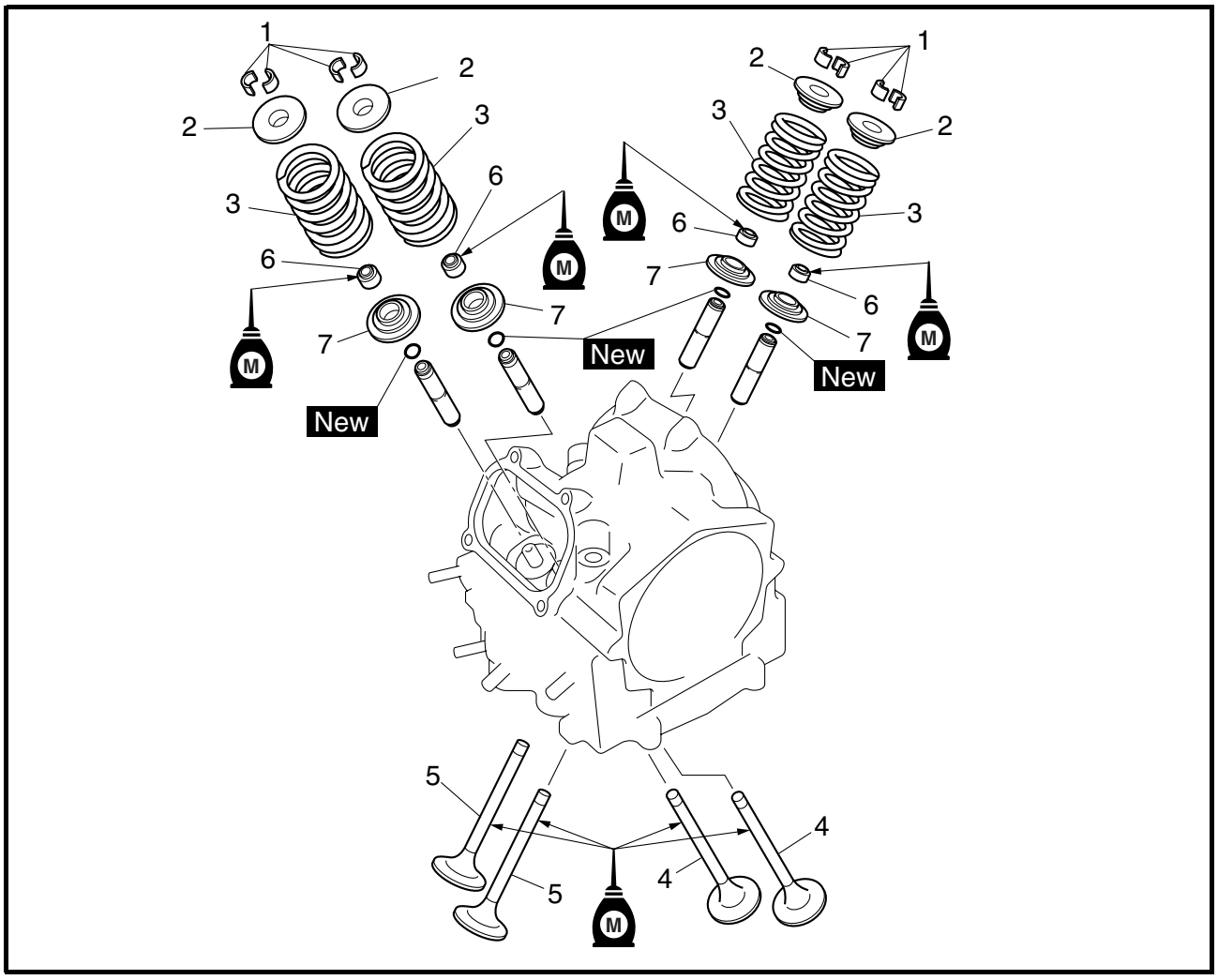

Order	Job/Part	Q'ty	Remarks
	Removing the valves and valve springs		Remove the parts in the order listed.
	Cylinder head		Refer to "CYLINDER HEAD".
	Rocker arms/rocker arm shafts/cam-shaft		Refer to "ROCKER ARMS AND CAM-SHAFT".
1	Valve cotter	8	Refer to "REMOVING THE VALVES" and "INSTALLING THE VALVES".
2	Valve spring retainer	4	
3	Valve spring	4	
4	Exhaust valve	2	
5	Intake valve	2	
6	Valve stem seal	4	
7	Valve spring seat	4	
			For installation, reverse the removal procedure.

http://manuals.magnamaniac.com

EAS00237
REMOVING THE VALVES

The following procedure applies to all of the valves and related components.

NOTE:

Before removing the internal parts of the cylinder head (e.g., valves, valve springs, valve seats), make sure the valves properly seal.

1. Check:
   - valve sealing

     Leakage at the valve seat → Check the valve face, valve seat, and valve seat width. Refer to "CHECKING THE VALVE SEATS".

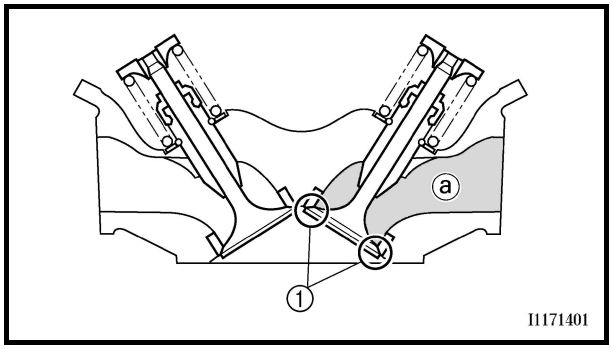

▼▼▼▼▼▼▼▼▼▼▼▼▼▼▼▼▼▼▼▼▼▼▼▼▼▼▼▼▼▼▼▼▼▼

a. Pour a clean solvent ⓐ into the intake and exhaust ports.
b. Check that the valves properly seal.

NOTE:

There should be no leakage at the valve seat ①.

▲▲▲▲▲▲▲▲▲▲▲▲▲▲▲▲▲▲▲▲▲▲▲▲▲▲▲▲▲▲▲▲▲▲

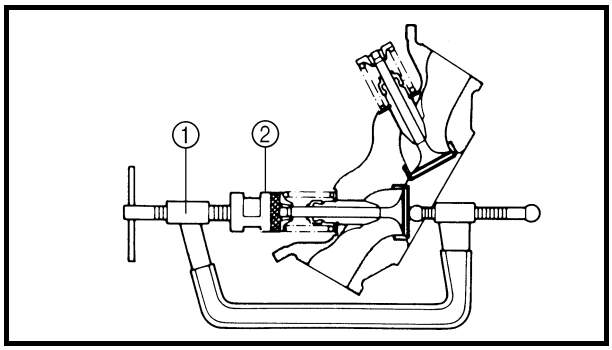

2. Remove:
   - valve cotters

NOTE:

Remove the valve cotters by compressing the valve spring with the valve spring compressor ① and the valve spring compressor attachment ②.

Valve spring compressor
90890-04019
Valve spring compressor attachment
90890-01243

http://manuals.magnamaniac.com

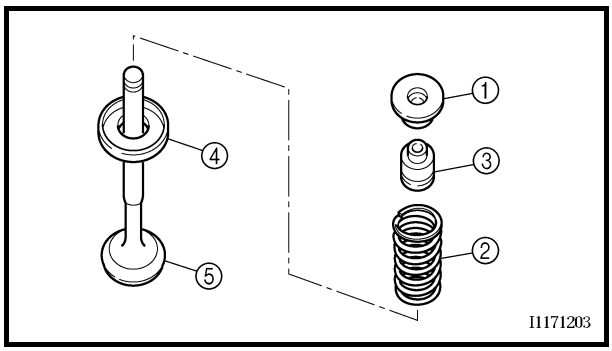

3. Remove:
   - valve spring retainer ①
   - valve spring ②
   - valve stem seal ③
   - valve spring seat ④
   - valve ⑤

NOTE:
Identify the position of each part very carefully so that it can be reinstalled in its original place.

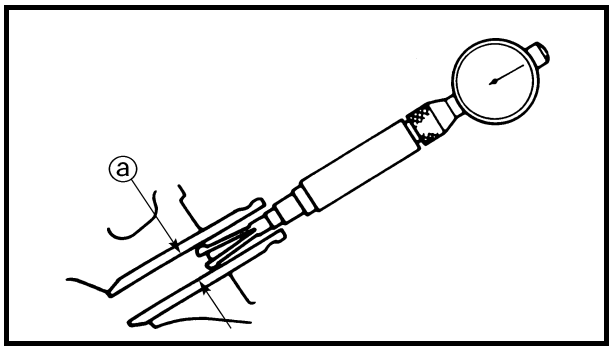

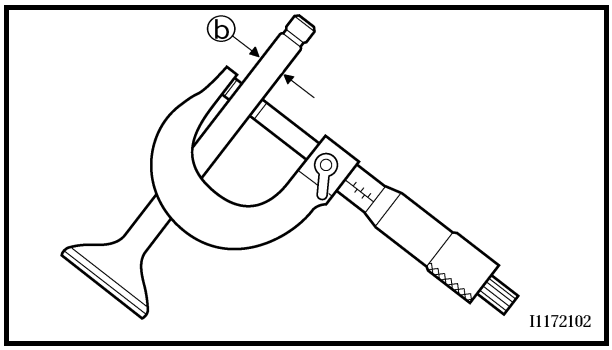

EAS00239
CHECKING THE VALVES AND VALVE GUIDES

The following procedure applies to all of the valves and valve guides.

1. Measure:
   - valve-stem-to-valve-guide clearance

Valve-stem-to-valve-guide clearance = Valve guide inside diameter ⓐ – Valve stem diameter ⓑ

Out of specification → Replace the valve guide.

Valve-stem-to-valve-guide clearance
Intake
0.010 ~ 0.037 mm
(0.0004 ~ 0.0015 in)
<Limit>: 0.08 mm (0.0031 in)
Exhaust
0.025 ~ 0.052 mm
(0.0010 ~ 0.0020 in)
<Limit>: 0.10 mm (0.0039 in)

http://manuals.magnamaniac.com

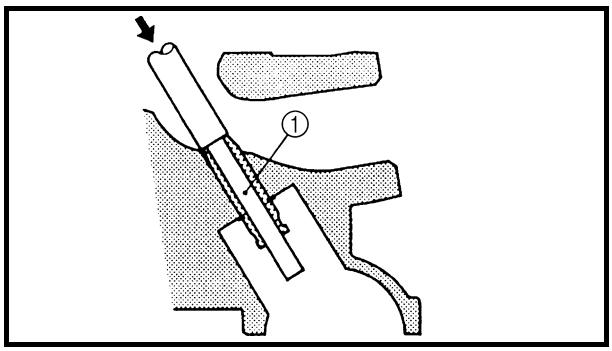

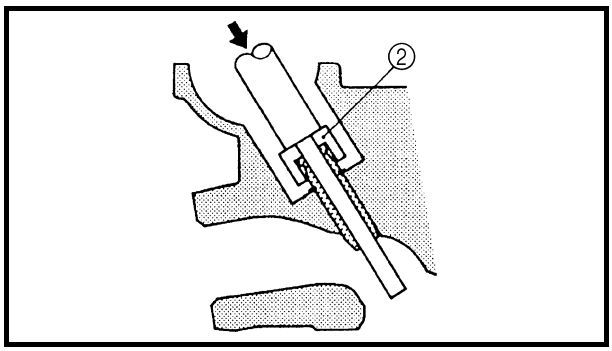

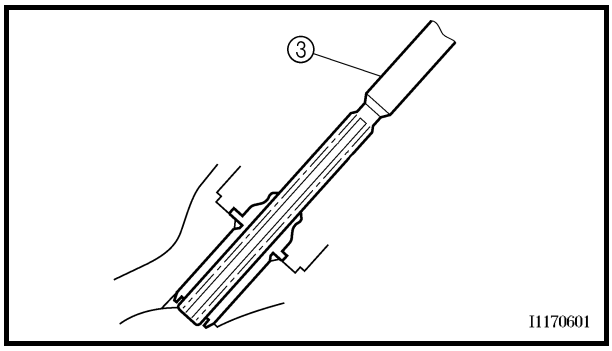

2. Replace:
   - valve guide

NOTE:
To ease valve guide removal and installation, and to maintain the correct fit, heat the cylinder head to 100 °C (212 °F) in an oven.

▼▼▼▼▼▼▼▼▼▼▼▼▼▼▼▼▼▼▼▼▼▼▼▼▼▼▼▼▼▼▼▼▼▼

a. Remove the valve guide with the valve guide remover ①.
b. Install the new valve guide with the valve guide installer ② and valve guide remover ①.
c. After installing the valve guide, bore the valve guide with the valve guide reamer ③ to obtain the proper valve-stem-to-valve-guide clearance.

NOTE:
After replacing the valve guide, reface the valve seat.

Valve guide remover (ø6)
90890-04064
Valve guide installer (ø6)
90890-04065
Valve guide reamer (ø6)
90890-04066

▲▲▲▲▲▲▲▲▲▲▲▲▲▲▲▲▲▲▲▲▲▲▲▲▲▲▲▲▲▲▲▲▲▲

3. Eliminate:
   - carbon deposits
     (from the valve face and valve seat)
4. Check:
   - valve face
     Pitting/wear → Grind the valve face.
   - valve stem end
     Mushroom shape or diameter larger than the body of the valve stem → Replace the valve.

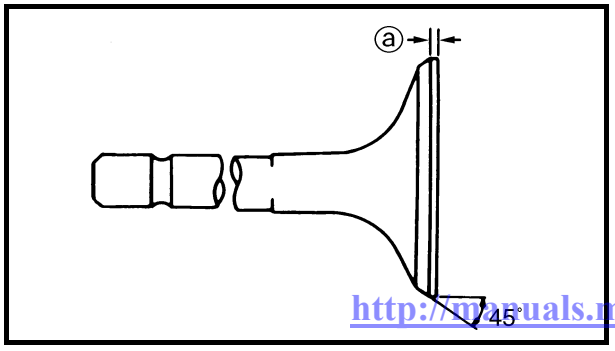

5. Measure:
   - valve margin thickness ⓐ
     Out of specification → Replace the valve.

Valve margin thickness
0.80 ~ 1.20 mm
(0.0315 ~ 0.0472 in)

http://manuals.magnamaniac.com

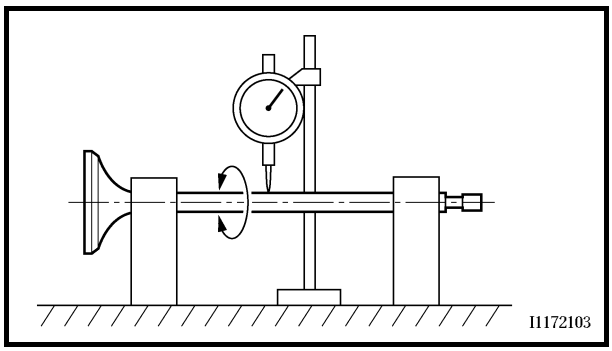

6. Measure:
   • valve stem runout
     Out of specification → Replace the valve.

NOTE:
- When installing a new valve, always replace the valve guide.
- If the valve is removed or replaced, always replace the valve stem seal.

Valve stem runout
0.010 mm (0.0004 in)

EAS00240
CHECKING THE VALVE SEATS

The following procedure applies to all of the valves and valve seats.

1. Eliminate:
   • carbon deposits
     (from the valve face and valve seat)
2. Check:
   • valve seat
     Pitting/wear → Replace the cylinder head.
3. Measure:
   • valve seat width ⓐ
     Out of specification → Replace the cylinder head.

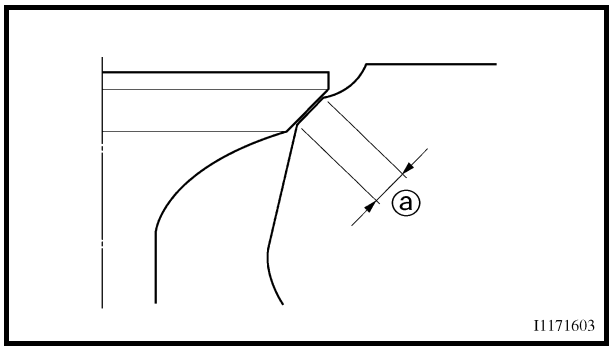

Valve seat width
Intake
1.00 ~ 1.20 mm
(0.0394 ~ 0.0472 in)
Exhaust
1.00 ~ 1.20 mm
(0.0394 ~ 0.0472 in)

▼▼▼▼▼▼▼▼▼▼▼▼▼▼▼▼▼▼▼▼▼▼▼▼▼▼▼▼▼▼▼▼

a. Apply Mechanic's blueing dye (Dykem) onto the valve face.
b. Install the valve into the cylinder head.
c. Press the valve through the valve guide and onto the valve seat to make a clear impression.
d. Measure the valve seat width.

NOTE:
Where the valve seat and valve face contacted one another, the blueing will have been removed.

http://manuals.magnamaniac.com

▲▲▲▲▲▲▲▲▲▲▲▲▲▲▲▲▲▲▲▲▲▲▲▲▲▲▲▲▲▲▲▲

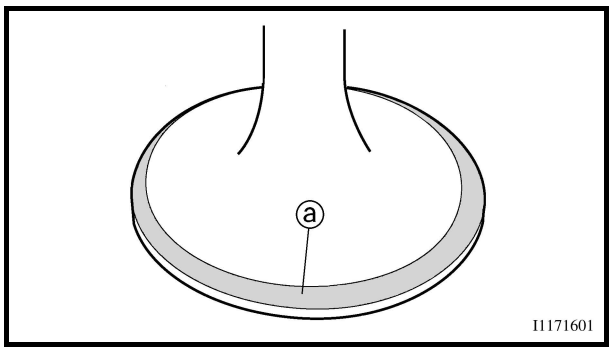

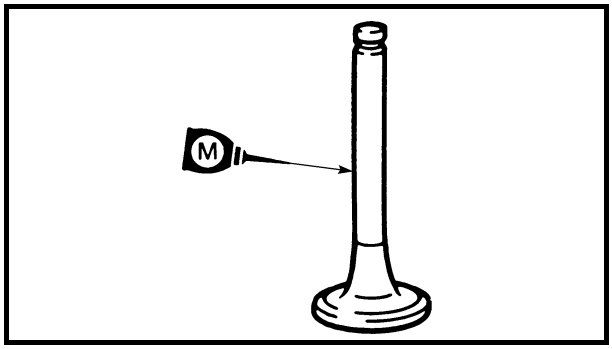

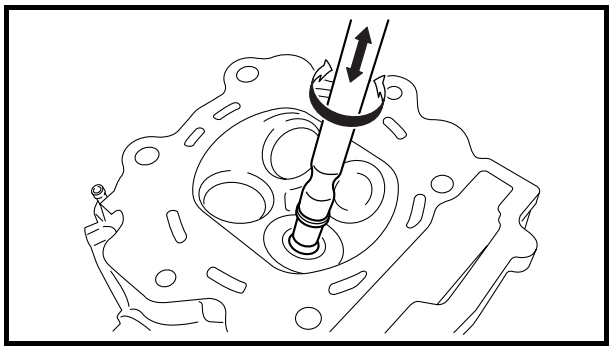

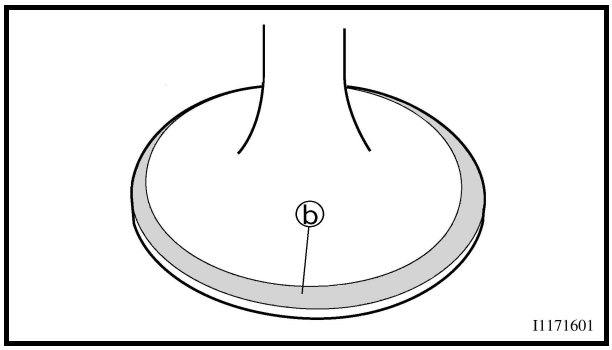

4. Lap:
   - valve face
   - valve seat

NOTE:
After replacing the cylinder head or replacing the valve and valve guide, the valve seat and valve face should be lapped.

▼▼▼▼▼▼▼▼▼▼▼▼▼▼▼▼▼▼▼▼▼▼▼▼▼▼▼▼▼▼▼▼▼▼

a. Apply a coarse lapping compound ⓐ to the valve face.

CAUTION:
Do not let the lapping compound enter the gap between the valve stem and the valve guide.

b. Apply molybdenum disulfide oil onto the valve stem.
c. Install the valve into the cylinder head.
d. Turn the valve until the valve face and valve seat are evenly polished, then clean off all of the lapping compound.

NOTE:
For the best lapping results, lightly tap the valve seat while rotating the valve back and forth between your hands.

e. Apply a fine lapping compound to the valve face and repeat the steps above.
f. After every lapping procedure, be sure to clean off all of the lapping compound from the valve face and valve seat.
g. Apply Mechanic's blueing dye (Dykem) ⓑ onto the valve face.
h. Install the valve into the cylinder head.
i. Press the valve through the valve guide and onto the valve seat to make a clear impression.
j. Measure the valve seat width again. If the valve seat width is out of specification, reface and lap the valve seat.

▲▲▲▲▲▲▲▲▲▲▲▲▲▲▲▲▲▲▲▲▲▲▲▲▲▲▲▲▲▲▲▲▲▲

http://manuals.magnamaniac.com

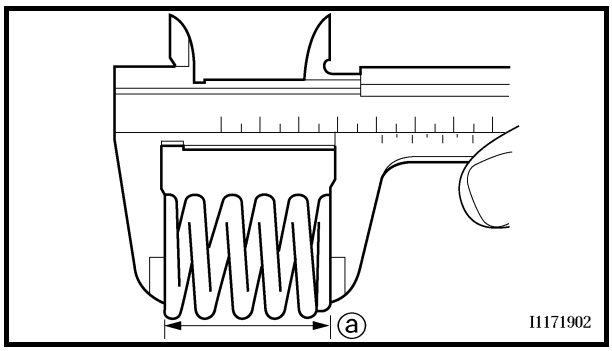

EAS00241
CHECKING THE VALVE SPRINGS
The following procedure applies to all of the valve springs.
1. Measure:
   • valve spring free length ⓐ
   Out of specification → Replace the valve spring.

Valve spring free length
Intake
40.38 mm (1.59 in)
<Limit>: 38.36 mm (1.51 in)
Exhaust
40.38 mm (1.59 in)
<Limit>: 38.36 mm (1.51 in)

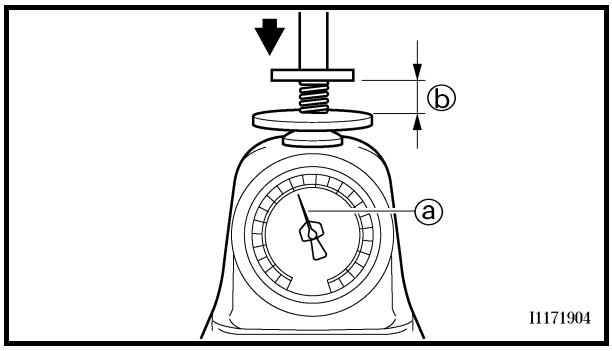

2. Measure:
   • compressed valve spring force ⓐ
   Out of specification → Replace the valve spring.

ⓑ Installed length

Compressed valve spring force (installed)
171 ~ 197 N at 35.00 mm
(17.44 ~ 20.09 kg at 35.00 mm, 38.44 ~ 44.29 lb at 1.38 in)

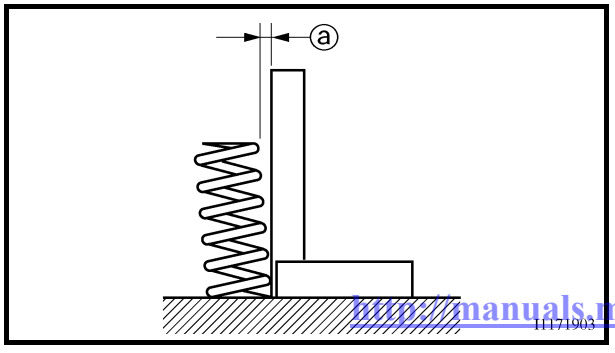

3. Measure:
   • valve spring tilt ⓐ
   Out of specification → Replace the valve spring.

Spring tilt limit
2.5°/1.8 mm (2.5°/0.071 in)

http://manuals.magnamaniac.com

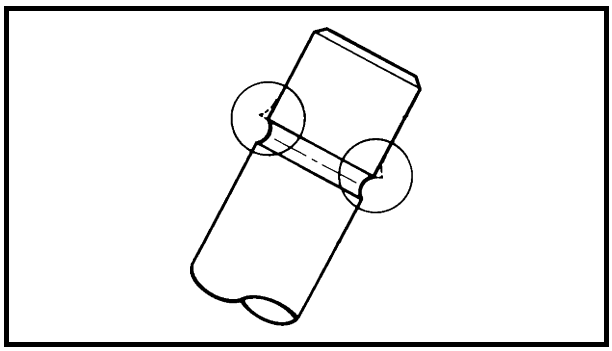

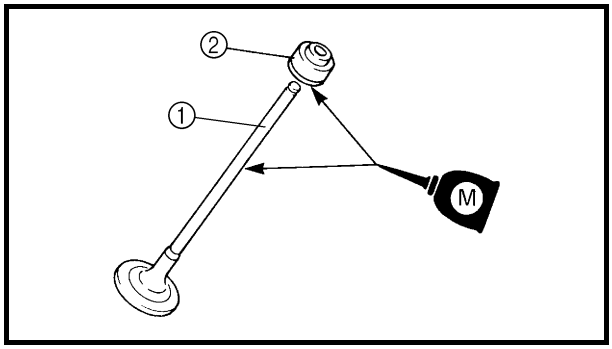

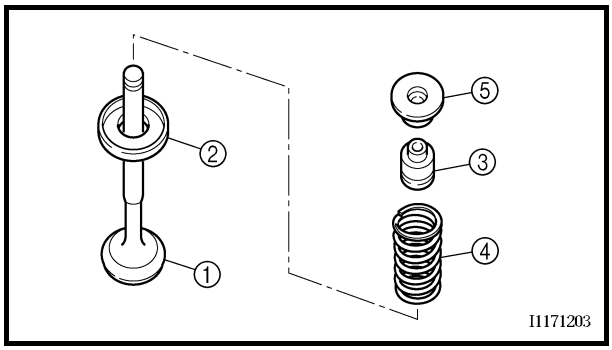

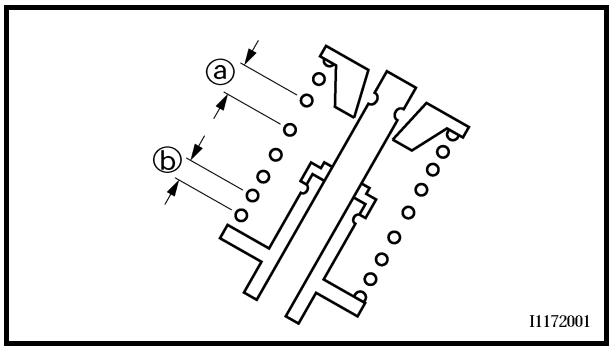

EAS00245
INSTALLING THE VALVES

The following procedure applies to all of the valves and related components.

1. Deburr:
   - valve stem end
     (with an oil stone)
2. Lubricate:
   - valve stem ①
   - valve stem seal ②
     (with the recommended lubricant)

	Recommended lubricant **Molybdenum disulfide oil**

3. Install:
   - valve ①
   - valve spring seat ②
   - valve stem seal ③
   - valve spring ④
   - valve spring retainer ⑤
     (into the cylinder head)

NOTE:

- Install the valve spring with the larger pitch ⓐ facing up.
- Install the valve spring with its painted end facing up.

ⓑ Smaller pitch

http://manuals.magnamaniac.com

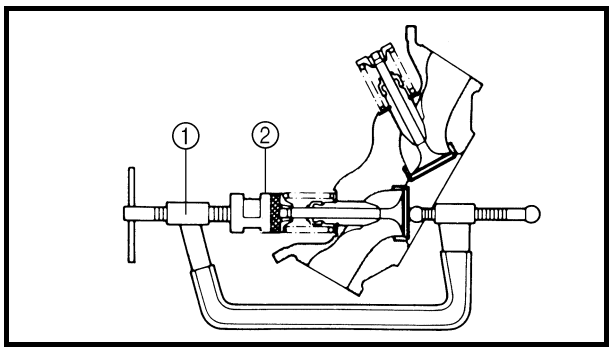

4. Install:
   • valve cotters

NOTE:
Install the valve cotters by compressing the valve spring with the valve spring compressor ① and the valve spring compressor attachment ②.

Valve spring compressor
98090-04019
Valve spring compressor attachment
90890-01243

5. To secure the valve cotters onto the valve stem, lightly tap the valve tip with a soft-face hammer.

CAUTION:
Hitting the valve tip with excessive force can damage the valve.

http://manuals.magnamaniac.com

EAS00251
CYLINDER AND PISTON

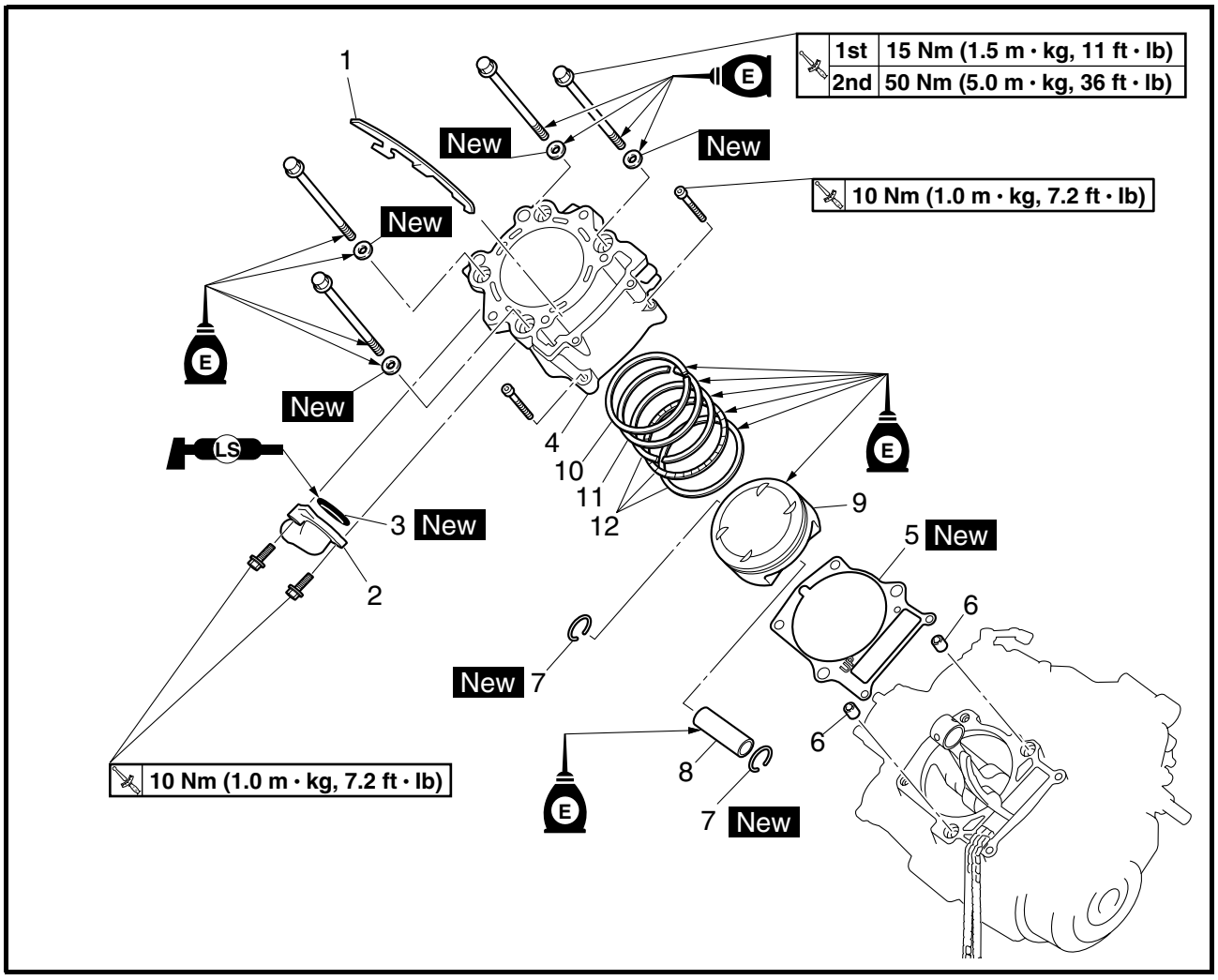

Order	Job/Part	Q'ty	Remarks
	Removing the cylinder and piston		Remove the parts in the order listed.
	Cylinder head		Refer to "CYLINDER HEAD".
1	Timing chain guide (exhaust)	1	
2	Water jacket joint	1	
3	O-ring	1	
4	Cylinder	1	Refer to "INSTALLING THE PISTON AND CYLINDER".
5	Cylinder gasket	1	
6	Dowel pin	2	
7	Piston pin clip	2	Refer to "REMOVING THE CYLINDER AND PISTON" and "INSTALLING THE PISTON AND CYLINDER".
8	Piston pin	1	
9	Piston	1	
10	Top ring	1	

http://manuals.magnamaniac.com

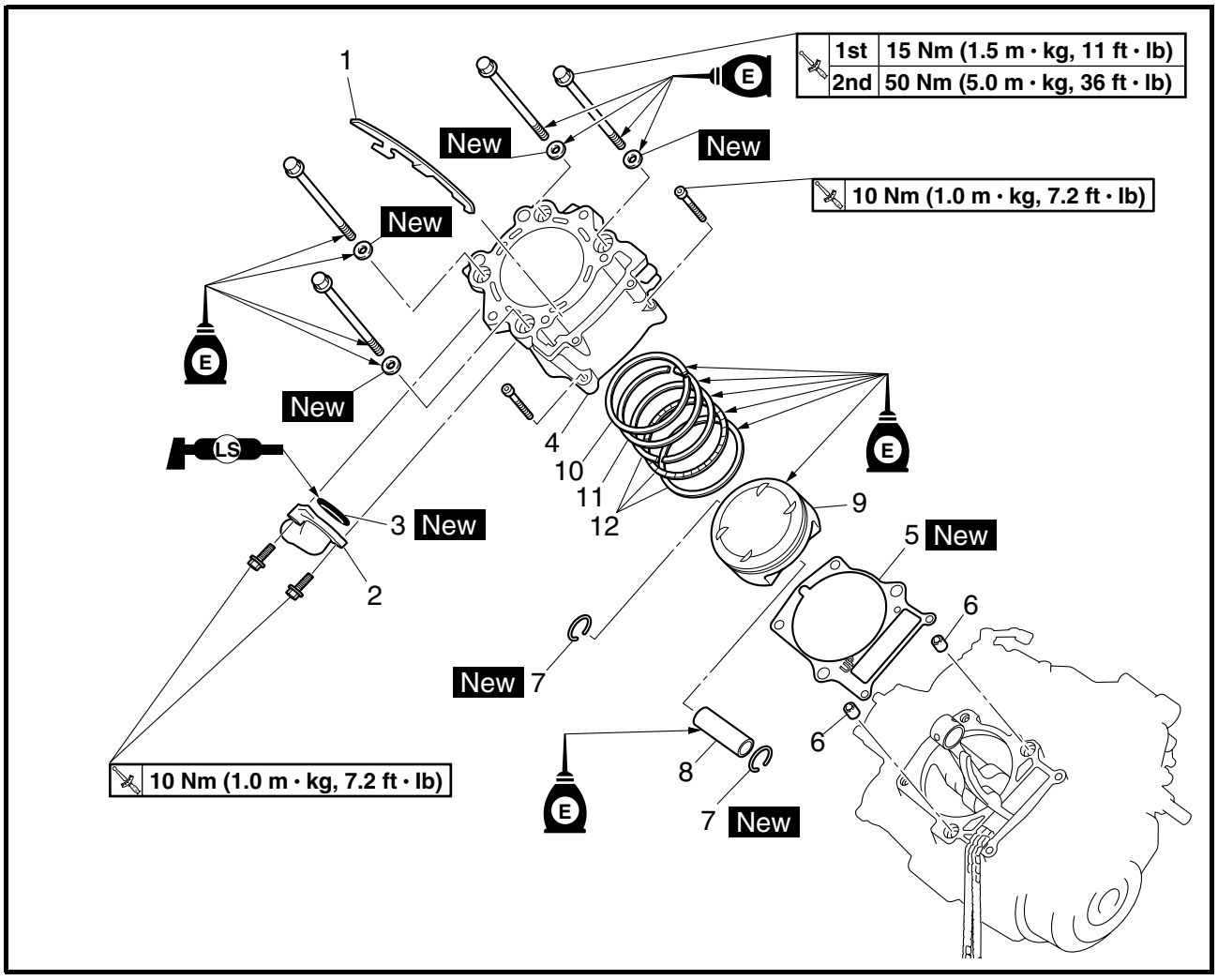

Order	Job/Part	Q'ty	Remarks
11	2nd ring	1	Refer to "REMOVING THE CYLINDER AND PISTON" and "INSTALLING THE PISTON AND CYLINDER".
12	Oil ring	1	
			For installation, reverse the removal procedure.

http://manuals.magnamaniac.com

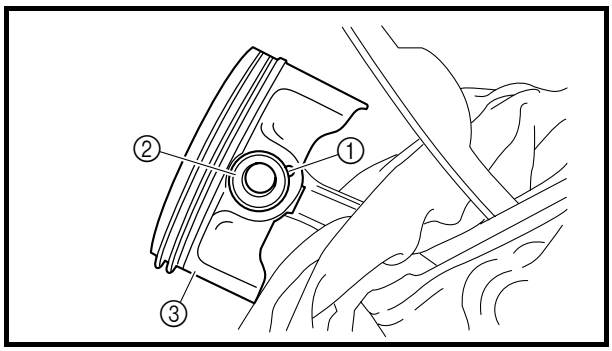

EAS00253
REMOVING THE CYLINDER AND PISTON

1. Remove:
   - piston pin clips ①
   - piston pin ②
   - piston ③

CAUTION:

Do not use a hammer to drive the piston pin out.

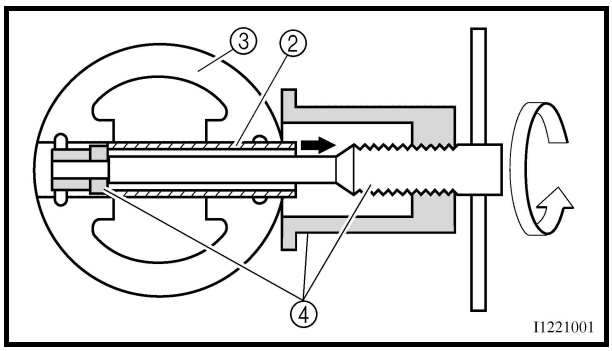

NOTE:

- Before removing the piston pin clip, cover the crankcase opening with a clean rag to prevent the piston pin clip from falling into the crankcase.
- Before removing the piston pin, deburr the piston pin clip's groove and the piston's pin bore area. If both areas are deburred and the piston pin is still difficult to remove, remove it with the piston pin puller set ④.

Piston pin puller set
90890-01304

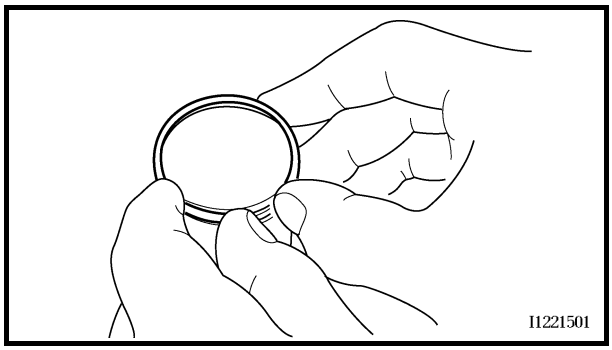

2. Remove:
   - top ring
   - 2nd ring
   - oil ring

NOTE:

When removing a piston ring, open the end gap with your fingers and lift the other side of the ring over the piston crown.

EAS00255
CHECKING THE CYLINDER AND PISTON

1. Check:
   - piston wall
   - cylinder wall

     Vertical scratches → Replace the cylinder and the piston and piston rings as a set.

http://manuals.magnamaniac.com

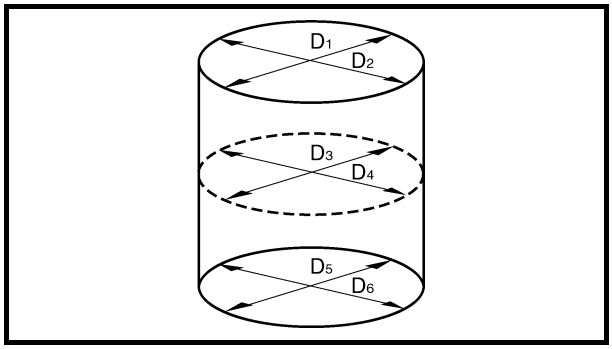

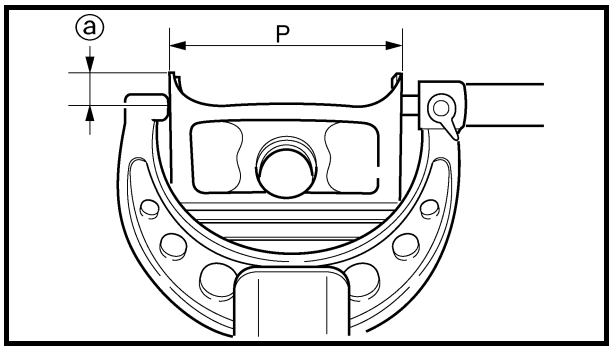

2. Measure:
   • piston-to-cylinder clearance

▼▼▼▼▼▼▼▼▼▼▼▼▼▼▼▼▼▼▼▼▼▼▼▼▼▼▼▼▼▼▼▼▼▼

a. Measure cylinder bore "C" with the cylinder bore gauge.

NOTE:

Measure cylinder bore "C" by taking side-to-side and front-to-back measurements of the cylinder. Then, find the average of the measurements.

Cylinder bore "C"	**100.000 ~ 100.010 mm (3.9370 ~ 3.9374 in)**
Taper limit "T"	**0.05 mm (0.002 in)**
Out-of-round "R"	**0.05 mm (0.002 in)**

"C" = maximum of D_1 ~ D_2
"T" = maximum of D_1 or D_2 – maximum of D_5 or D_6
"R" = maximum of D_1, D_3 or D_5 – minimum of D_2, D_4 or D_6

b. If out of specification, replace the cylinder and the piston and piston rings as a set.

c. Measure piston skirt diameter "P" with the micrometer.

ⓐ 10 mm (0.39 in) from the bottom edge of the piston

d. If out of specification, replace the piston and piston rings as a set.

e. Calculate the piston-to-cylinder clearance with the following formula.

Piston-to-cylinder clearance =
Cylinder bore "C" -
Piston skirt diameter "P"

Piston-to-cylinder clearance
0.030 ~ 0.055 mm
(0.0012 ~ 0.0022 in)
<Limit>: 0.13 mm (0.0051 in)

f. If out of specification, replace the cylinder and the piston and piston rings as a set.

▲▲▲▲▲▲▲▲▲▲▲▲▲▲▲▲▲▲▲▲▲▲▲▲▲▲▲▲▲▲▲▲▲▲

http://manuals.magnamaniac.com

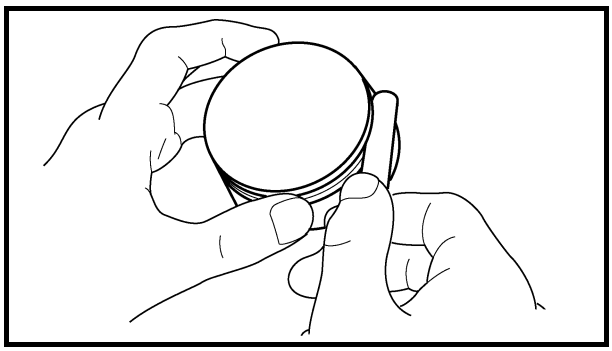

EAS00263
CHECKING THE PISTON RINGS

1. Measure:
   - piston ring side clearance
     Out of specification → Replace the piston and piston rings as a set.

NOTE:
Before measuring the piston ring side clearance, eliminate any carbon deposits from the piston ring grooves and piston rings.

Piston ring side clearance
Top ring
0.030 ~ 0.080 mm
(0.0012 ~ 0.0031 in)
<Limit>: 0.13 mm (0.0051 in)
2nd ring
0.030 ~ 0.070 mm
(0.0012 ~ 0.0028 in)
<Limit>: 0.11 mm (0.0043 in)

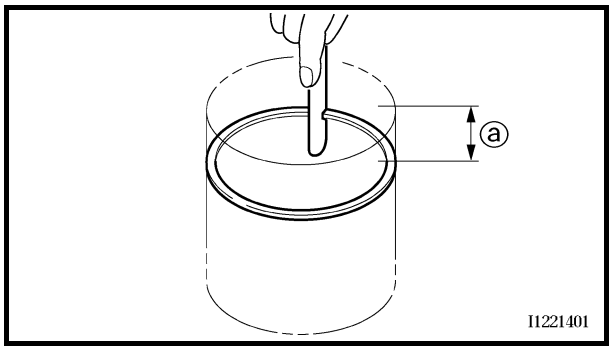

2. Install:
   - piston ring
     (into the cylinder)

NOTE:
Level the piston ring into the cylinder with the piston crown.

ⓐ 40 mm (1.57 in)

3. Measure:
   - piston ring end gap
     Out of specification → Replace the piston ring.

NOTE:
The oil ring expander spacer's end gap cannot be measured. If the oil ring rail's gap is excessive, replace all three piston rings.

Piston ring end gap
Top ring
0.20 ~ 0.35 mm
(0.0079 ~ 0.0138 in)
<Limit>: 0.60 mm (0.0236 in)
2nd ring
0.35 ~ 0.50 mm
(0.0138 ~ 0.0197 in)
<Limit>: 0.85 mm (0.0335 in)
Oil ring
0.20 ~ 0.70 mm
(0.0079 ~ 0.0276 in)

http://manuals.magnamaniac.com

EAS00265
CHECKING THE PISTON PIN

1. Check:
   - piston pin
     Blue discoloration/grooves → Replace the piston pin, and then check the lubrication system.

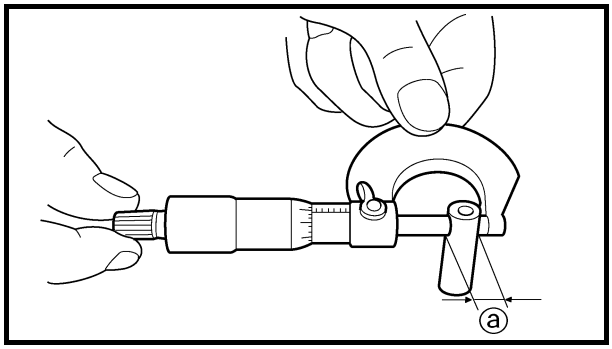

2. Measure:
   - piston pin outside diameter ⓐ
     Out of specification → Replace the piston pin.

Piston pin outside diameter
22.991 ~ 23.000 mm
(0.9052 ~ 0.9055 in)
<Limit>: 22.971 mm (0.9044 in)

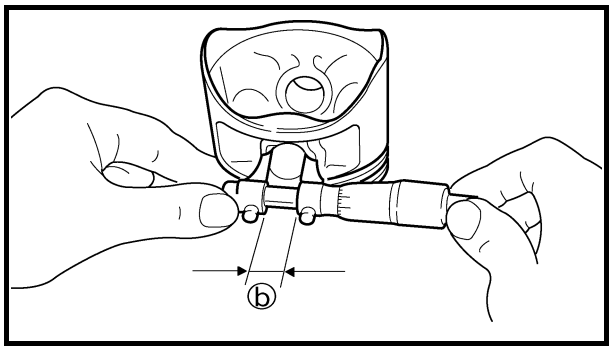

3. Measure:
   - piston pin bore inside diameter ⓑ
     Out of specification → Replace the piston.

Piston pin bore inside diameter
23.004 ~ 23.015 mm
(0.9057 ~ 0.9061 in)
<Limit>: 23.045 mm (0.9073 in)

4. Calculate:
   - piston-pin-to-piston-pin-bore clearance
     Out of specification → Replace the piston pin and piston as a set.

Piston-pin-to-piston-pin-bore clearance =
Piston pin bore inside diameter ⓑ –
Piston pin outside diameter ⓐ

Piston-pin-to-piston clearance
0.004 ~ 0.024 mm
(0.0002 ~ 0.0009 in)
<Limit>: 0.074 mm (0.0029 in)

http://manuals.magnamaniac.com

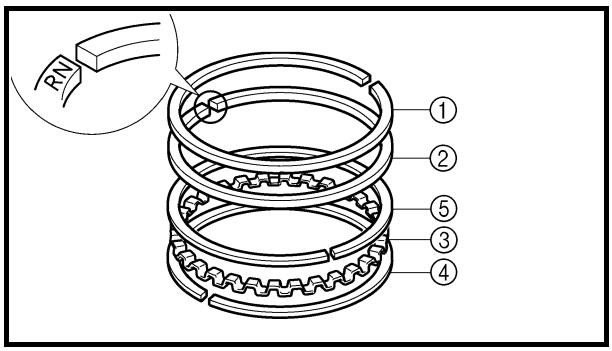

EAS00267
INSTALLING THE PISTON AND CYLINDER

1. Install:
   - top ring ①
   - 2nd ring ②
   - oil ring expander ③
   - lower oil ring rail ④
   - upper oil ring rail ⑤

NOTE:
Be sure to install the piston rings so that the manufacturer's marks or numbers face up.

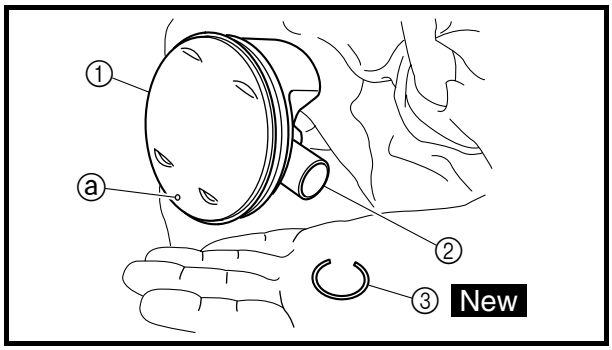

2. Install:
   - piston ①
   - piston pin ②
   - piston pin clips ③ New

NOTE:
- Apply engine oil to the piston pin.
- Make sure the punch mark ⓐ on the piston points towards the exhaust side of the cylinder.
- Before installing the piston pin clips, cover the crankcase opening with a clean rag to prevent the clip from falling into the crankcase.

3. Install:
   - cylinder gasket New
   - dowel pins
4. Lubricate:
   - piston
   - piston rings
   - cylinder
     (with the recommended lubricant)

	Recommended lubricant **Engine oil**

http://manuals.magnamaniac.com

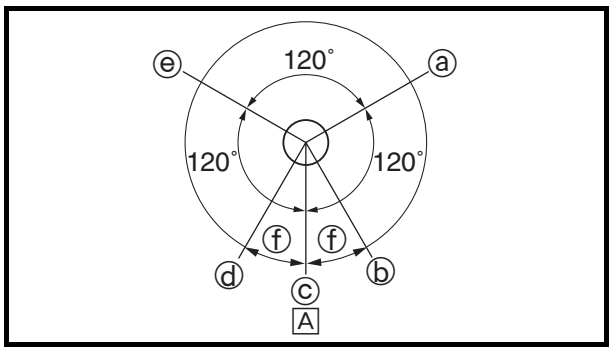

5. Offset:
   • piston ring end gaps

ⓐ Top ring
ⓑ Upper oil ring rail
ⓒ Oil ring expander
ⓓ Lower oil ring rail
ⓔ 2nd ring
ⓕ 20 mm (0.79 in)
A Exhaust side

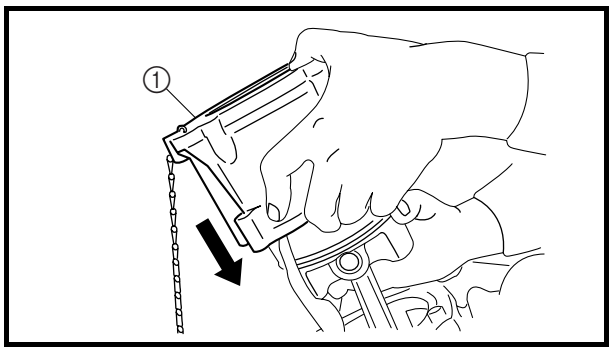

6. Install:
   • cylinder ①
   • timing chain guide (exhaust)

NOTE:
- While compressing the piston rings with one hand, install the cylinder with the other hand.
- Pass the timing chain and timing chain guide (exhaust side) through the timing chain cavity.

7. Install:
   • washers New
   • cylinder bolts

NOTE:
- Lubricate the cylinder bolt threads and muting surface with engine oil.
- Install the washers with their blunt surface facing up.

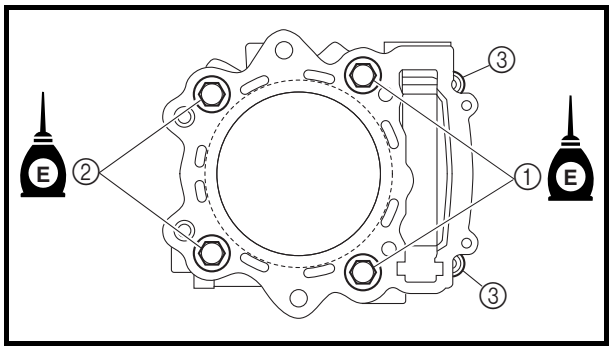

8. Tighten:
   • cylinder bolts ℓ = 116 mm (4.57 in) ①
   • cylinder bolts ℓ = 109 mm (4.29 in) ②

Cylinder bolt
1st
15 Nm (1.5 m · kg, 11 ft · lb)
2nd
50 Nm (5.0 m · kg, 36 ft · lb)

   • cylinder bolts (timing chain side) ③

10 Nm (1.0 m · kg, 7.2 ft · lb)

http://manuals.magnamaniac.com

EAS00273
CLUTCH
CLUTCH COVER

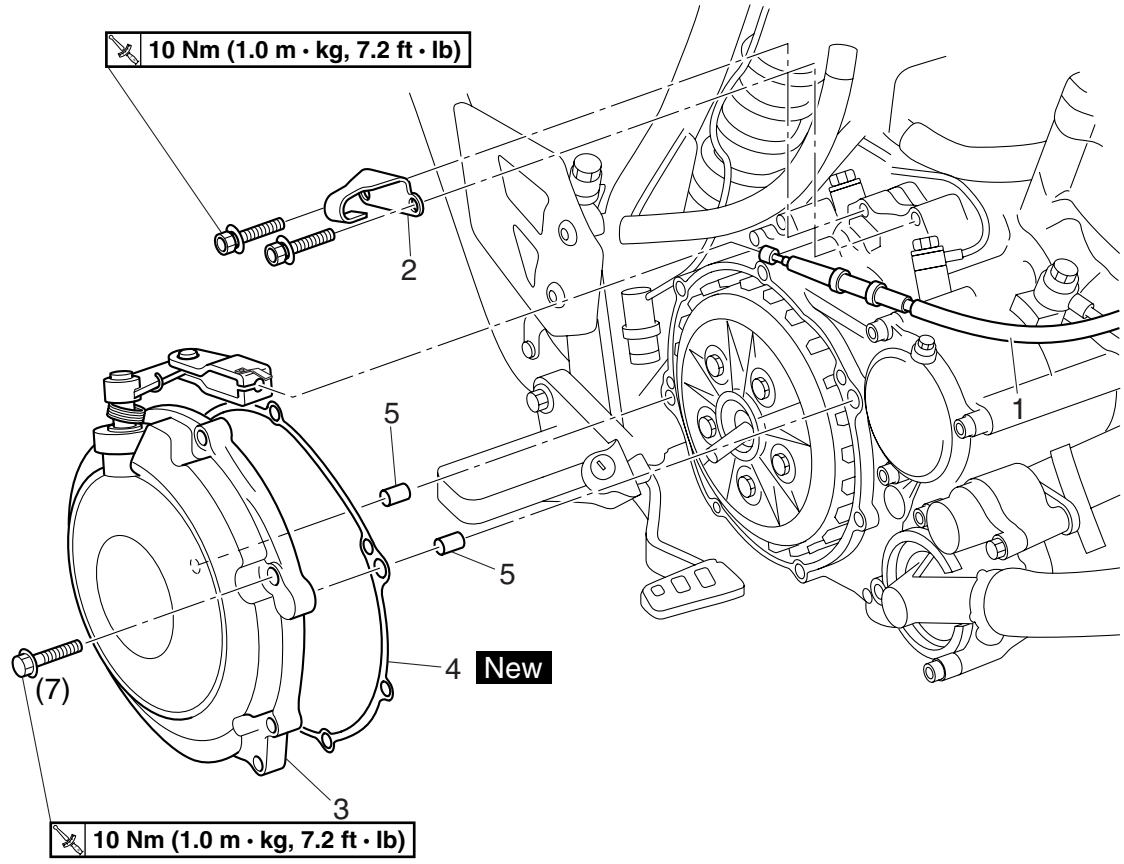

Order	Job/Part	Q'ty	Remarks
	Removing the clutch cover		Remove the parts in the order listed.
	Engine oil		Drain. Refer to "CHANGING THE ENGINE OIL" in chapter 3.
1	Clutch cable	1	
2	Clutch cable holder	1	
3	Clutch cover	1	Refer to "REMOVING THE CLUTCH" and "INSTALLING THE CLUTCH".
4	Gasket	1	
5	Dowel pin	2	
			For installation, reverse the removal procedure.

http://manuals.magnamaniac.com

PULL LEVER SHAFT

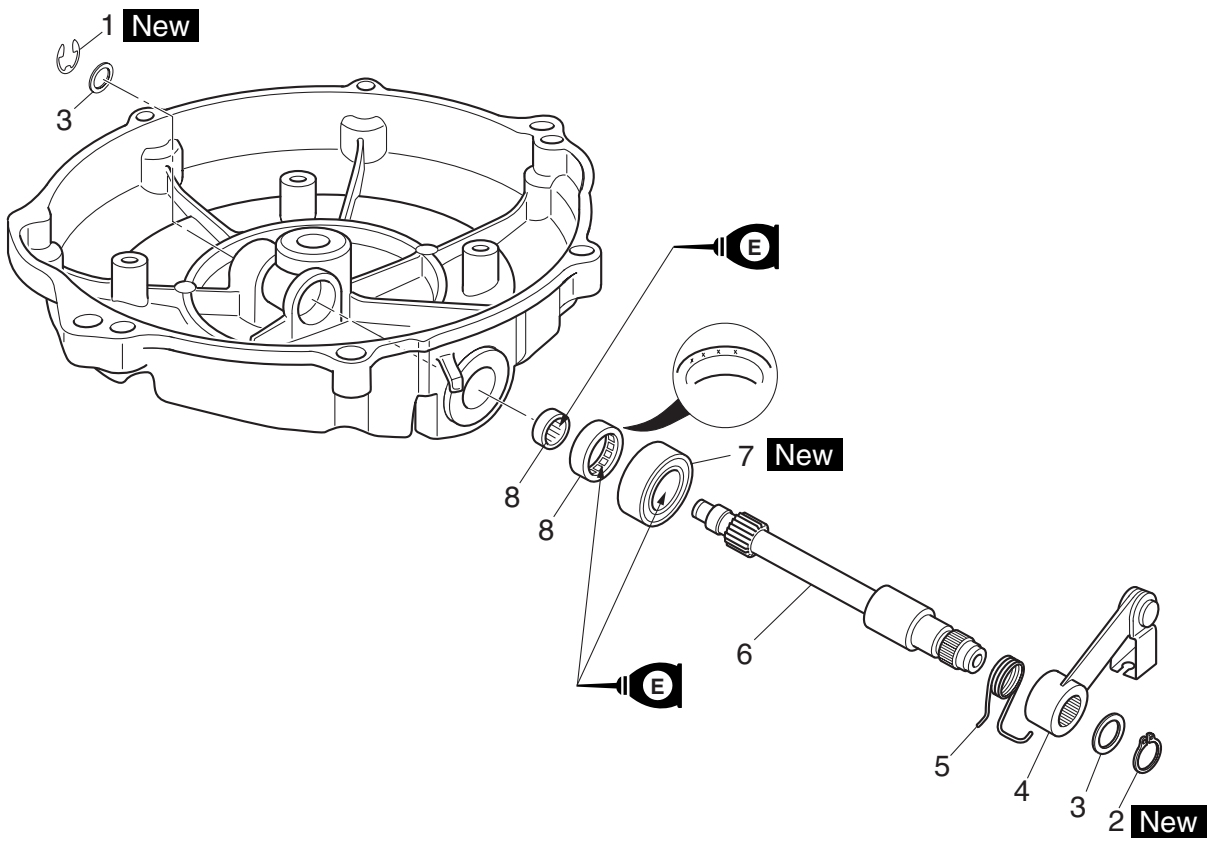

Order	Job/Part	Q'ty	Remarks
	Removing the pull lever shaft		Remove the parts in the order listed.
1	Circlip	1	
2	Circlip	1	
3	Washer	2	
4	Pull lever	1	
5	Pull lever spring	1	
6	Pull lever shaft	1	
7	Oil seal	1	
8	Bearing	2	
			For installation, reverse the removal procedure.

http://manuals.magnamaniac.com

EAS00274

CLUTCH

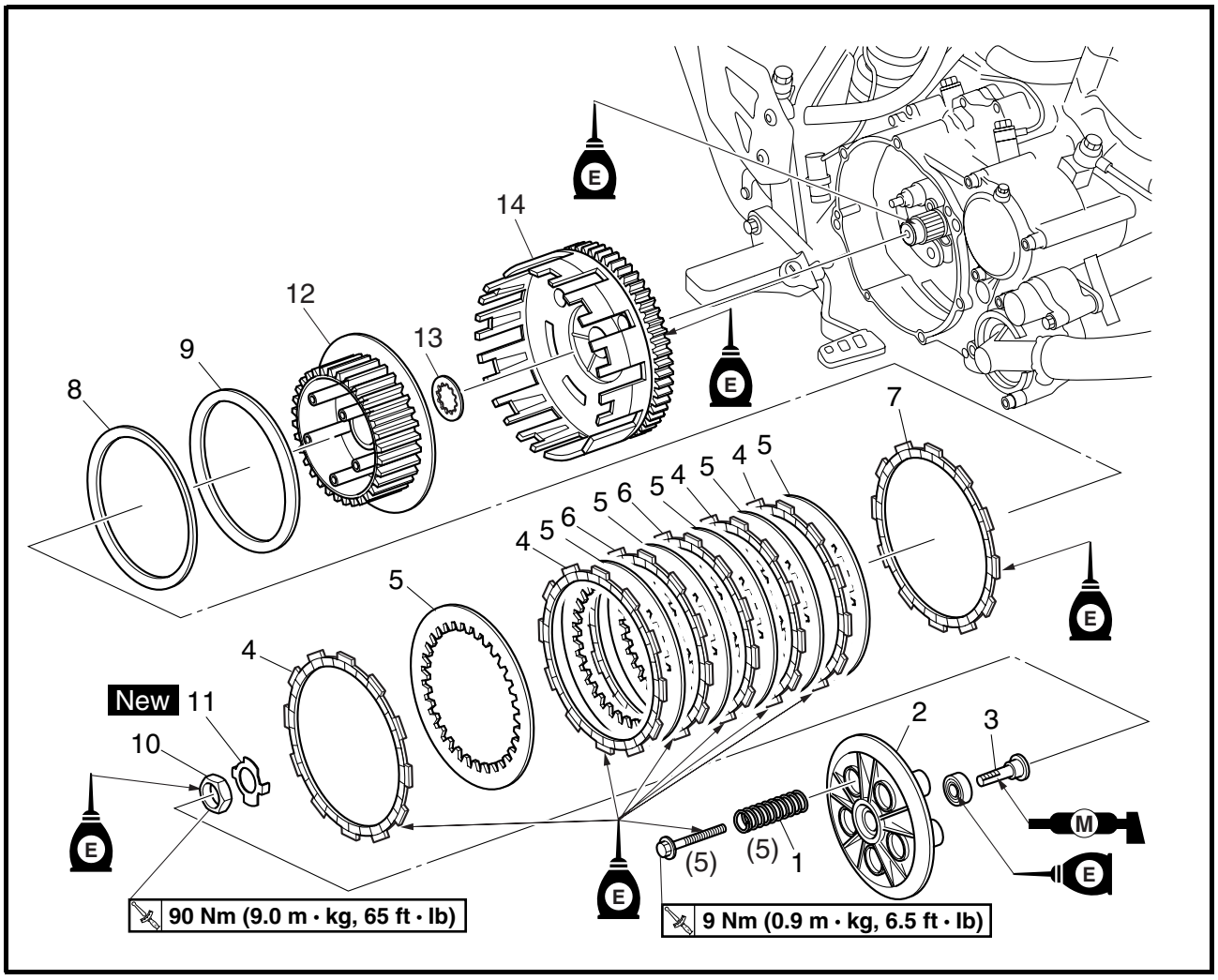

Order	Job/Part	Q'ty	Remarks
	Removing the clutch		Remove the parts in the order listed.
1	Clutch spring	5	
2	Pressure plate	1	
3	Pull rod	1	
4	Friction plate 1	4	Inside diameter (plate with notched tabs) = 119 mm (4.69 in)
5	Clutch plate	6	Refer to "INSTALLING THE CLUTCH".
6	Friction plate 2	2	Inside diameter (plate with no notched tabs) = 119 mm (4.69 in)
7	Friction plate 3	1	Inside diameter (plate with notched tabs) = 128 mm (5.04 in)
8	Clutch damper spring	1	
9	Clutch damper spring seat	1	

http://manuals.magnamaniac.com

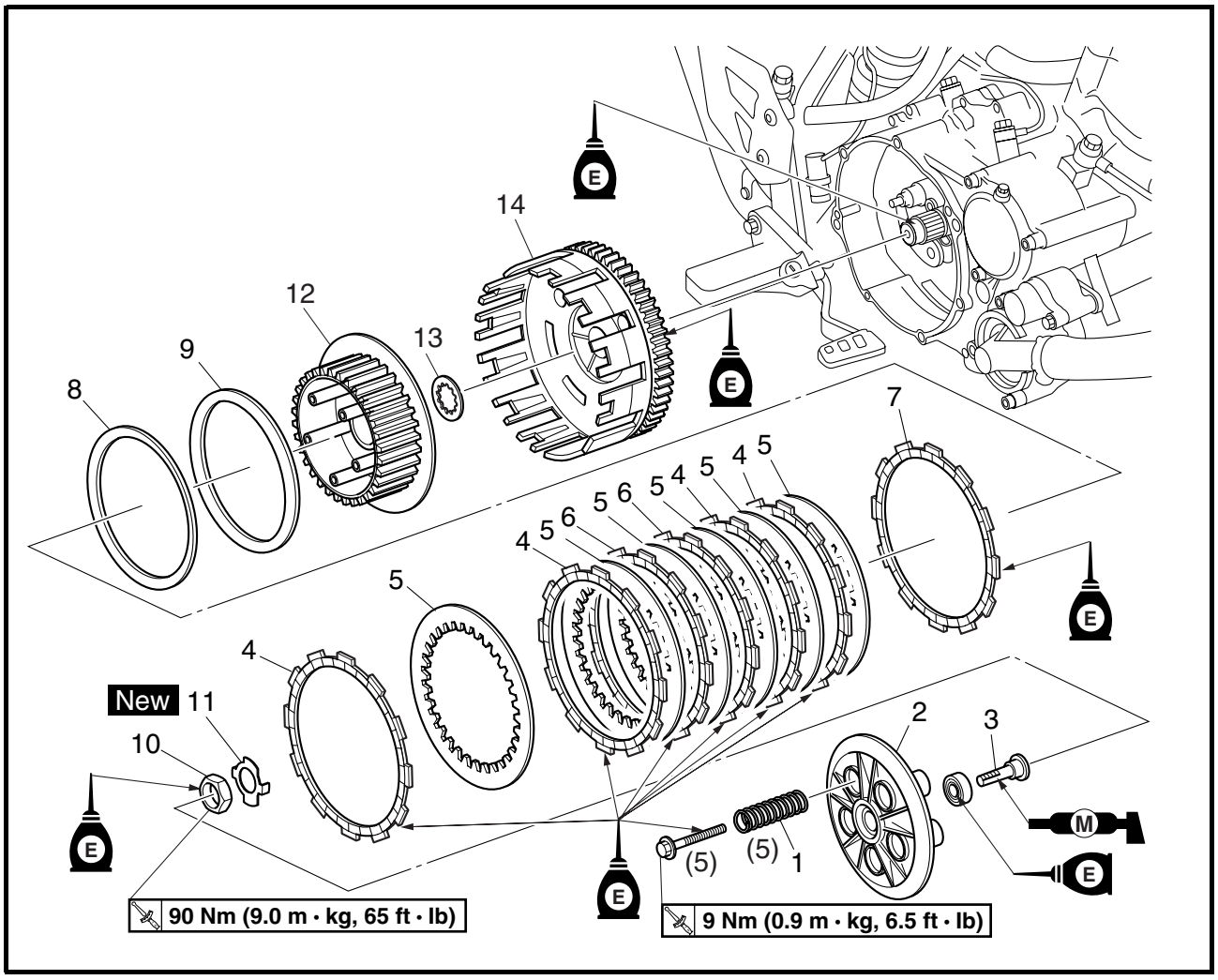

Order	Job/Part	Q'ty	Remarks
10	Clutch boss nut	1	Refer to "REMOVING THE CLUTCH" and "INSTALLING THE CLUTCH".
11	Lock washer	1	
12	Clutch boss	1	
13	Thrust washer	1	
14	Clutch housing	1	
			For installation, reverse the removal procedure.

http://manuals.magnamaniac.com

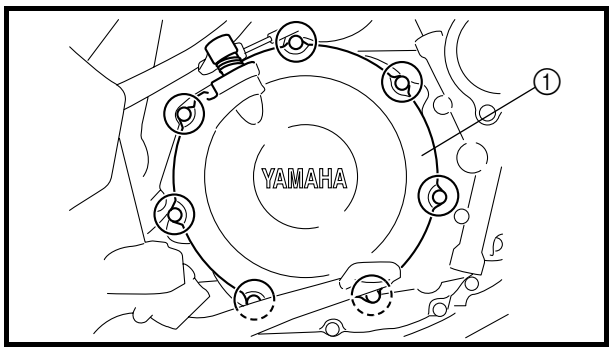

EAS00275
REMOVING THE CLUTCH

1. Remove:
   - clutch cover ①

NOTE:
Loosen each bolt 1/4 of a turn at a time, in stages and in a crisscross pattern. After all of the bolts are fully loosened, remove them.

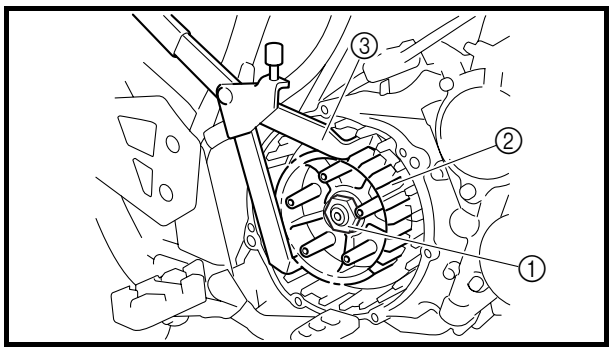

2. Straighten the lock washer tab.
3. Loosen:
   - clutch boss nut ①

NOTE:
While holding the clutch boss ② with the universal clutch holder ③, loosen the clutch boss nut.

	Universal clutch holder **90890-04086**

4. Remove:
   - clutch boss nut
   - lock washer
   - clutch boss

EAS00280
CHECKING THE FRICTION PLATES

The following procedure applies to all of the friction plates.

1. Check:
   - friction plate 1
   - friction plate 2
   - friction plate 3

   Damage/wear → Replace the friction plates as a set.

http://manuals.magnamaniac.com

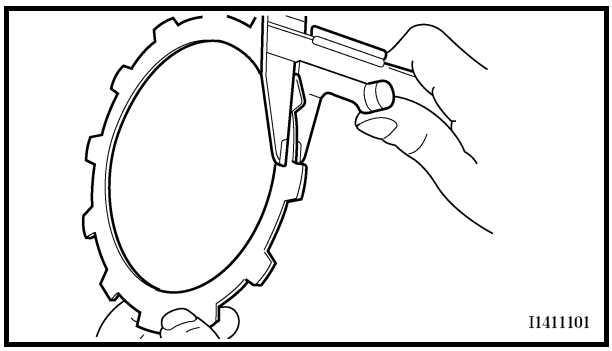

2. Measure:
   - friction plate 1 thickness
   - friction plate 2 thickness
   - friction plate 3 thickness

   Out of specification → Replace the friction plates as a set.

NOTE:
Measure the friction plate at four places.

Friction plate 1 thickness
2.90 ~ 3.10 mm (0.114 ~ 0.122 in)
<Limit>: 2.80 mm (0.110 in)
Friction plate 2 thickness
2.92 ~ 3.08 mm
(0.115 ~ 0.121 in)
<Limit>: 2.80 mm (0.110 in)
Friction plate 3 thickness
2.90 ~ 3.10 mm (0.114 ~ 0.122 in)
<Limit>: 2.80 mm (0.110 in)

EAS00281
CHECKING THE CLUTCH PLATES

The following procedure applies to all of the clutch plates.

1. Check:
   - clutch plate

   Damage → Replace the clutch plates as a set.
2. Measure:
   - clutch plate warpage

   (with a surface plate and thickness gauge ①)

   Out of specification → Replace the clutch plates as a set.

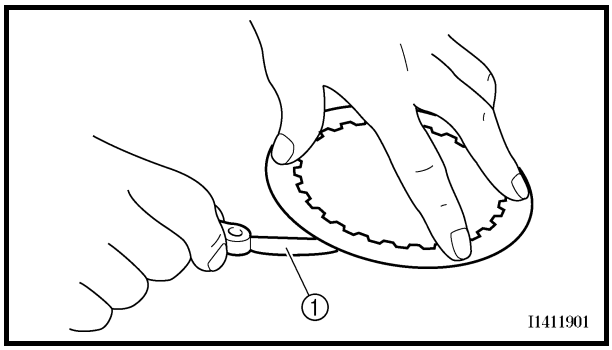

Clutch plate warpage limit
0.20 mm (0.0079 in)

EAS00282
CHECKING THE CLUTCH SPRINGS

The following procedure applies to all of the clutch springs.

1. Check:
   - clutch spring

   Damage → Replace the clutch springs as a set.

http://manuals.magnamaniac.com

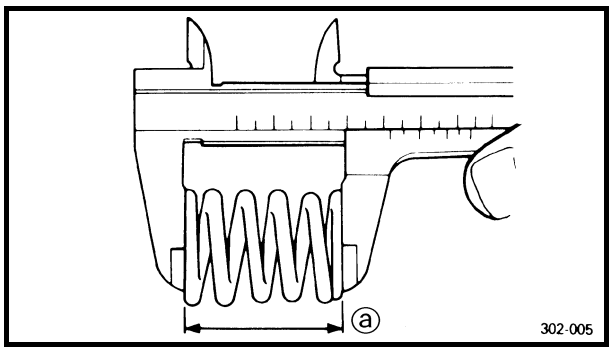

2. Measure:
   • clutch spring free length ⓐ
   Out of specification → Replace the clutch springs as a set.

Clutch spring free length
55.6 mm (2.19 in)
<Limit>: 52.82 mm (2.08 in)

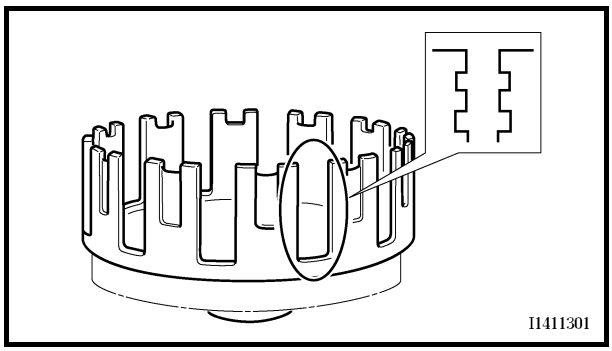

EAS00284
CHECKING THE CLUTCH HOUSING

1. Check:
   • clutch housing dogs
   Damage/pitting/wear → Deburr the clutch housing dogs or replace the clutch housing.

NOTE:
Pitting on the clutch housing dogs will cause erratic clutch operation.

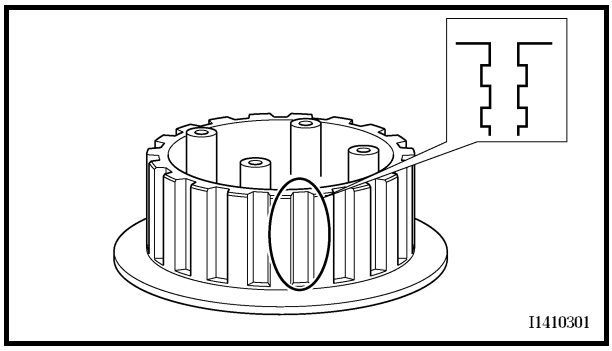

EAS00285
CHECKING THE CLUTCH BOSS

1. Check:
   • clutch boss splines
   Damage/pitting/wear → Replace the clutch boss.

NOTE:
Pitting on the clutch boss splines will cause erratic clutch operation.

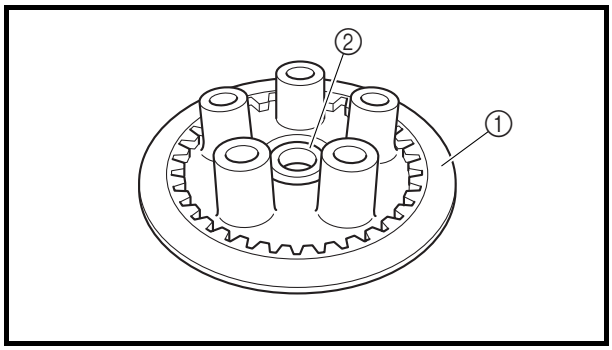

EAS00286
CHECKING THE PRESSURE PLATE

1. Check:
   • pressure plate ①
   Cracks/damage → Replace.
   • bearing ②
   Damage/wear → Replace.

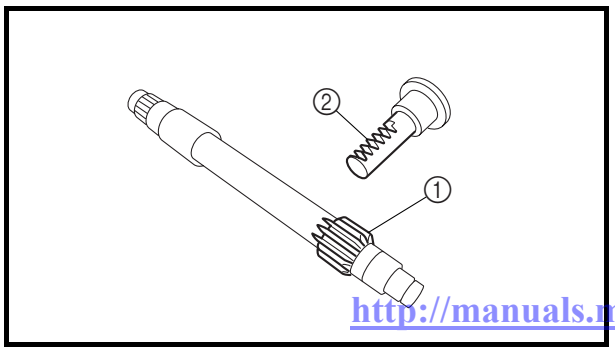

EAS00287
CHECKING THE PULL LEVER SHAFT AND PULL ROD

1. Check:
   • pull lever shaft pinion gear teeth ①
   • pull rod teeth ②
   Damage/wear → Replace the pull rod and pull lever shaft pinion gear as a set.

http://manuals.magnamaniac.com

2. Check:
   • pull rod bearing
   Damage/wear → Replace.

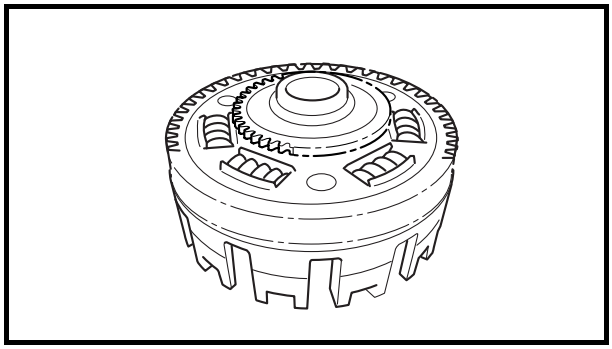

EAS00292
CHECKING THE PRIMARY DRIVEN GEAR

1. Check:
   • primary driven gear
   Damage/wear → Replace the primary drive gear and clutch housing as a set.
   Excessive noise during operation → Replace the primary drive gear and clutch housing as a set.

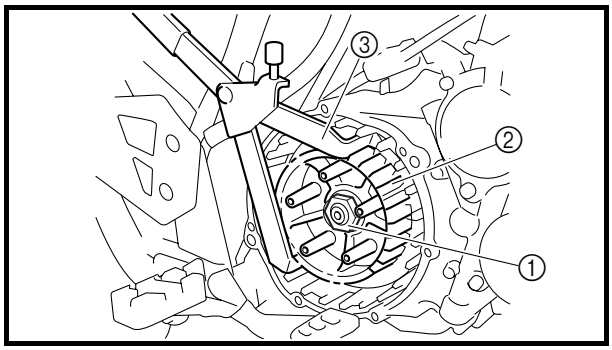

EAS00299
INSTALLING THE CLUTCH

1. Install:
   • clutch boss
   • lock washer New
   • clutch boss nut ①

NOTE:
Lubricate the crankshaft end threads with engine oil.

2. Tighten:
   • clutch boss nut

	90 Nm (9.0 m · kg, 65 ft · lb)

NOTE:
While holding the clutch boss ② with the universal clutch holder ③, tighten the clutch boss nut.

	Universal clutch holder **90890-04086**

3. Bend the lock washer tab along a flat side of the nut.

http://manuals.magnamaniac.com

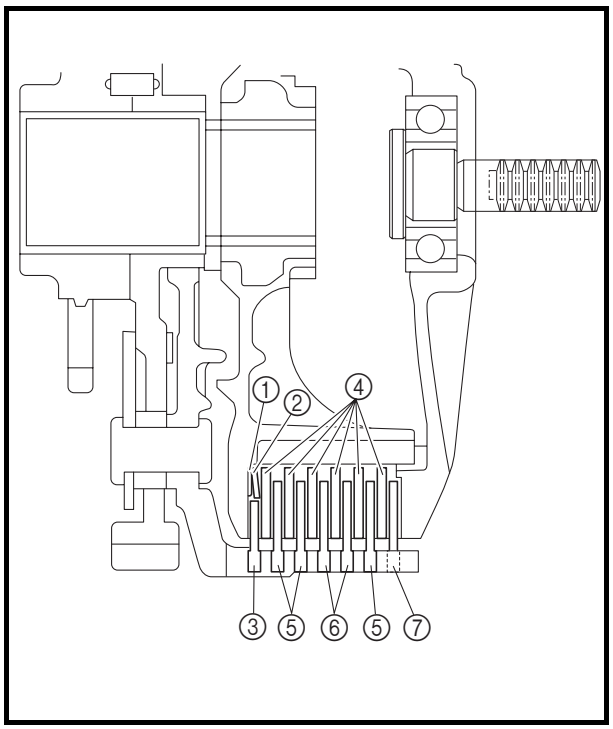

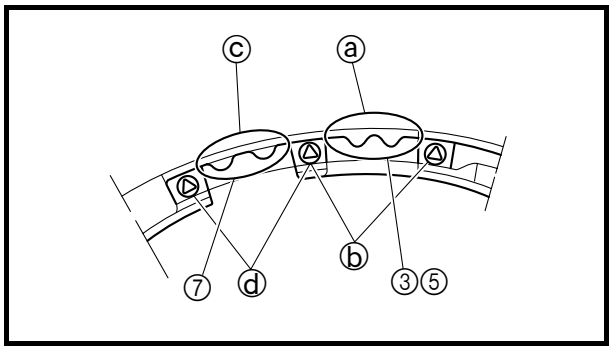

4. Lubricate:
   - friction plates
   - clutch plates
   (with the recommended lubricant)

	Recommended lubricant **Engine oil**

5. Install:
   - clutch damper spring seat ①
   - clutch damper spring ②
   - friction plate 3 ③
   - clutch plates ④
   - friction plates 1 ⑤, ⑦
   - friction plates 2 ⑥

NOTE:
- Install the clutch damper spring ② with the "OUTSIDE" mark facing out.
- First, install a friction plate and then alternate between a clutch plate and a friction plate.
- Install friction plate 3 ③ and friction plate 1 ⑤ so that the tab with two notches ⓐ is between the two punch marks ⓑ on the clutch housing as shown.
- Install friction plate 1 ⑦ so that the tab with two notches ⓒ is between the two punch marks ⓓ on the clutch housing as shown.

6. Install:
   - clutch springs
   - clutch spring bolts

9 Nm (0.9 m · kg, 6.5 ft · lb)

NOTE:
- Lubricate the clutch spring threads with engine oil.
- Tighten the clutch spring bolts in stages and in a crisscross pattern.

7. Install:
   - dowel pins
   - gasket New
   - clutch cover **10 Nm (1.0 m · kg, 7.2 ft · lb)**
   - clutch cable holder

10 Nm (1.0 m · kg, 7.2 ft · lb)

http://manuals.magnamaniac.com

NOTE:
- To install the clutch cover, position the pull rod so that the teeth face towards that rear of the motorcycle.
- Tighten the clutch cover bolts in stages and in a crisscross pattern.

8. Install:
   - pull lever spring ①
   - pull lever ②
   - washer
   - circlip New

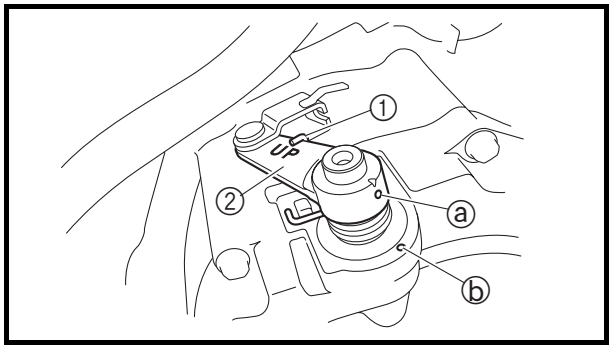

NOTE:
- Install the pull lever with the “UP” mark facing up.
- Align the punch mark ⓐ on the pull lever with the punch mark ⓑ on the clutch cover.
- Install the pull lever spring ① as shown.

9. Install:
   - clutch cable ①

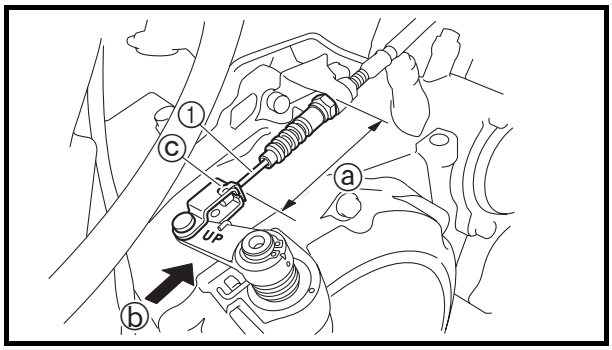

10. Check:
   - clutch cable length ⓐ
     Out of specification → Adjust.

NOTE:
- Push the pull lever in direction ⓑ and check the cable length ⓐ.
- Bend the tab ⓒ on the pull lever to secure the clutch cable.

Clutch cable length
65.6 ~ 73.9 mm (2.58 ~ 2.91 in)

11. Adjust:
   - clutch cable length

NOTE:
Move the pull lever a notch until the cable length is within specification.

12. Adjust:
   - clutch cable free play
     Refer to “ADJUSTING THE CLUTCH CABLE FREE PLAY” in chapter 3.

http://manuals.magnamaniac.com

OIL PUMP

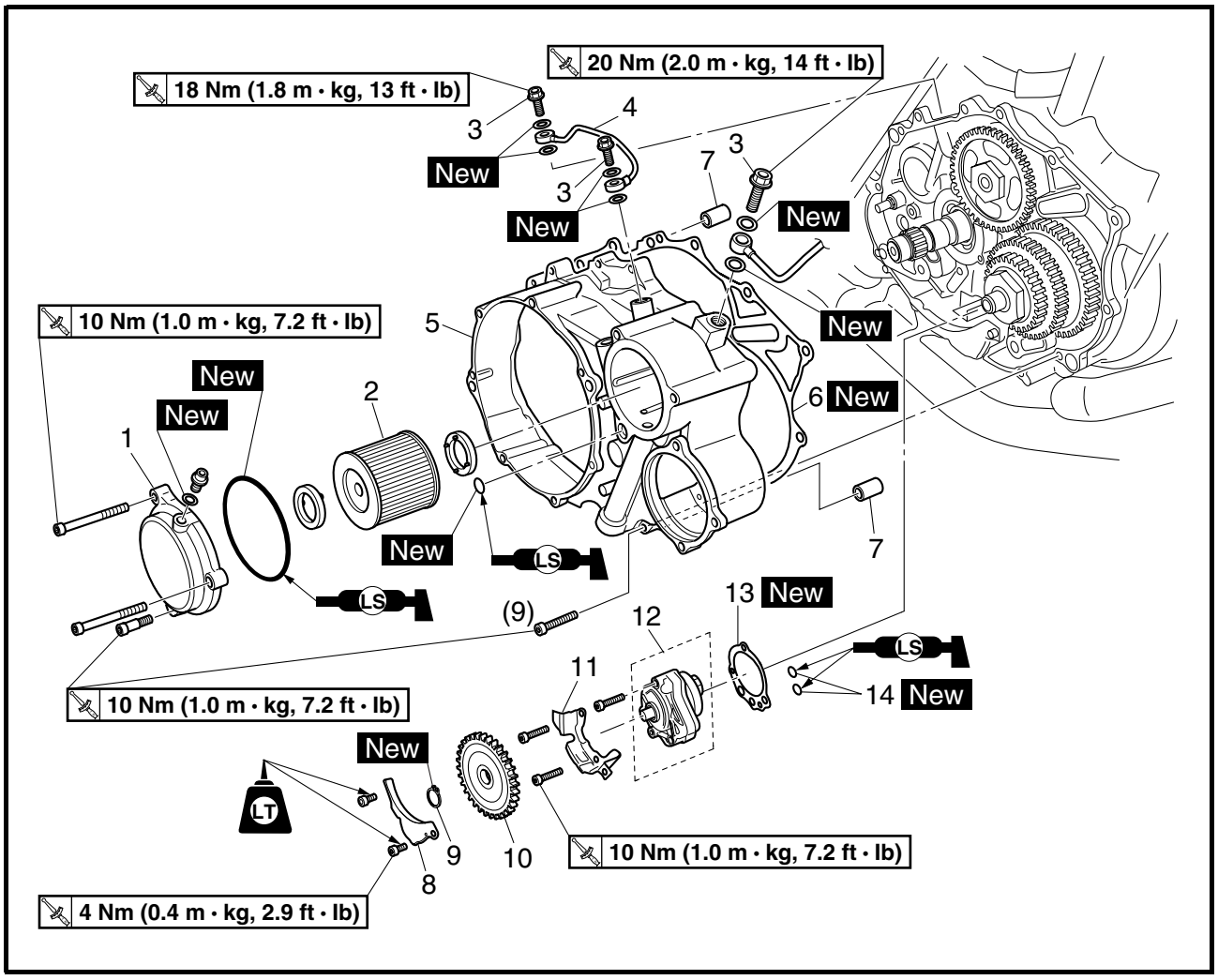

Order	Job/Part	Q'ty	Remarks
	Removing the oil pump		Remove the parts in the order listed.
	Engine oil		Drain. Refer to "CHECKING AND CHANGING THE ENGINE OIL" in chapter 3.
	Coolant		Drain. Refer to "CHANGING THE COOLANT" in chapter 3.
	Water pump assembly		Refer to "WATER PUMP" in chapter 6.
	Clutch cable holder/clutch housing		Refer to "CLUTCH".
	Right footrest/brake pedal assembly		Refer to "SWINGARM AND DRIVE CHAIN" in chapter 4.
1	Oil filter element cover	1	
2	Oil filter element	1	
3	Union bolt	3	
4	Oil delivery pipe 2	1	

http://manuals.magnamaniac.com

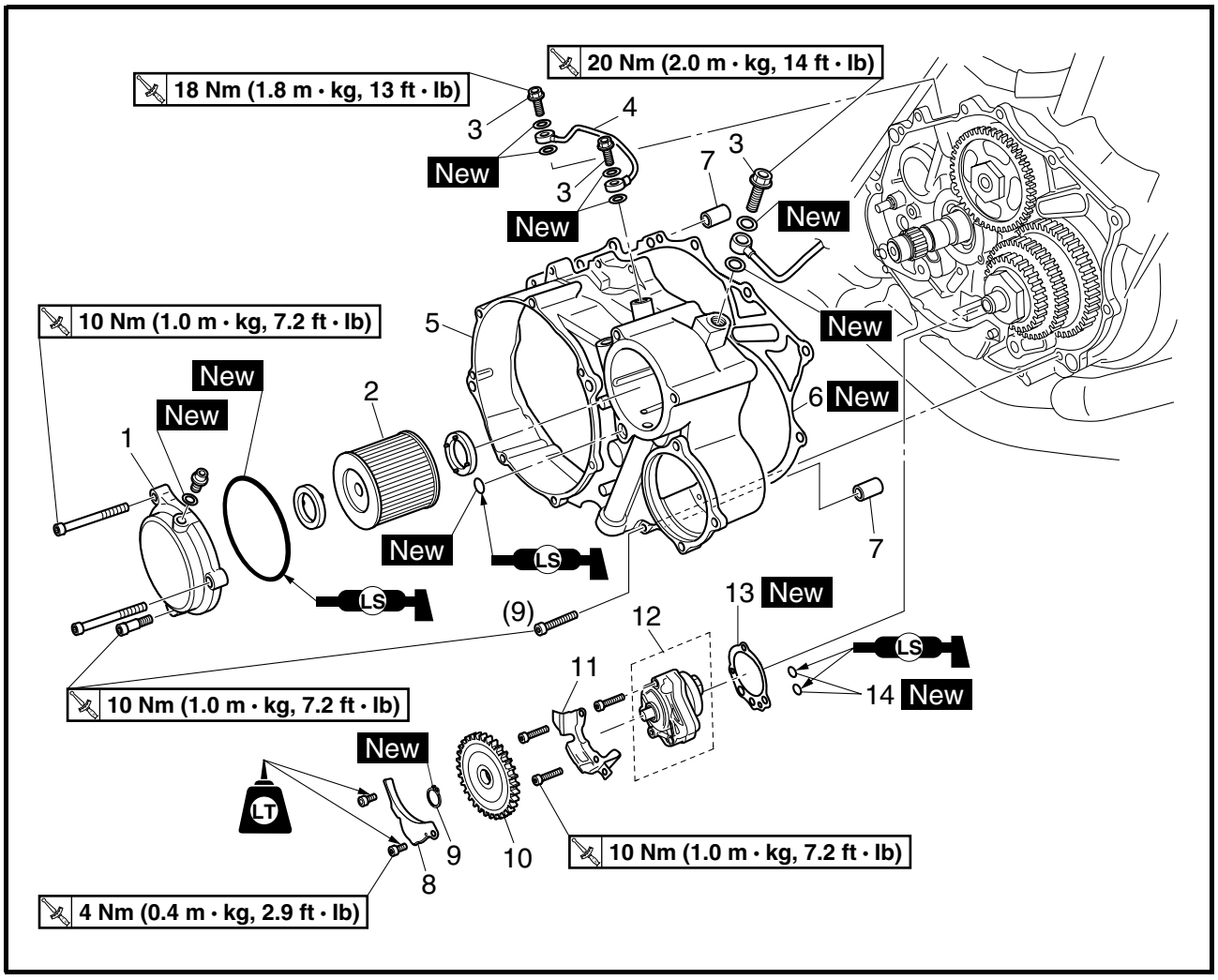

Order	Job/Part	Q'ty	Remarks
5	Crankcase cover (right)	1	
6	Gasket	1	
7	Dowel pin	2	
8	Oil baffle plate 1	1	
9	Circlip	1	Refer to "INSTALLING THE OIL PUMP".
10	Oil pump driven gear	1	
11	Oil baffle plate 2	1	
12	Oil pump	1	
13	Oil pump gasket	1	
14	O-ring	2	
			For installation, reverse the removal procedure.

http://manuals.magnamaniac.com

EAS00360

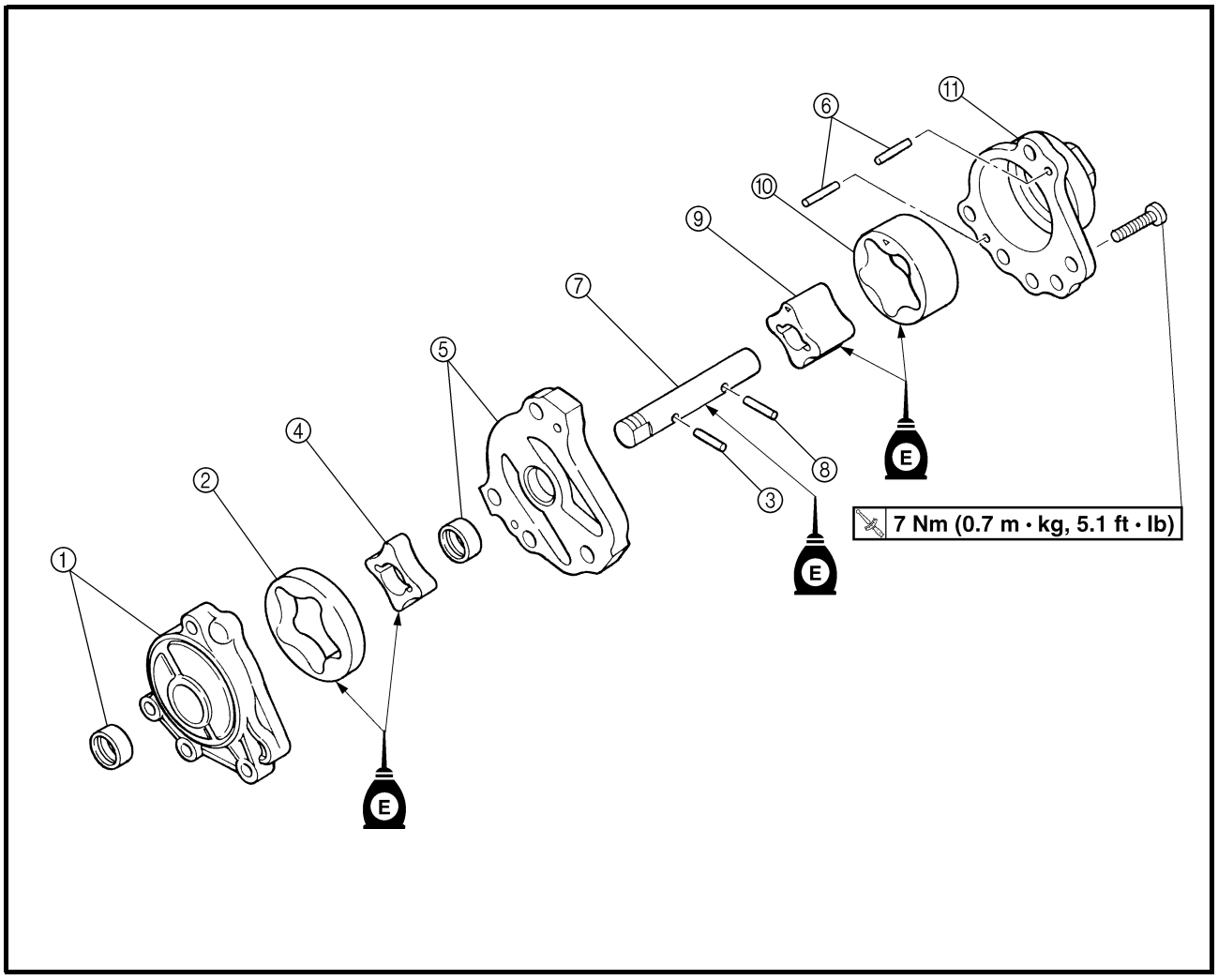

Order	Job/Part	Q'ty	Remarks
	Disassembling the oil pump		Remove the parts in the order listed.
①	Oil pump housing 1/oil seal	1/1	
②	Oil pump outer rotor 1	1	
③	Dowel pin	1	
④	Oil pump inner rotor 1	1	
⑤	Oil pump housing cover/oil seal	1/1	
⑥	Dowel pin	2	
⑦	Oil pump shaft	1	
⑧	Dowel pin	1	
⑨	Oil pump inner rotor 2	1	Refer to "ASSEMBLING THE OIL PUMP".
⑩	Oil pump outer rotor 2	1	
⑪	Oil pump housing 2	1	
			For assembly, reverse the disassembly procedure.

http://manuals.magnamaniac.com

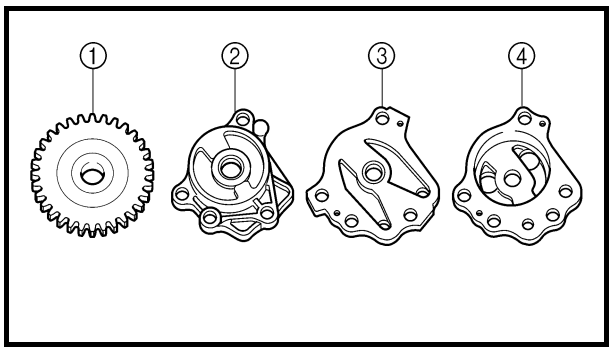

EAS00364
CHECKING THE OIL PUMP

1. Check:
   - oil pump driven gear ①
   - oil pump housing 1 ②
   - oil pump housing cover ③
   - oil pump housing 2 ④

   Cracks/damage/wear → Replace the defective part(s).

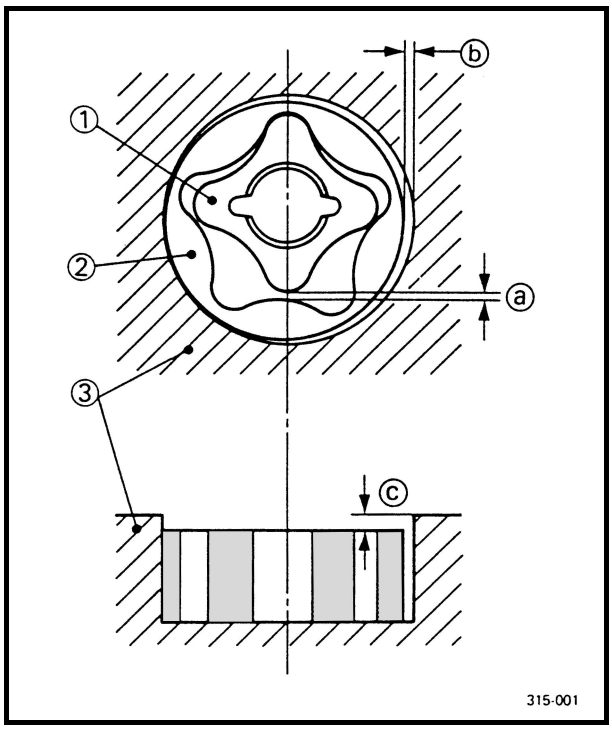

2. Measure:
   - inner-rotor-to-outer-rotor-tip clearance ⓐ
   - outer-rotor-to-oil-pump-housing clearance ⓑ
   - oil-pump-housing-to-inner-rotor-and-outer-rotor clearance ⓒ

   Out of specification → Replace the oil pump.

① Inner rotor
② Outer rotor
③ Oil pump housing

Inner-rotor-to-outer-rotor-tip clearance
0.07 ~ 0.12 mm
(0.0028 ~ 0.0047 in)
<Limit>: 0.2 mm (0.008 in)
Outer-rotor-to-oil-pump-housing clearance
0.03 ~ 0.08 mm
(0.0012 ~ 0.0031 in)
<Limit>: 0.15 mm (0.0059 in)
Oil-pump-housing-to-inner-rotor-and-outer-rotor clearance
0.03 ~ 0.08 mm
(0.0012 ~ 0.0031 in)
<Limit>: 0.15 mm (0.0059 in)

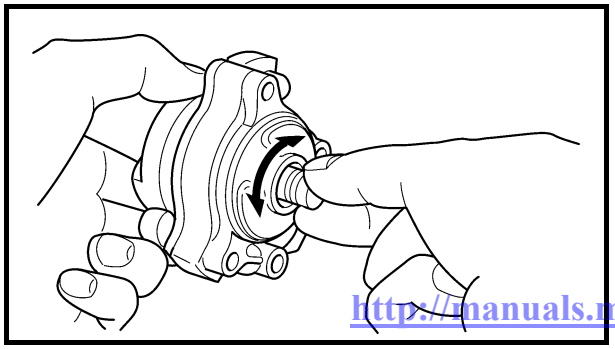

3. Check:
   - oil pump operation

   Rough movement → Repeat steps (1) and (2) or replace the defective part(s).

http://manuals.magnamaniac.com

EAS00367
CHECKING THE OIL DELIVERY PIPES AND HOSES

The following procedure applies to all of the oil delivery pipes and hoses.

1. Check:
   - oil delivery pipe
   - oil delivery hose
     Damage → Replace.
     Obstruction → Wash and blow out with compressed air.

EAS00375
ASSEMBLING THE OIL PUMP

1. Lubricate:
   - oil pump inner rotor 1
   - oil pump inner rotor 2
   - oil pump outer rotor 1
   - oil pump outer rotor 2
   - oil pump shaft
     (with the recommended lubricant)

	Recommended lubricant **Engine oil**

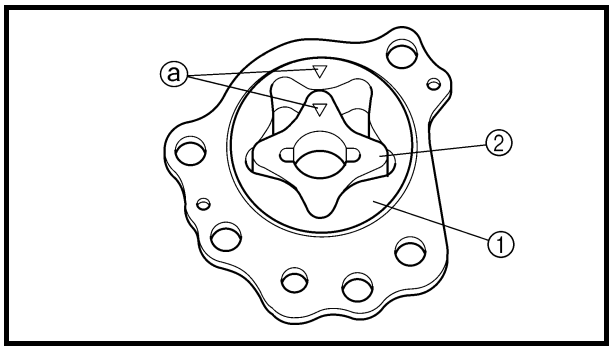

2. Install:
   - oil pump outer rotor 2 ①
   - oil pump inner rotor 2 ②
     (to the oil pump housing 2)
   - oil pump housing

7 Nm (0.7 m · kg, 5.1 ft · lb)

NOTE:

- Install oil pump inner rotor 2 and outer rotor 2 with the alignment marks ⓐ facing up.
- When installing the inner rotor, align the pin in the oil pump shaft with the groove in the inner rotor.

3. Check:
   - oil pump operation
     Refer to “CHECKING THE OIL PUMP”.

http://manuals.magnamaniac.com

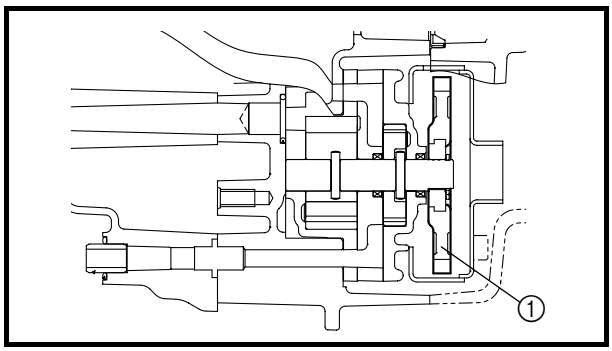

EAS00376
INSTALLING THE OIL PUMP

1. Install:
   - oil pump gasket New
   - oil pump
   - oil baffle plate 2

     10 Nm (1.0 m · kg, 7.2 ft · lb)
   - oil pump driven gear ①
   - oil pump driven gear circlip New
   - oil baffle plate 1

     4 Nm (0.4 m · kg, 2.9 ft · lb)

CAUTION:

After tightening the bolts, make sure the oil pump turns smoothly.

NOTE:

- Install the oil pump driven gear ① in the direction shown.
- Install the circlip with its blunt surface facing the engine.

http://manuals.magnamaniac.com

BALANCER DRIVEN GEAR

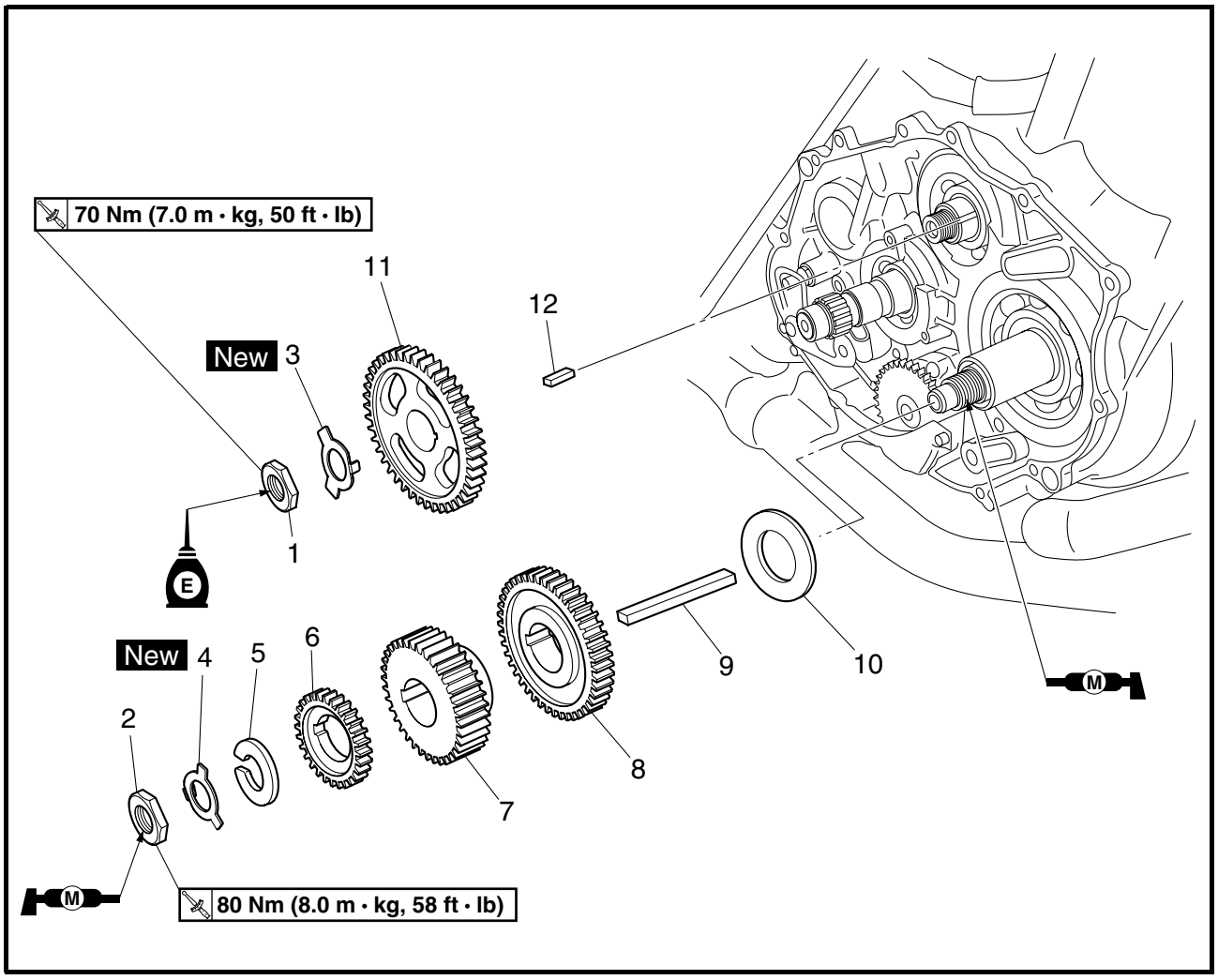

Order	Job/Part	Q'ty	Remarks
	Removing the balancer driven gear		Remove the parts in the order listed.
	Water pump assembly		Refer to "WATER PUMP" in chapter 6.
	Clutch housing		Refer to "CLUTCH".
	Crankcase cover (right)		Refer to "OIL PUMP".
1	Balancer driven gear nut	1	Refer to "REMOVING THE BALANCER DRIVEN GEAR AND BALANCER DRIVE GEAR" and "INSTALLING THE BALANCER DRIVEN GEAR AND BALANCER DRIVE GEAR.
2	Primary drive gear nut	1	
3	Lock washer	1	
4	Lock washer	1	Refer to "REMOVING THE BALANCER DRIVEN GEAR AND BALANCER DRIVE GEAR" and "INSTALLING THE BALANCER DRIVEN GEAR AND BALANCER DRIVE GEAR.
5	Washer	1	

http://manuals.magnamaniac.com

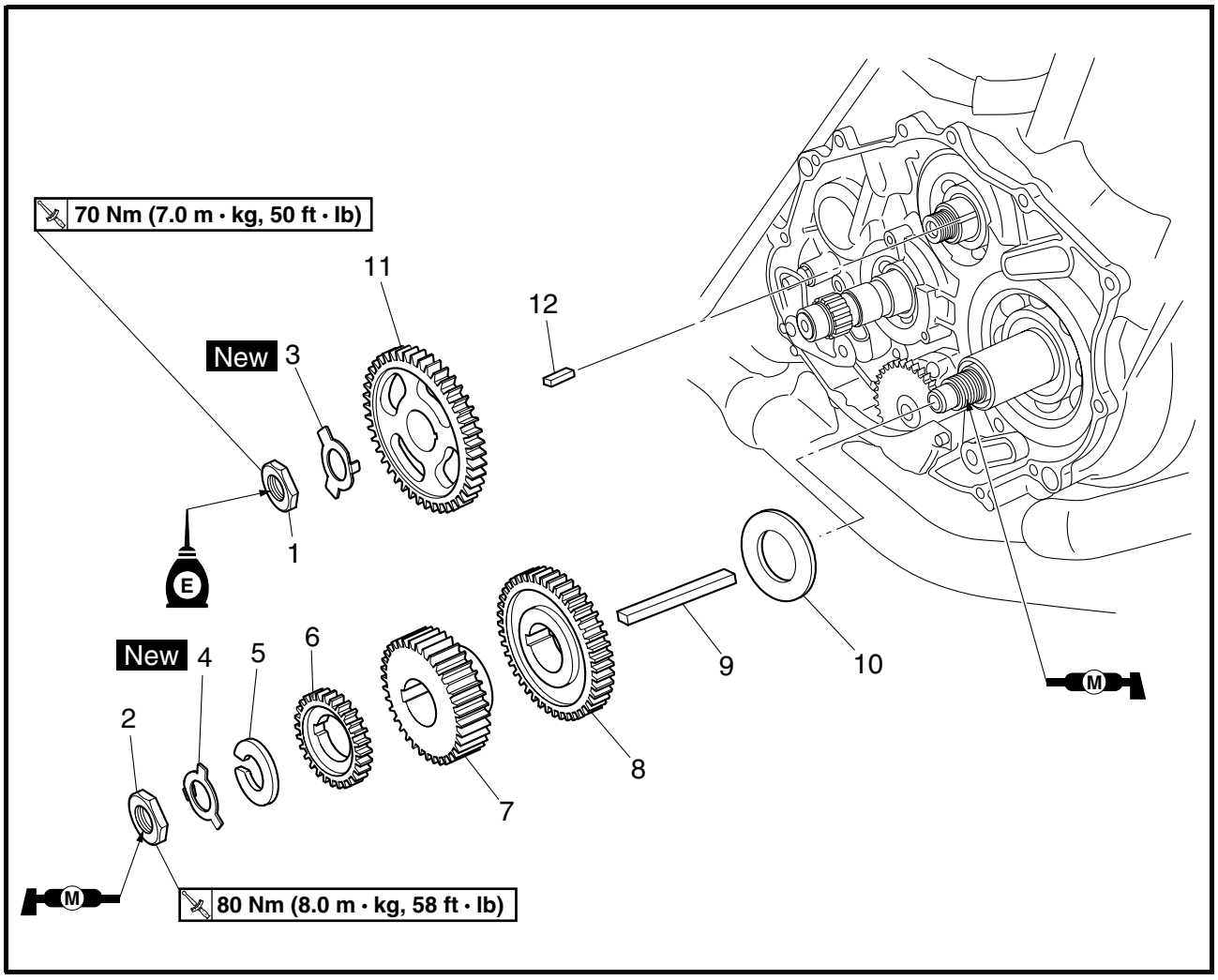

Order	Job/Part	Q'ty	Remarks
6	Water pump drive gear	1	
7	Primary drive gear	1	
8	Balancer drive gear	1	Refer to "INSTALLING THE BALANCER DRIVEN GEAR AND BALANCER DRIVE GEAR".
9	Straight key	1	
10	Washer	1	
11	Balancer driven gear	1	Refer to "INSTALLING THE BALANCER DRIVEN GEAR AND BALANCER DRIVE GEAR".
12	Straight key	1	For installation, reverse the removal procedure.

http://manuals.magnamaniac.com

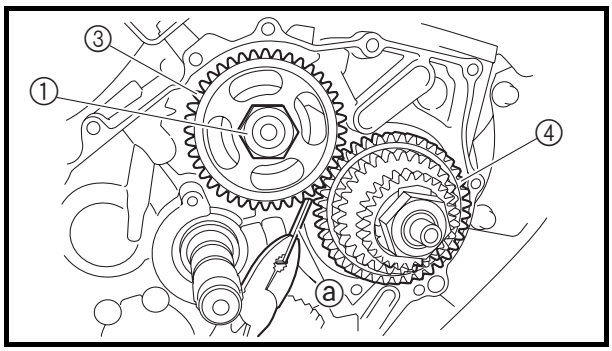

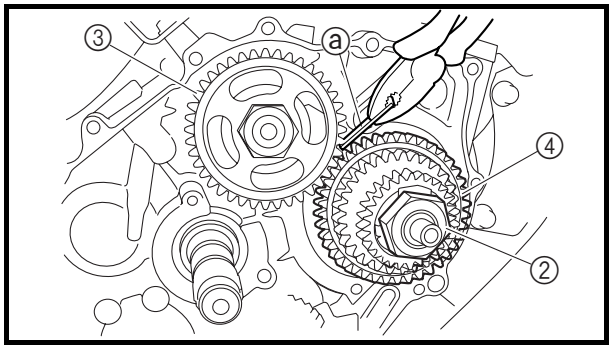

REMOVING THE BALANCER DRIVEN GEAR AND BALANCER DRIVE GEAR

1. Straighten the lock washer tab.
2. Loosen:
   - balancer driven gear nut ①
   - primary drive gear nut ②

NOTE:

Place an aluminum plate ⓐ between the teeth of the balancer driven gear ③ and balancer drive gear ④.

3. Remove:
   - balancer driven gear
   - water pump drive gear
   - primary drive gear
   - balancer drive gear

CHECKING THE BALANCER DRIVEN GEAR, WATER PUMP DRIVE GEAR, PRIMARY DRIVE GEAR, AND BALANCER DRIVE GEAR

1. Check:
   - balancer driven gear
   - balancer drive gear
   - water pump drive gear
   - primary drive gear

   Damage/wear → Replace.

http://manuals.magnamaniac.com

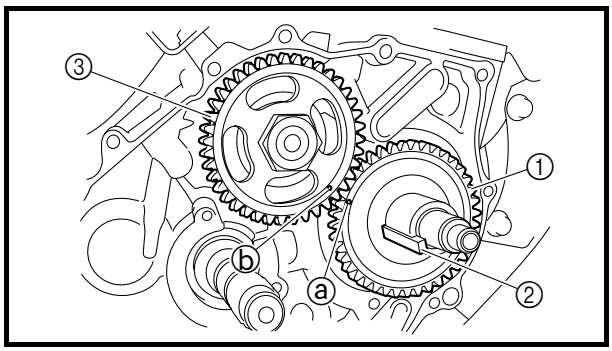

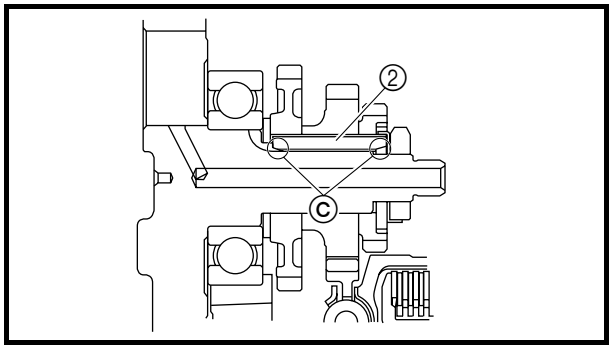

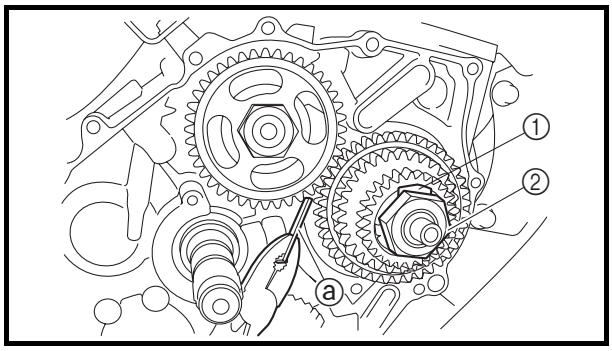

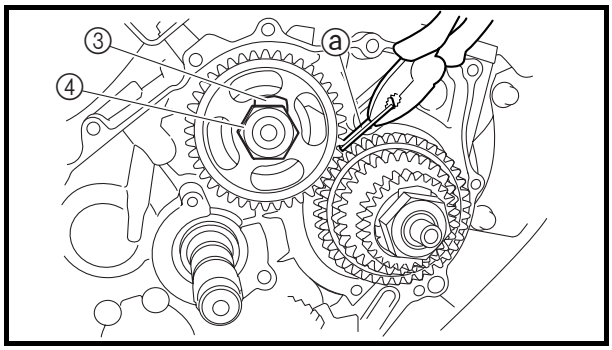

INSTALLING THE BALANCER DRIVEN GEAR AND BALANCER DRIVE GEAR

1. Install:
   - washer
   - balancer drive gear ①
   - straight key ②
   - balancer driven gear ③
   - straight key
   - primary drive gear
   - water pump drive gear

NOTE:

- Align the punch mark ⓐ on the balancer drive gear with the punch mark ⓑ on the balancer driven gear.
- Install the key with its blunt surface facing ⓒ the crankshaft.

2. Install:
   - lock washer ① New
   - primary drive gear nut ②

     80 Nm (8.0 m · kg, 58 ft · lb)
   - lock washer ③ New
   - balancer driven gear nut ④

     70 Nm (7.0 m · kg, 50 ft · lb)

NOTE:

Place an aluminum plate ⓐ between the teeth of the balancer drive gear and balancer driven gear.

3. Bend the lock washer tab.

http://manuals.magnamaniac.com

EAS00327
SHIFT SHAFT
SHIFT SHAFT AND STOPPER LEVER

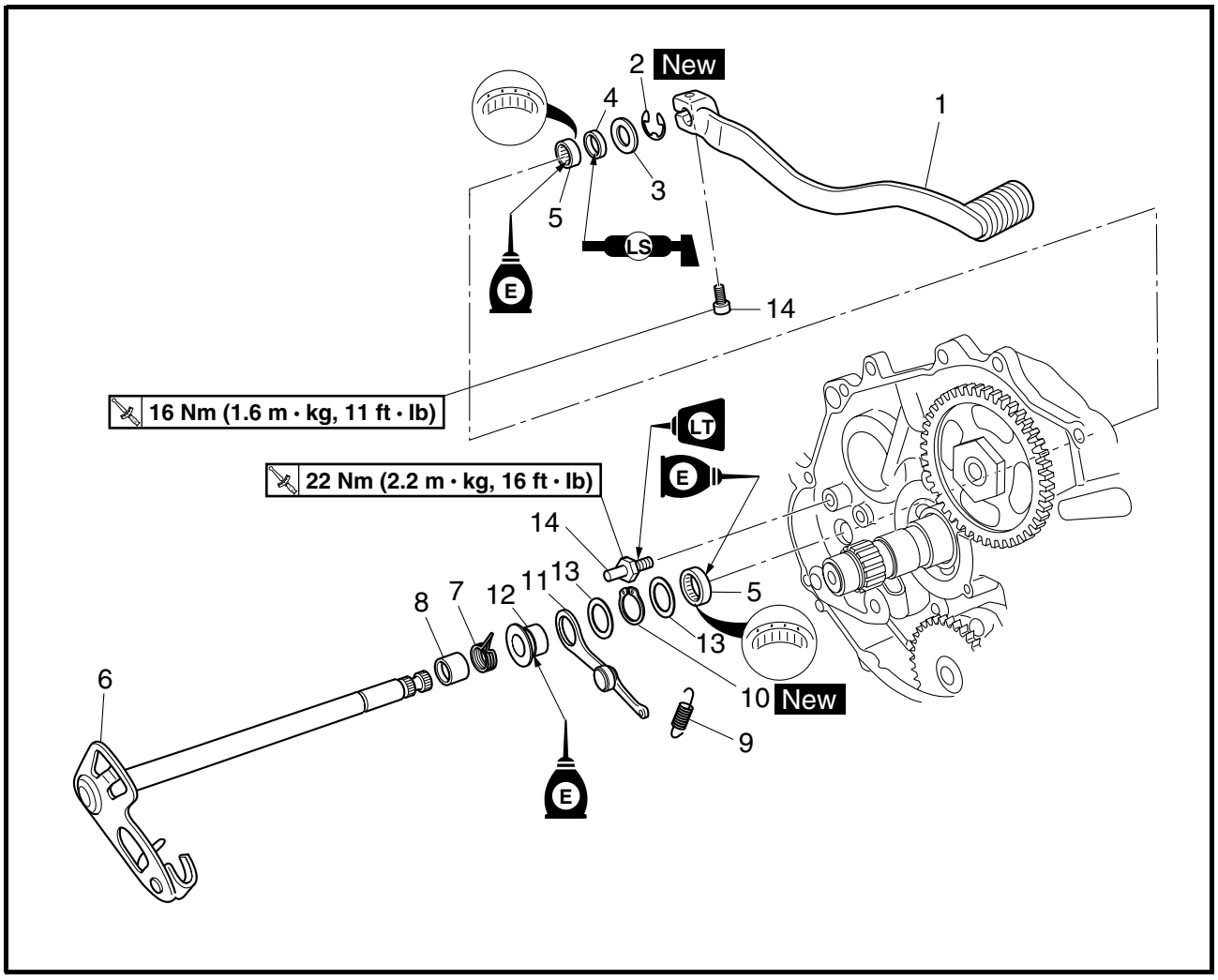

Order	Job/Part	Q'ty	Remarks
	Removing the shift shaft and stopper lever		Remove the parts in the order listed.
	Water pump assembly		Refer to "WATER PUMP" in chapter 6.
	Clutch housing		Refer to "CLUTCH".
	Crankcase cover (right)		Refer to "OIL PUMP".
1	Shift pedal	1	
2	Circlip	1	
3	Washer	1	
4	Oil seal	1	
5	Bearing	2	
6	Shift shaft	1	Refer to "INSTALLING THE SHIFT SHAFT".
7	Shift shaft spring	1	
8	Spacer	1	

http://manuals.magnamaniac.com

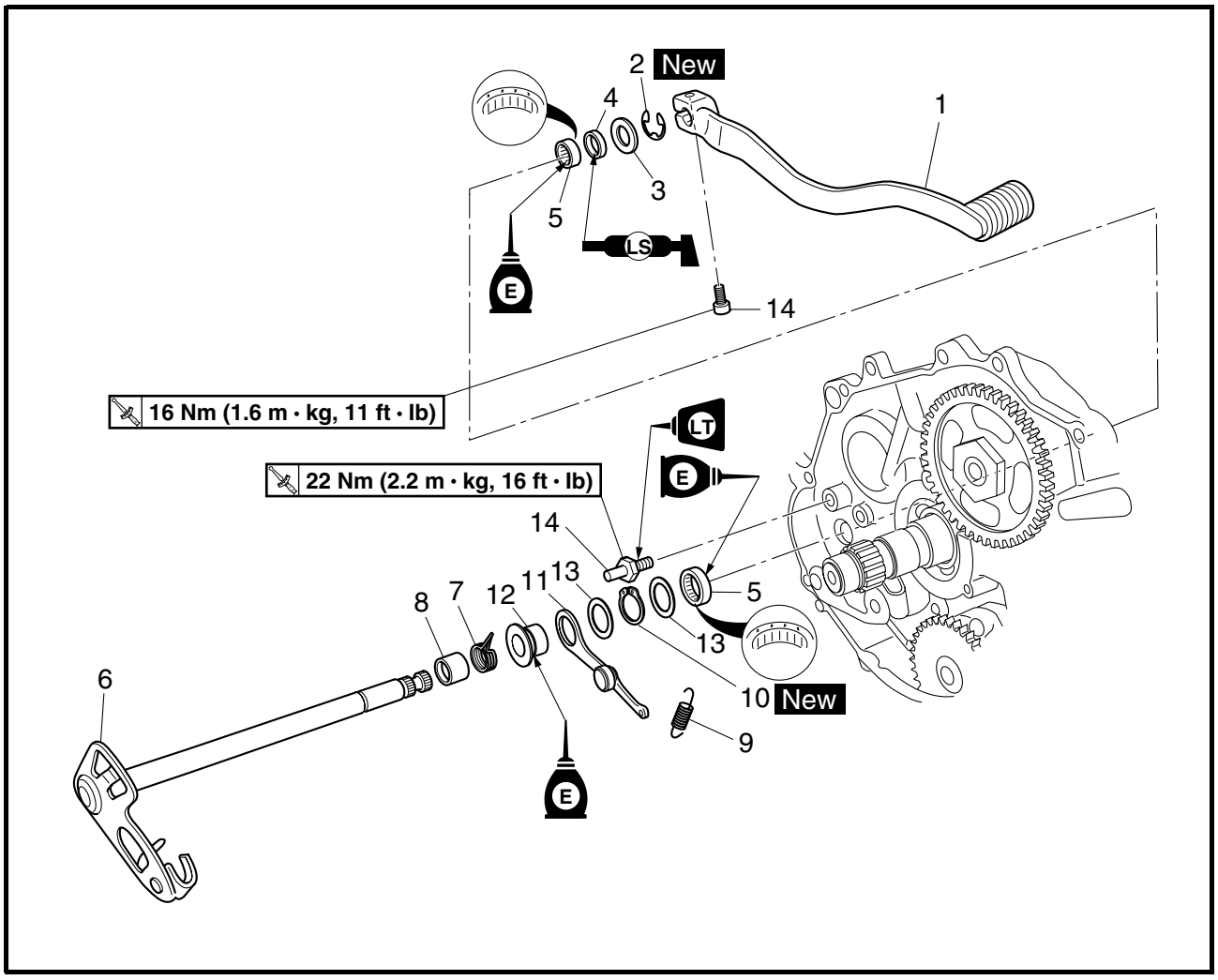

Order	Job/Part	Q'ty	Remarks
9	Stopper lever spring	1	Refer to "INSTALLING THE SHIFT SHAFT".
10	Circlip	1	
11	Stopper lever	1	Refer to "INSTALLING THE SHIFT SHAFT".
12	Spacer	1	
13	Washer	2	
14	Shift shaft spring stopper	1	
			For installation, reverse the removal procedure.

http://manuals.magnamaniac.com

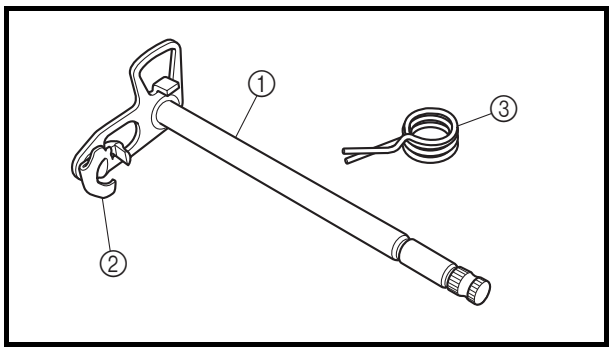

EAS00329
CHECKING THE SHIFT SHAFT

1. Check:
   - shift shaft ①
   - shift shaft pawl ②
     Bends/damage/wear → Replace.
   - shift shaft spring ③
     Damage/wear → Replace.

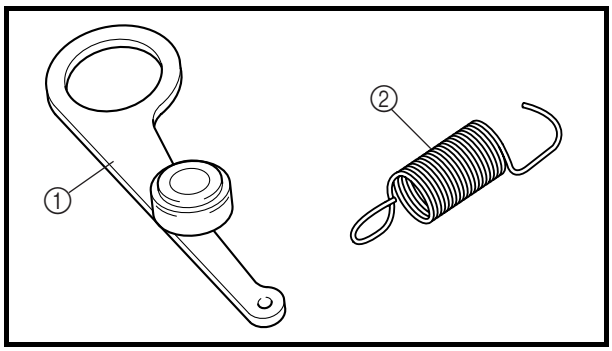

EAS00330
CHECKING THE STOPPER LEVER

1. Check:
   - stopper lever ①
     Bends/damage → Replace.
     Roller turns roughly → Replace the stopper lever.
   - stopper lever spring ②
     Damage/wear → Replace.

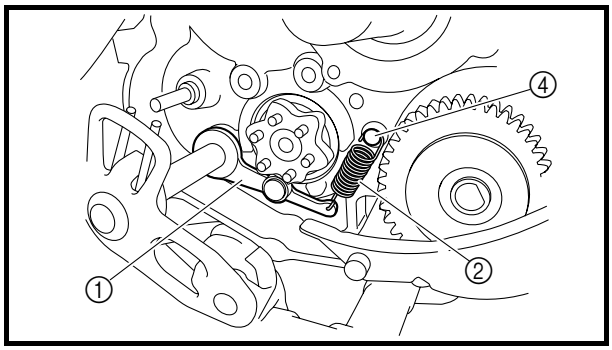

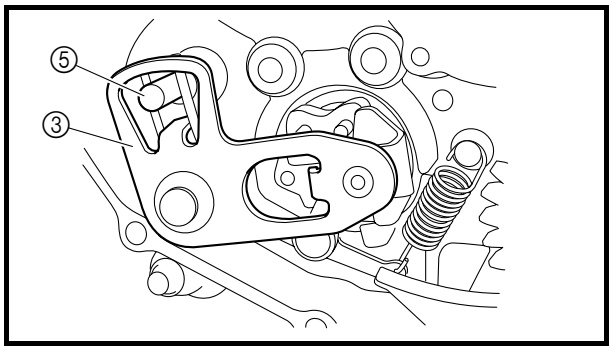

EAS00331
INSTALLING THE SHIFT SHAFT

1. Install:
   - shift shaft spring stopper
     22 Nm (2.2 m · kg, 16 ft · lb)
2. Install:
   - stopper lever ①
   - stopper lever spring ②
   - shift shaft ③

NOTE:

- Hook the ends of the stopper lever spring onto the stopper lever and the crankcase boss ④.
- Mesh the stopper lever with the shift drum segment assembly.
- Lubricate the oil seal lips with lithium-soap-based grease.
- Hook the end of the shift shaft spring onto the shift shaft spring stopper ⑤.

3. Install:
   - shift pedal **16 Nm (1.6 m · kg, 11 ft · lb)**
     Refer to “ADJUSTING THE SHIFT PEDAL” in chapter 3.

http://manuals.magnamaniac.com

EAS00341
STARTER CLUTCH AND A.C. MAGNETO

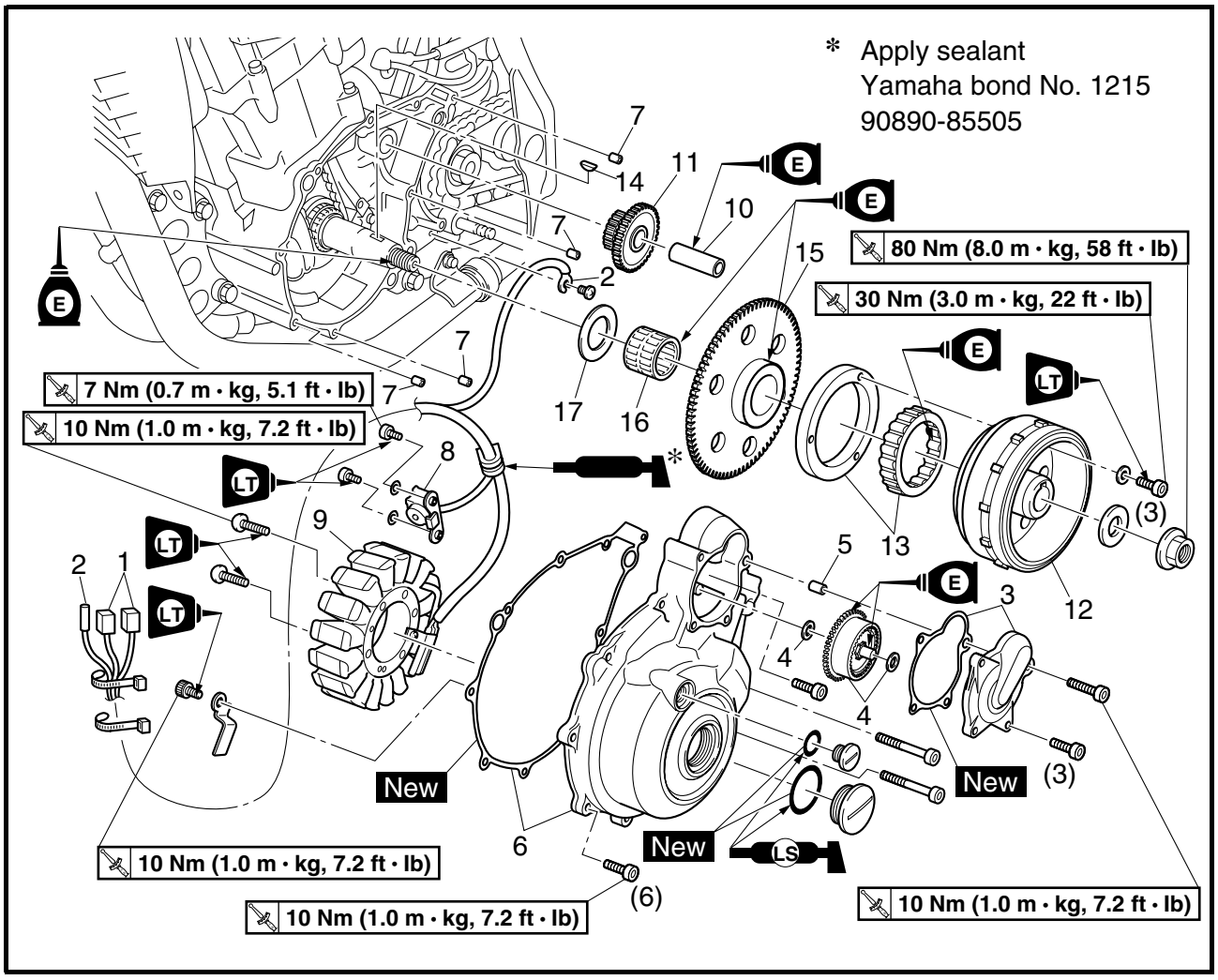

Order	Job/Part	Q'ty	Remarks
	Removing the starter clutch and A.C. magneto		Remove the parts in the order listed.
	Engine oil		Drain. Refer to "CHECKING AND CHANGING THE ENGINE OIL" in chapter 3.
	Seat/left side panel		Refer to "COWLING AND COVER" in chapter 3.
	Starter motor		Refer to "STARTER MOTOR" in chapter 8.
	Drive sprocket cover		Refer to "SWINGARM AND DRIVE CHAIN" in chapter 4.
	Shift pedal		Refer to "SHIFT SHAFT".
1	A.C. magneto coupler	2	Disconnect.
2	Neutral switch connector/lead	1/1	Disconnect.
3	Torque limiter cover/gasket	1/1	Refer to "REMOVING THE A.C. MAGNETO ROTOR".

http://manuals.magnamotor.com

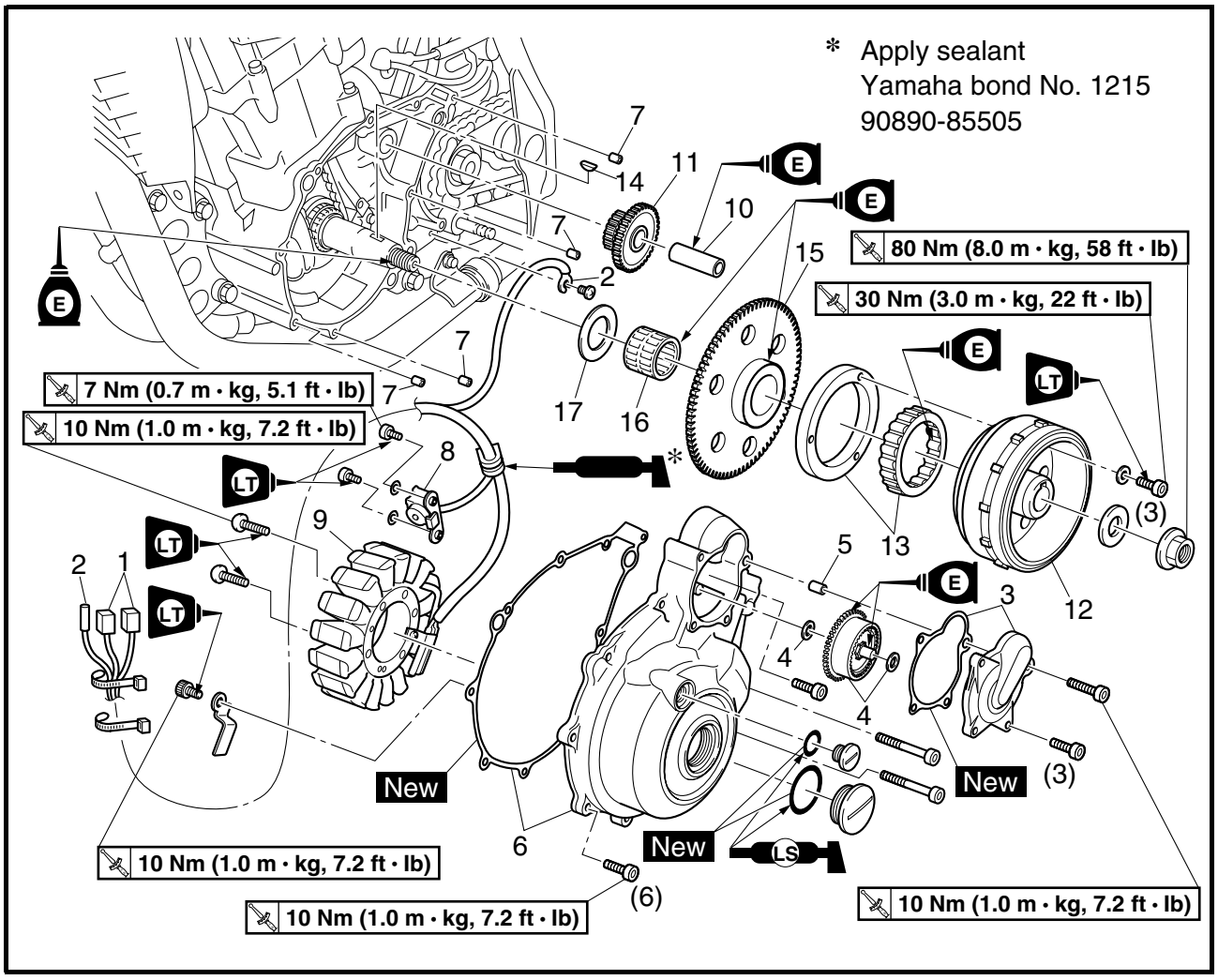

Order	Job/Part	Q'ty	Remarks
4	Torque limiter/washer	1/2	
5	Dowel pin	1	
6	A.C. magneto cover/gasket	1/1	
7	Dowel pin	4	
8	Crankshaft position sensor	1	
9	Stator coil	1	Refer to "REMOVING THE A.C. MAGNETO ROTOR" and "INSTALLING THE A.C. MAGNETO ROTOR".
10	Starter clutch idle gear shaft	1	
11	Starter clutch idle gear	1	
12	A.C. magneto rotor	1	
13	Starter clutch	1	
14	Woodruff key	1	
15	Starter clutch gear	1	
16	Bearing	1	
17	Washer	1	
			For installation, reverse the removal procedure.

http://manuals.magnamaniac.com

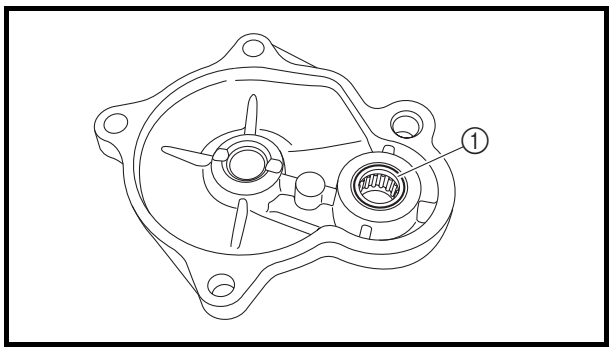

EAS00346
REMOVING THE A.C. MAGNETO ROTOR

1. Remove:
   - torque limiter cover

CAUTION:

Do not remove the bearing ①.

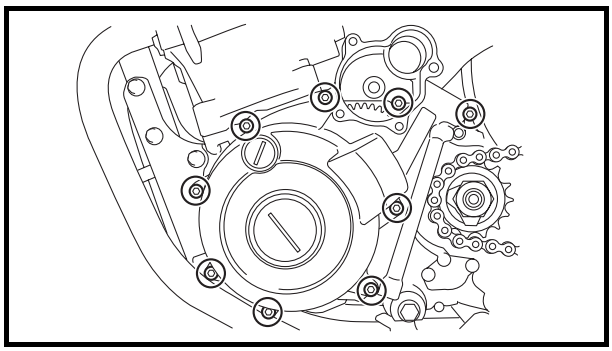

2. Remove:
   - A.C. magneto cover

NOTE:

Loosen each bolt 1/4 of a turn at a time, in stages and in a crisscross pattern. After all of the bolts are fully loosened, remove them.

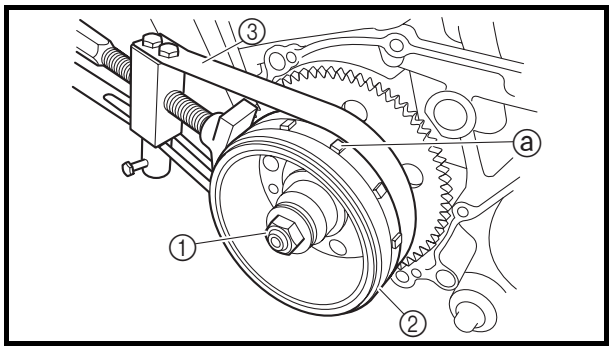

3. Remove:
   - A.C. magneto rotor nut ①
   - washer

NOTE:

- While holding the A.C. magneto rotor ② with the sheave holder ③, loosen the A.C. magneto rotor nut.
- Do not allow the sheave holder to touch the projection ⓐ on the A.C. magneto rotor.

	Sheave holder **90890-01701**

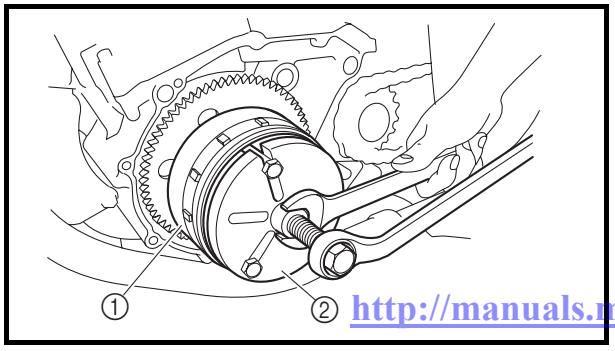

4. Remove:
   - A.C. magneto rotor ①
     (with the flywheel puller ②)
   - woodruff key

NOTE:

Use the rotor puller.

	Flywheel puller **90890-01362**

http://manuals.magnamaniac.com

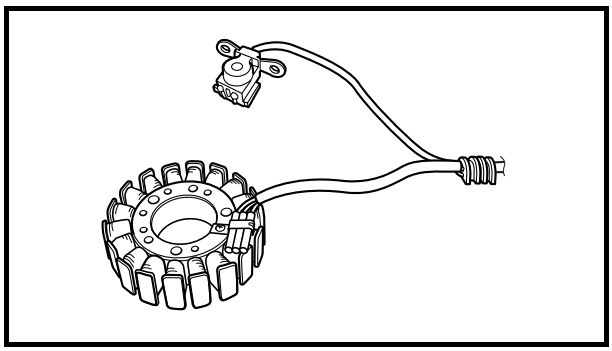

CHECKING THE STATOR COIL AND CRANKSHAFT POSITION SENSOR

1. Check:
   - stator coil
   - crankshaft position sensor
     Damage → Replace the crankshaft position sensor/stator assembly.

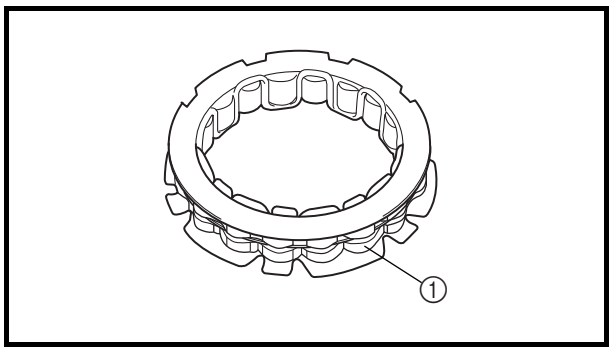

EAS00351

CHECKING THE STARTER CLUTCH

1. Check:
   - starter clutch rollers ①
     Damage/wear → Replace.

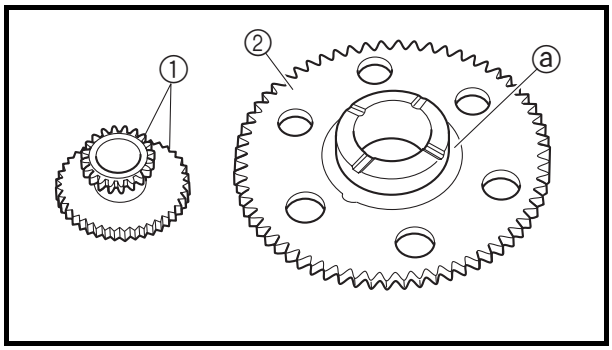

2. Check:
   - starter clutch idle gear ①
   - starter clutch gear ②
     Burrs/chips/roughness/wear → Replace the defective part(s).
3. Check:
   - starter clutch gear's contacting surfaces ⓐ
     Damage/pitting/wear → Replace the starter clutch gear.

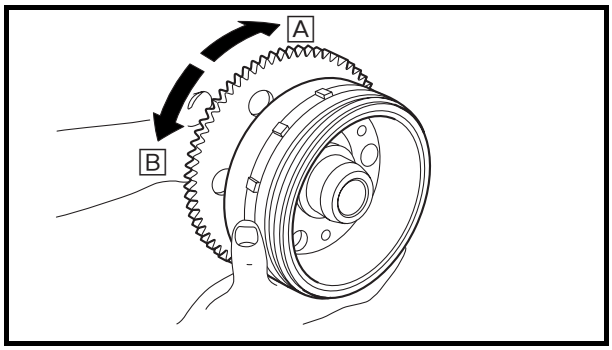

4. Check:
   - starter clutch operation

▼▼▼▼▼▼▼▼▼▼▼▼▼▼▼▼▼▼▼▼▼▼▼▼▼▼▼▼▼▼▼▼▼▼

a. Install the starter clutch gear onto the starter clutch and hold the starter clutch.
b. When turning the starter clutch gear clockwise [A], it should turn freely, otherwise the starter clutch is faulty and must be replaced.
c. When turning the starter clutch gear counterclockwise [B], the starter clutch and the starter clutch gear should engage, otherwise the starter clutch is faulty and must be replaced.

▲▲▲▲▲▲▲▲▲▲▲▲▲▲▲▲▲▲▲▲▲▲▲▲▲▲▲▲▲▲▲▲▲▲

http://manuals.magnamaniac.com

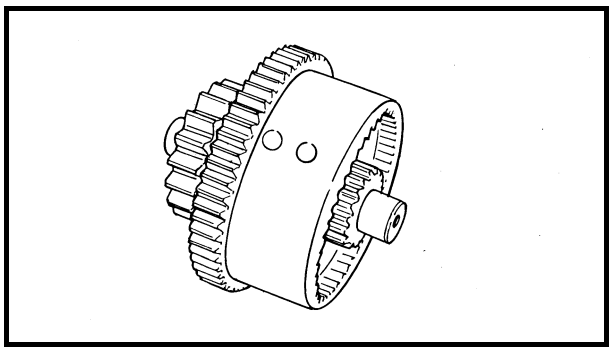

CHECKING THE TORQUE LIMITER

1. Check:
   - torque limiter
     Damage/wear → Replace.

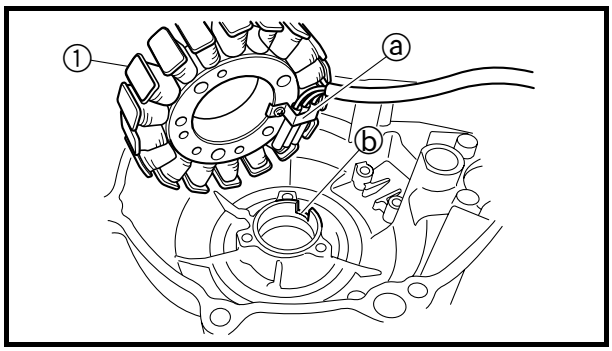

EAS00354

INSTALLING THE A.C. MAGNETO ROTOR

1. Install:
   - stator coil ①
     10 Nm (1.0 m · kg, 7.2 ft · lb)
   - crankshaft position sensor
     7 Nm (0.7 m · kg, 5.1 ft · lb)

NOTE:

Align the projection ⓐ on the stator coil with the slot ⓑ in the A.C. magneto cover.

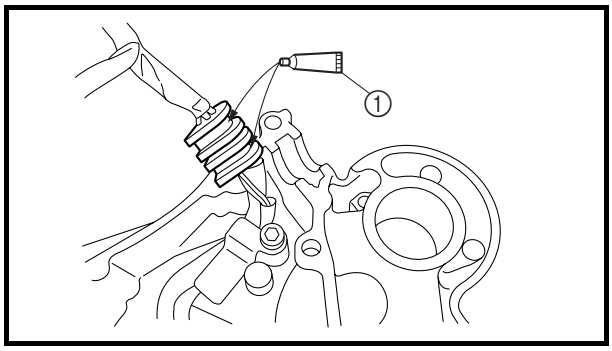

2. Apply:
   - Yamaha bond No. 1215 ①
     (into the slits)

	Yamaha bond No. 1215 **90890-85505**

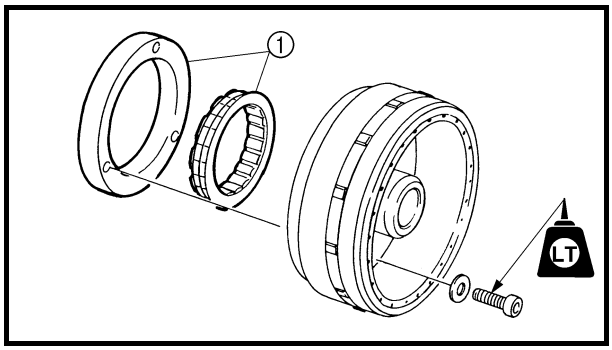

3. Install:
   - starter clutch ①
     (to A.C. magneto rotor)
   - starter clutch bolts
     30 Nm (3.0 m · kg, 22 ft · lb)
4. Install:
   - woodruff key
   - A.C. magneto rotor
   - washer
   - A.C. magneto rotor nut

NOTE:

- Clean the tapered portion of the crankshaft and the A.C. magneto rotor hub.
- When installing the A.C. magneto rotor, make sure the woodruff key is properly seated in the keyway of the crankshaft.
- Lubricate crankshaft end threads with engine oil.

http://manuals.magnamaniac.com

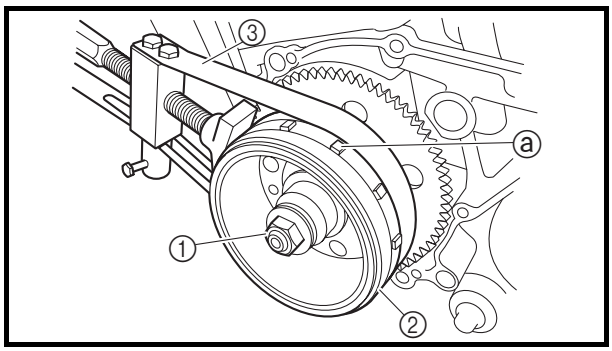

5. Tighten:
   - A.C. magneto rotor nut ①

80 Nm (8.0 m · kg, 58 ft · lb)

NOTE:
- While holding the A.C. magneto rotor ② with the sheave holder ③, tighten the A.C. magneto rotor nut.
- Do not allow the sheave holder to touch the projection ⓐ on the A.C. magneto rotor.

Sheave holder
90890-01701

6. Install:
   - gasket New
   - A.C. magneto cover

10 Nm (1.0 m · kg, 7.2 ft · lb)

NOTE:
Tighten the A.C. magneto cover bolts in stages, using a crisscross pattern.

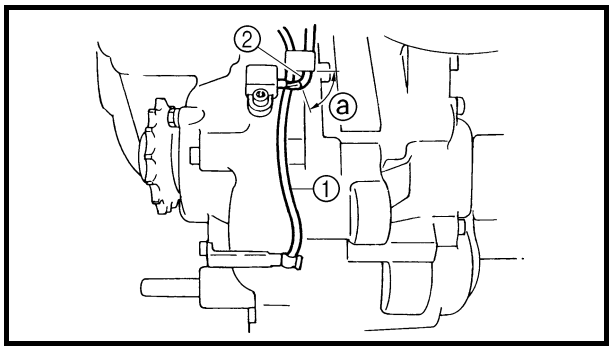

7. Install:
   - neutral switch lead ①

NOTE:
Route the neutral switch lead so that it is taut and route it under the speed sensor lead ② as shown.

ⓐ 5 mm or more

http://manuals.magnamaniac.com

CRANKCASE

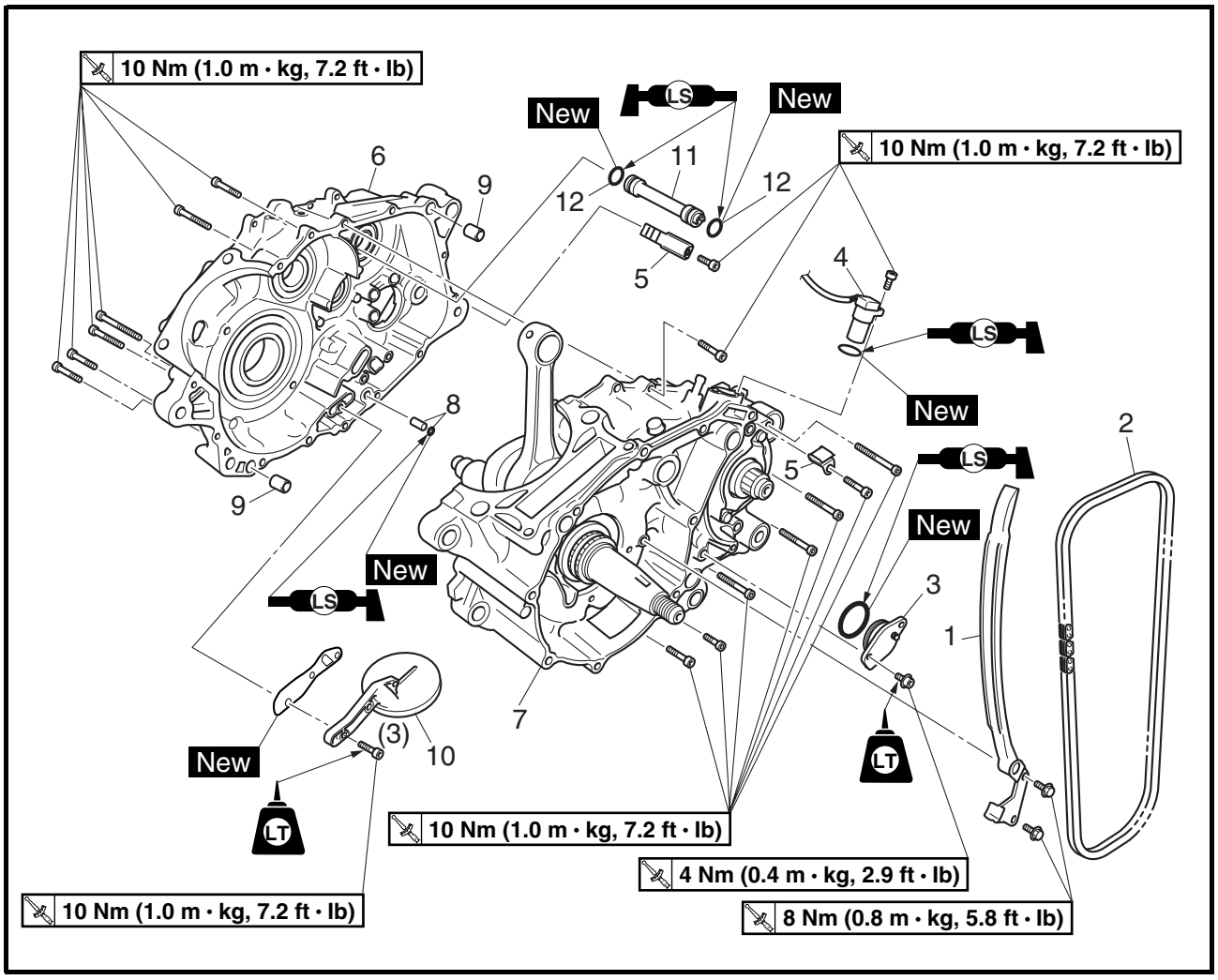

Order	Job/Part	Q'ty	Remarks
	Separating the crankcase		Remove the parts in the order listed.
	Engine		Refer to "ENGINE REMOVAL".
	Cylinder head		Refer to "CYLINDER HEAD".
	Cylinder/piston		Refer to "CYLINDER AND PISTON".
	A.C. magneto		Refer to "STARTER CLUTCH AND A.C. MAGNETO".
	Clutch		Refer to "CLUTCH".
	Balancer driven gear/balancer drive gear		Refer to "BALANCER DRIVEN GEAR".
	Oil pump		Refer to "OIL PUMP".
	Shift shaft		Refer to "SHIFT SHAFT".
1	Timing chain guide (intake side)	1	
2	Timing chain	1	
3	Neutral switch	1	
4	Speed sensor	1	

http://manuals.magnamaniac.com

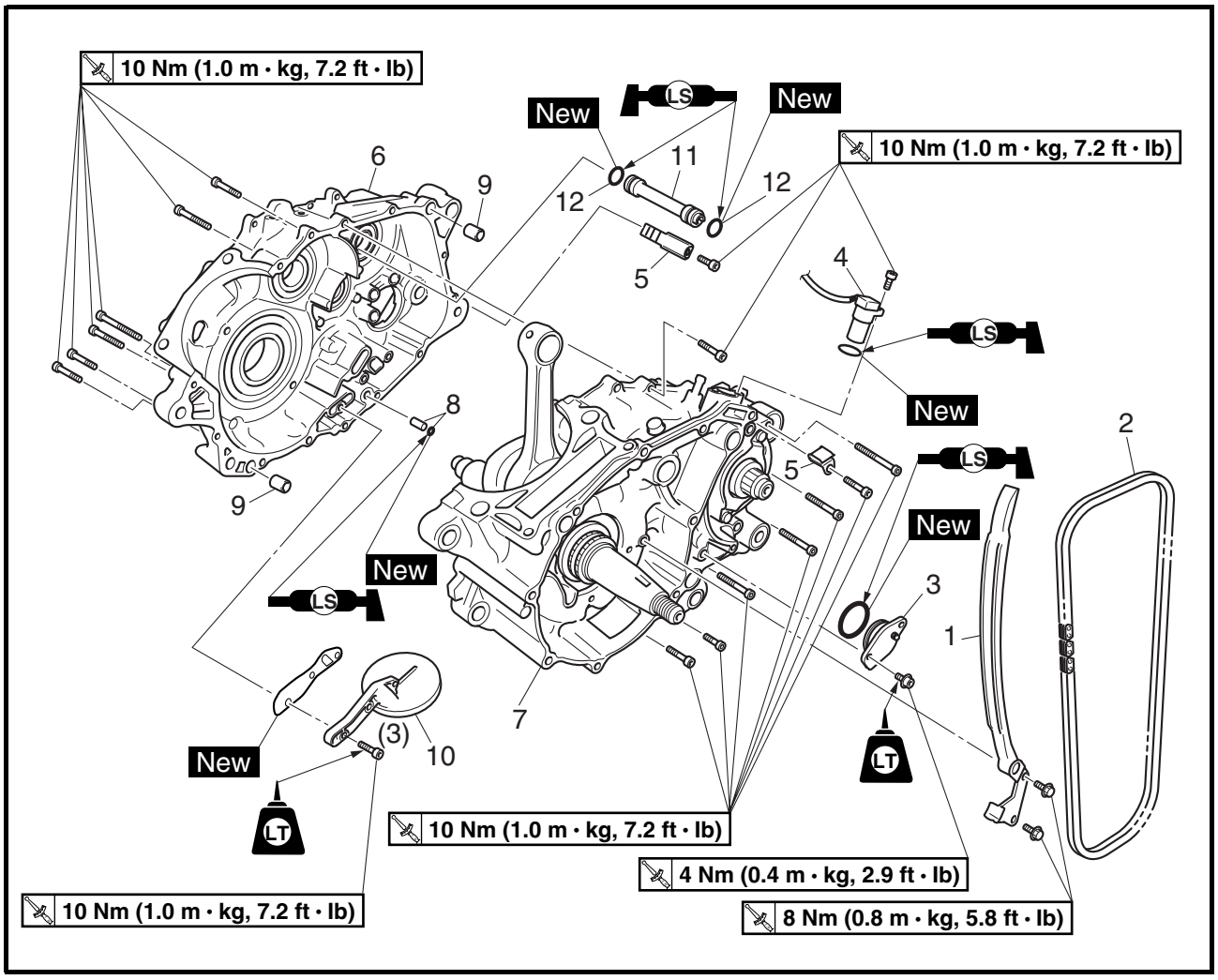

Order	Job/Part	Q'ty	Remarks
5	Lead holder	2	
6	Crankcase (right)	1	Refer to "SEPARATING THE CRANKCASE".
7	Crankcase (left)	1	
8	Dowel pin/O-ring	1/1	
9	Dowel pin	2	
10	Oil strainer	1	
11	Oil delivery pipe 3	1	
12	O-ring	2	
			For installation, reverse the removal procedure.

http://manuals.magnamaniac.com

CRANKCASE BEARINGS

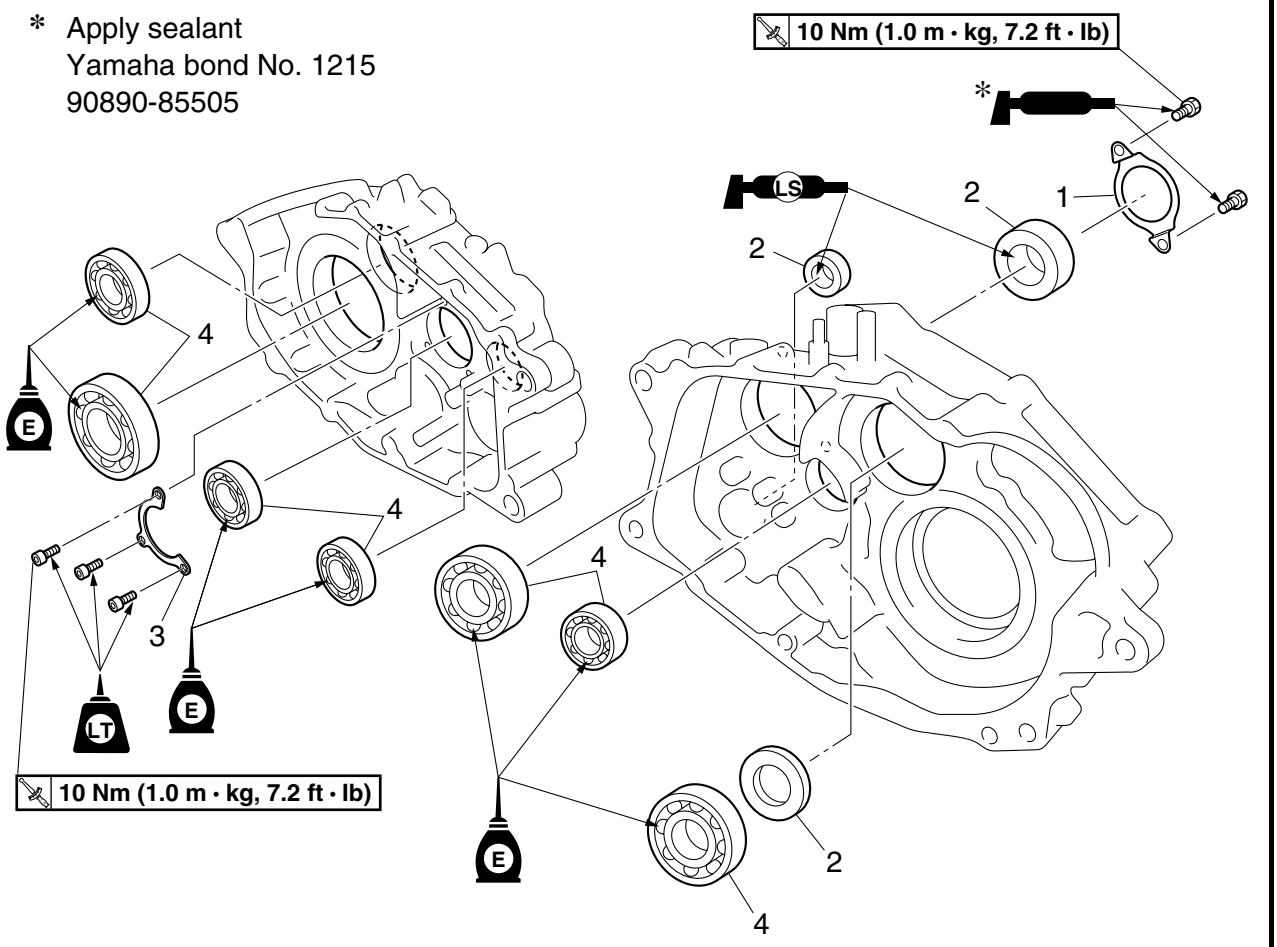

Order	Job/Part	Q'ty	Remarks
	Removing the crankcase bearings		Remove the parts in the order listed.
	Crankshaft/balancer		Refer to "CRANKSHAFT".
	Transmission		Refer to "TRANSMISSION".
1	Oil seal holder	1	
2	Oil seal	3	
3	Bearing retainer	1	
4	Bearing	7	
			For installation, reverse the removal procedure.

http://manuals.magnamaniac.com

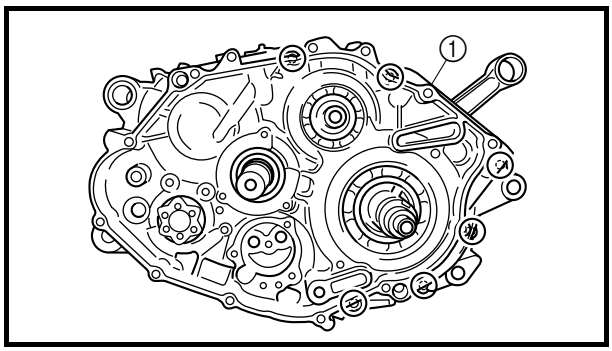

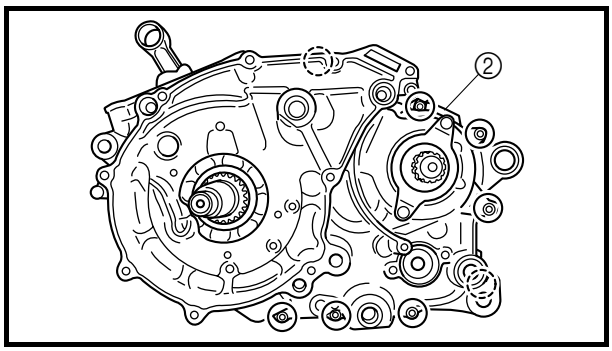

SEPARATING THE CRANKCASE

1. Separate:
   - right crankcase ①
   - left crankcase ②

▼▼▼▼▼▼▼▼▼▼▼▼▼▼▼▼▼▼▼▼▼▼▼▼▼▼▼▼▼▼▼▼

a. Remove the crankcase bolts.

NOTE:

- Loosen each bolt 1/4 of a turn at a time and after all the bolts are loosened, remove them.
- Loosen the bolts in stages, using a criss-cross pattern.

b. Remove the right crankcase.

NOTE:

Insert a screwdriver or pry bar into the pry points in the crankcase and then carefully pry apart the crankcase halves.

CAUTION:

Use a soft hammer to tap on one side of the crankcase. Tap only on reinforced portions of the crankcase. Do not tap on the crankcase mating surfaces. Work slowly and carefully. Make sure that the crankcase halves separate evenly.

c. Remove the dowel pins and O-ring.

▲▲▲▲▲▲▲▲▲▲▲▲▲▲▲▲▲▲▲▲▲▲▲▲▲▲▲▲▲▲▲▲

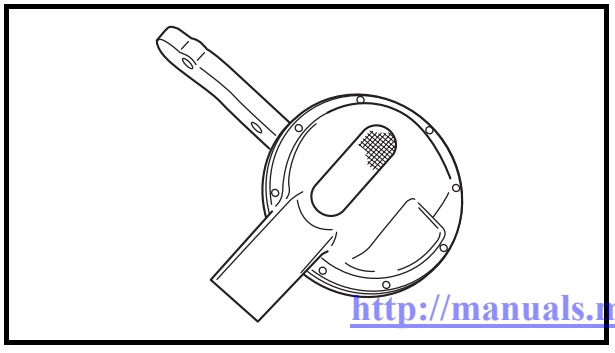

CHECKING THE OIL STRAINER AND OIL DELIVERY PIPE 3

1. Check:
   - oil strainer
     Damage → Replace.
     Contaminants → Clean with engine oil.

http://manuals.magnamaniac.com

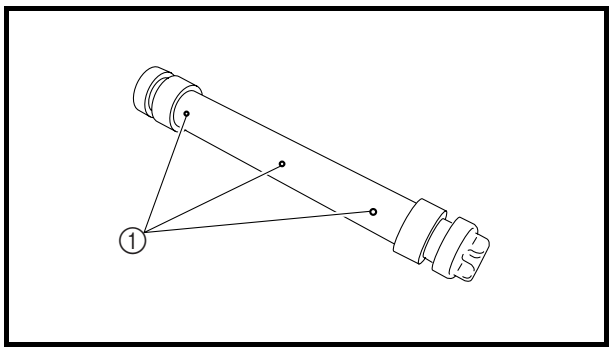

2. Check:
   - oil delivery pipe 3
     Cracks/damage → Replace.
   - oil delivery pipe holes ①
     Clogged → Blow out with compressed air.

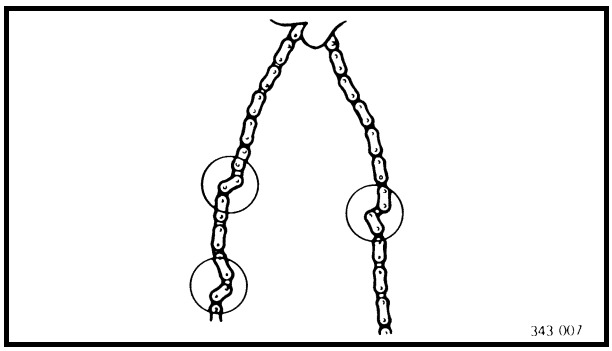

EAS00207
CHECKING THE TIMING CHAIN AND TIMING CHAIN GUIDES

1. Check:
   - timing chain
     Damage/stiffness → Replace the timing chain and camshaft sprocket as a set.
2. Check:
   - timing chain guide (intake side)
     Damage/wear → Replace.

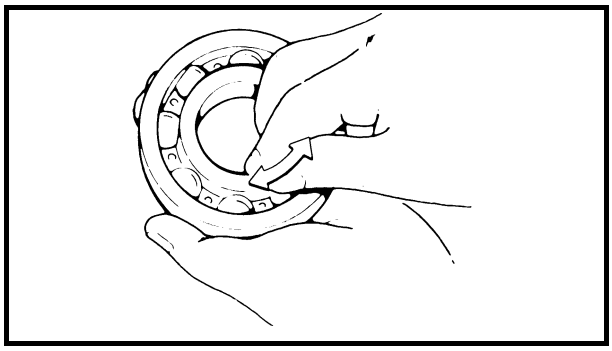

EAS00401
CHECKING THE BEARINGS AND OIL SEALS

1. Check:
   - bearings
     Clean and lubricate the bearings, and then rotate the inner race with your finger.
     Rough movement → Replace.
2. Check:
   - oil seals
     Damage/wear → Replace.

EAS00399
CHECKING THE CRANKCASE

1. Thoroughly wash the crankcase halves in a mild solvent.
2. Thoroughly clean all the gasket surfaces and crankcase mating surfaces.
3. Check:
   - crankcase
     Cracks/damage → Replace.
   - oil delivery passages
     Obstruction → Blow out with compressed air.

http://manuals.magnamaniac.com

EAS00418
ASSEMBLING THE CRANKCASE

1. Lubricate:
   - bearings
   - oil seals

	Recommended lubricant **Bearing** **Engine oil** **Oil seal** **Lithium-soap-based grease**

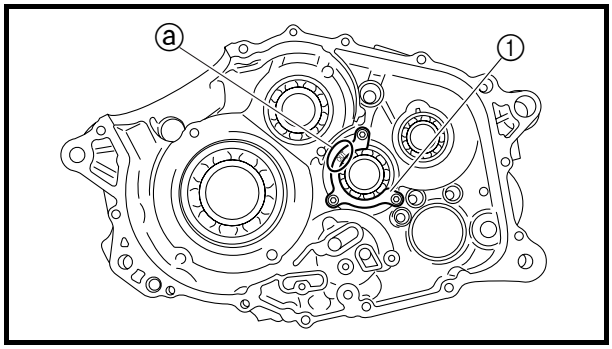

2. Install:
   - bearings New
   - bearing retainer ①
     (to the right crankcase)
   - bearing retainer bolts

10 Nm (1.0 m · kg, 7.2 ft · lb)

NOTE:
Install the bearing retainer with the "OUT" mark ⓐ facing up.

3. Thoroughly clean all the gasket mating surfaces and crankcase mating surfaces.

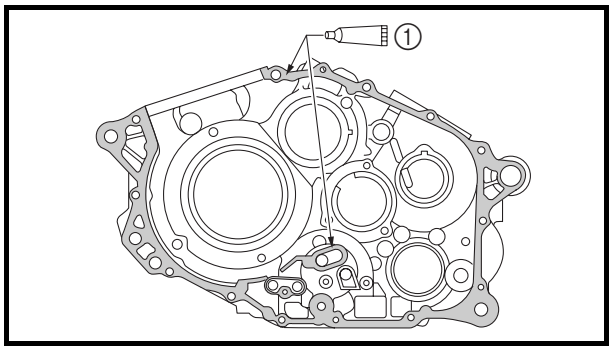

4. Apply:
   - Yamaha bond No. 1215 ①
     (to the mating surfaces of both crankcase halves)

	Yamaha bond No. 1215 **90890-85505**

NOTE:
Do not allow any sealant to come into contact with the oil gallery.

5. Install:
   - dowel pins
   - O-rings New

http://manuals.magnamaniac.com

6. Fit the right crankcase onto the left crankcase. Tap lightly on the case with a soft hammer.

CAUTION:

Before installing and torquing the crankcase bolts, be sure to check whether the transmission is functioning properly by manually rotating the shift drum in both directions.

A

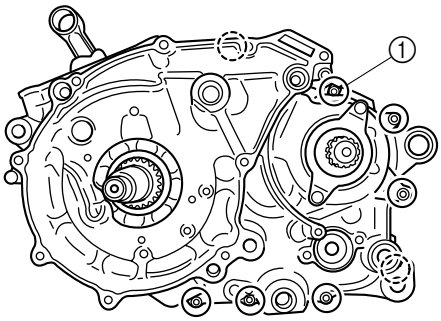

B

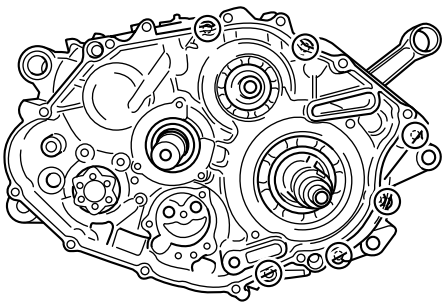

7. Install:
   - lead holder ①
   - crankcase bolts

A Left crankcase
B Right crankcase

8. Tighten:
   - crankcase bolts
     (follow the proper tightening sequence)

10 Nm (1.0 m · kg, 7.2 ft · lb)

NOTE:

Tighten the bolts in stages, using a crisscross pattern.

9. Apply:
   - 4-stroke engine oil
     (to the crankshaft pin, bearing, and oil delivery hole)
10. Check:
   - crankshaft and transmission operation
     Unsmooth operation → Repair.
11. Install:
   - speed sensor

10 Nm (1.0 m · kg, 7.2 ft · lb)

   - neutral switch
   - neutral switch screw

4 Nm (0.4 m · kg, 2.9 ft · lb)

http://manuals.magnamaniac.com

EAS00381
CRANKSHAFT
CRANKSHAFT AND BALANCER

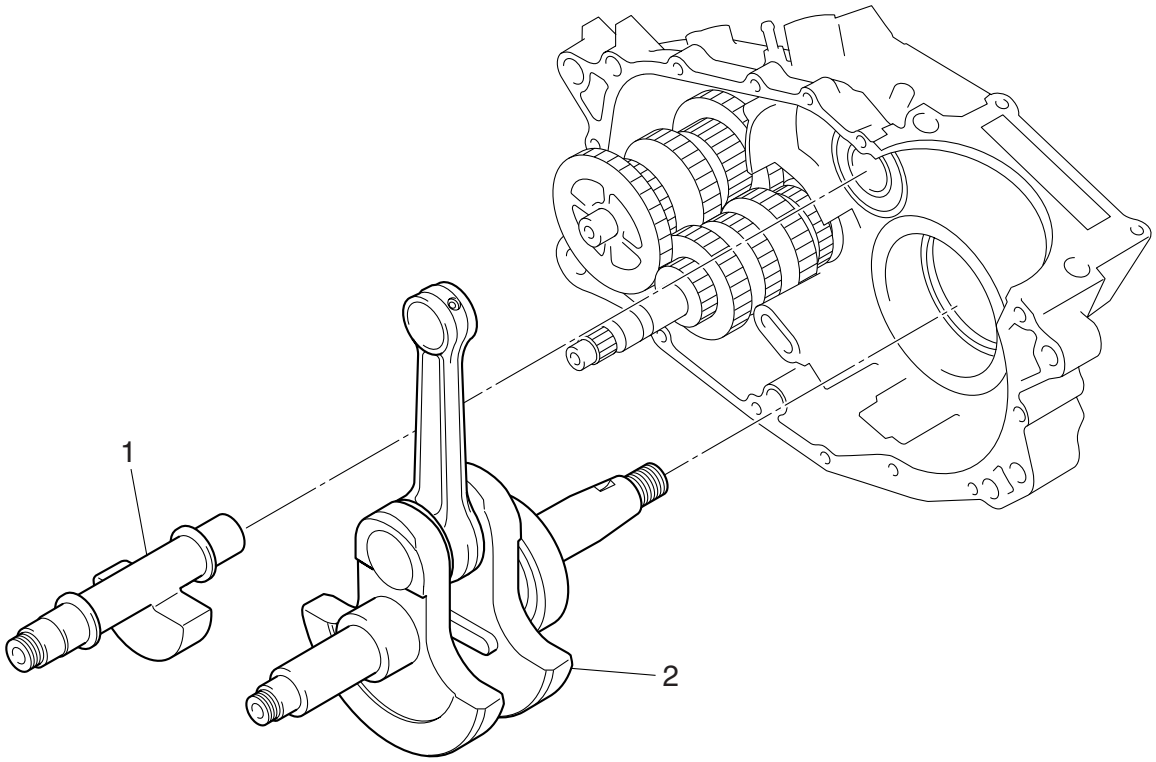

Order	Job/Part	Q'ty	Remarks
	Removing the crankshaft and balancer		Remove the parts in the order listed.
	Crankcase		Separate. Refer to "CRANKCASE".
1	Balancer	1	
2	Crankshaft	1	Refer to "REMOVING THE CRANKSHAFT ASSEMBLY" and "INSTALLING THE CRANKSHAFT". For installation, reverse the removal procedure.

http://manuals.magnamaniac.com

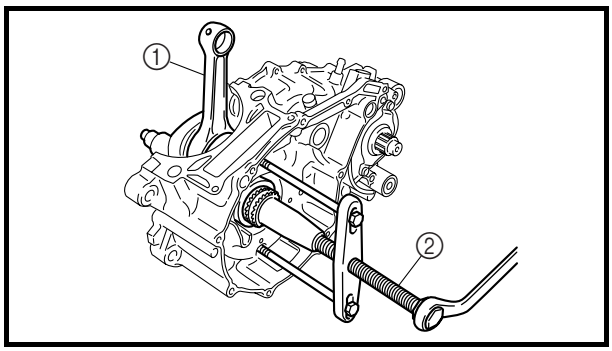

EAS00388
REMOVING THE CRANKSHAFT ASSEMBLY

1. Remove:
   - crankshaft ①

NOTE:
- Remove the crankshaft with the crankcase separating tool ②.
- Make sure the crankcase separating tool is centered over the crankshaft.

	Crankcase separating tool **90890-01135**

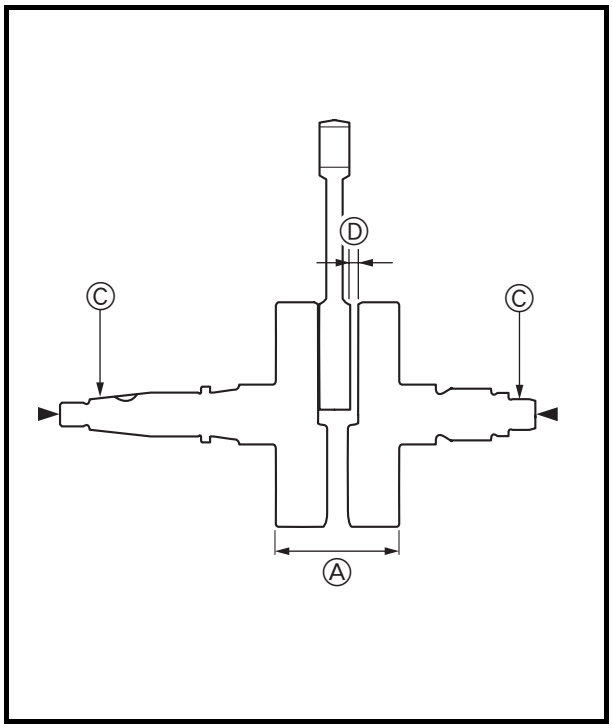

EAS00394
CHECKING THE CRANKSHAFT

1. Measure:
   - big end side clearance Ⓓ
     Out of specification → Replace the big end bearing, crankshaft pin, or connecting rod.

	Big end side clearance **0.350 ~ 0.650 mm** **(0.0138 ~ 0.0256 in)**

2. Measure:
   - crankshaft width Ⓐ
     Out of specification → Replace the crankshaft.

	Crankshaft width **74.95 ~ 75.00 mm** **(2.9508 ~ 2.9528 in)**

3. Measure:
   - crankshaft runout Ⓒ
     Out of specification → Replace the crankshaft, bearing or both.

NOTE:
Turn the crankshaft slowly.

	Maximum crankshaft runout **0.04 mm (0.0016 in)**

http://manuals.magnamaniac.com

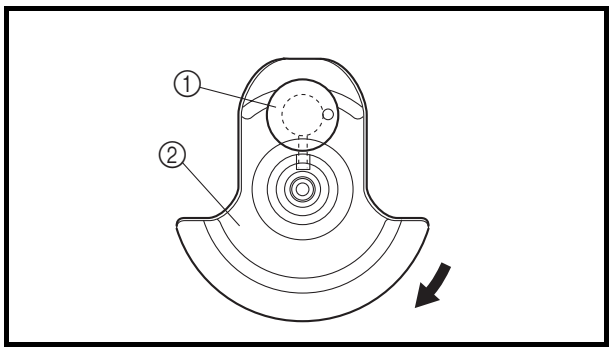

▼▼▼▼▼▼▼▼▼▼▼▼▼▼▼▼▼▼▼▼▼▼▼▼▼▼▼▼▼▼▼▼▼▼

a. The crankshaft ① and the crankshaft pin ② oil passages must be properly interconnected with a tolerance of less than 1 mm (0.04 in).

▲▲▲▲▲▲▲▲▲▲▲▲▲▲▲▲▲▲▲▲▲▲▲▲▲▲▲▲▲▲▲▲▲▲

4. Check:
   - crankshaft sprocket
     Damage/wear → Replace the crankshaft.
   - bearing
     Cracks/damage/wear → Replace the crankshaft.
5. Check:
   - crankshaft journal
     Scratches/wear → Replace the crankshaft.
   - crankshaft journal oil passage
     Obstruction → Blow out with compressed air.

EAS00408

INSTALLING THE CRANKSHAFT

1. Install:
   - crankshaft ①

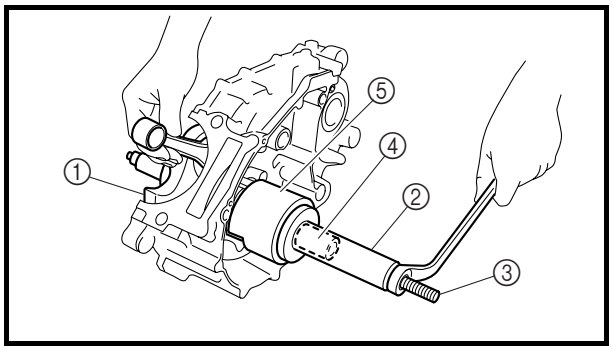

NOTE:

Install the crankshaft with the crankshaft installer pot, crankshaft installer bolt, adapter and spacer (crankshaft installer).

Crankshaft installer pot ②
90890-01274
Crankshaft installer bolt ③
90890-01275
Adapter ④
90890-04130
Spacer (crankshaft installer) ⑤
90890-04144

CAUTION:

To avoid scratching the crankshaft and to ease the installation procedure, lubricate the oil seal lips with lithium-soap-based grease and each bearing with engine oil.

NOTE:

Hold the connecting rod at the top dead center (TDC) on the compression stroke with one hand while turning the nut of the crankshaft installer bolt with the other. Turn the crankshaft installer bolt until the crankshaft bottoms against the bearing.

http://manuals.magnamaniac.com

EAS00419
TRANSMISSION

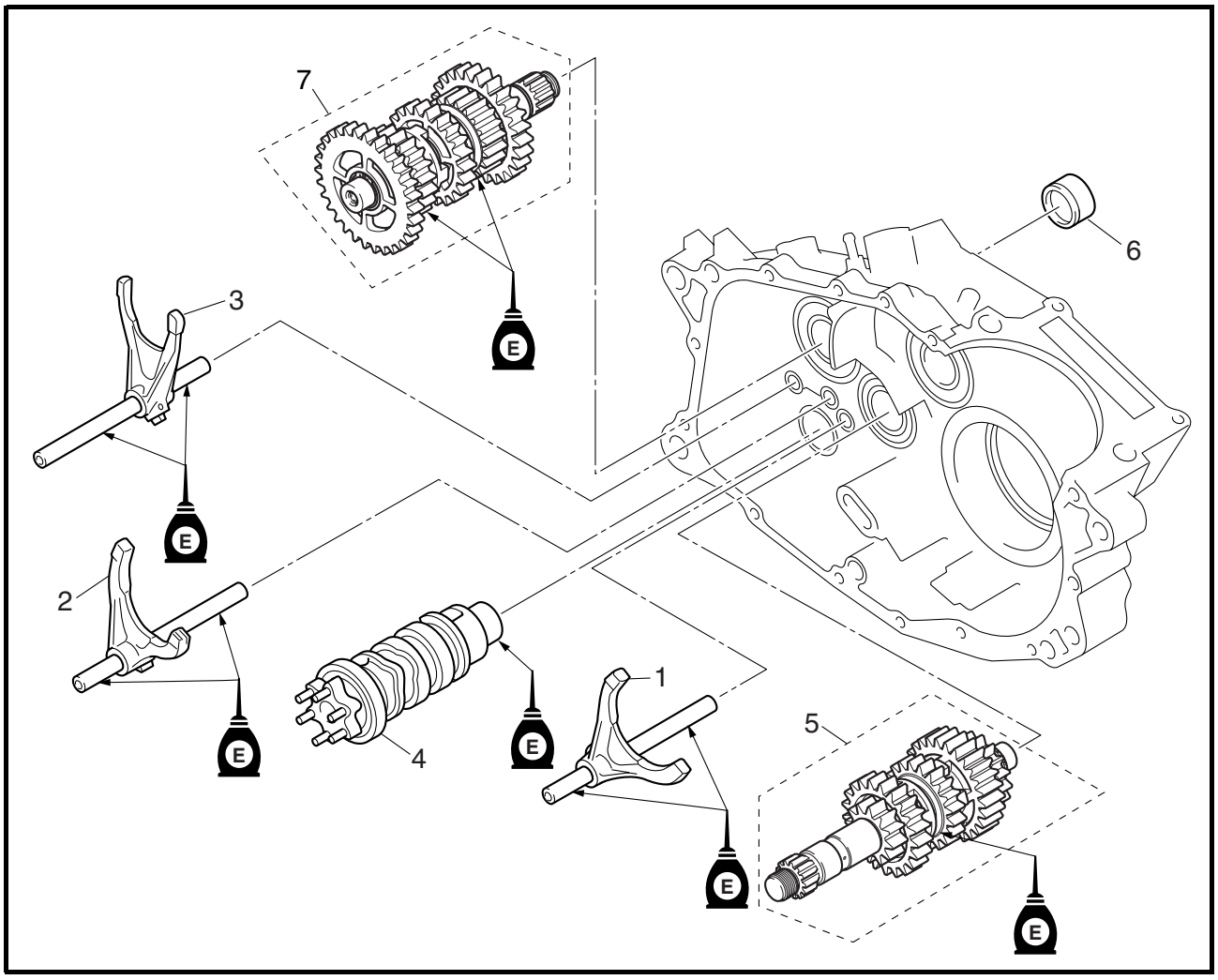

Order	Job/Part	Q'ty	Remarks
	Removing the transmission, shift drum, and shift forks		Remove the parts in the order listed.
	Crankcase		Separate. Refer to "CRANKCASE".
1	Shift fork "C"	1	Refer to "INSTALLING THE TRANSMISSION".
2	Shift fork "R"	1	
3	Shift fork "L"	1	
4	Shift drum	1	
5	Main axle assembly	1	
6	Spacer	1	
7	Drive axle assembly	1	
			For installation, reverse the removal procedure.

http://manuals.magnamaniac.com

MAIN AXLE

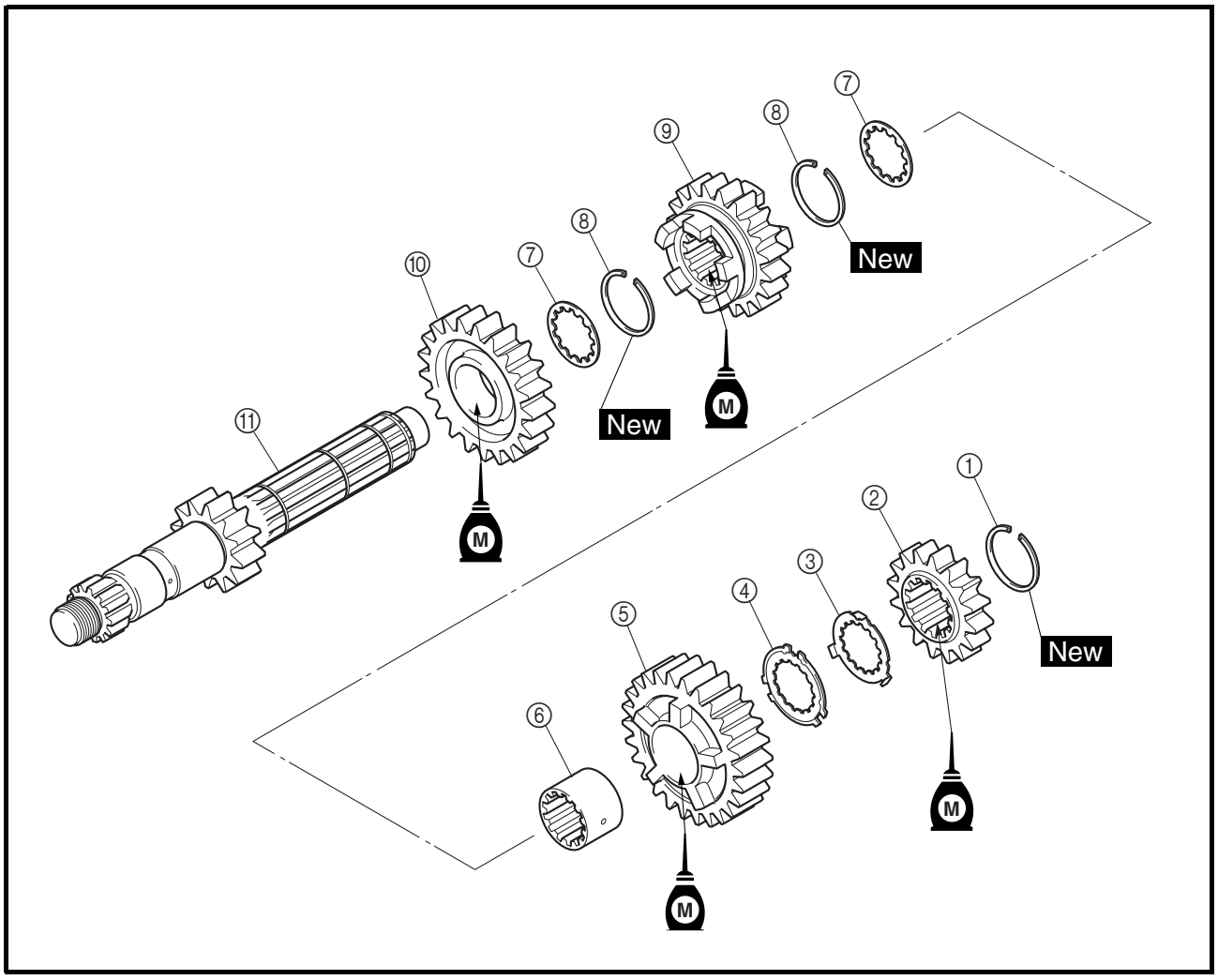

Order	Job/Part	Q'ty	Remarks
	Disassembling the main axle		Remove the parts in the order listed.
①	Circlip	1	
②	2nd pinion gear	1	
③	Toothed lock washer	1	
④	Toothed washer retainer	1	
⑤	5th pinion gear	1	
⑥	Toothed spacer	1	
⑦	Toothed washer	2	Refer to "ASSEMBLING THE MAIN AXLE AND DRIVE AXLE".
⑧	Circlip	2	
⑨	3rd pinion gear	1	
⑩	4th pinion gear	1	
⑪	Main axle/1st pinion gear	1	
			For assembly, reverse the disassembly procedure.

http://manuals.magnamaniac.com

DRIVE AXLE

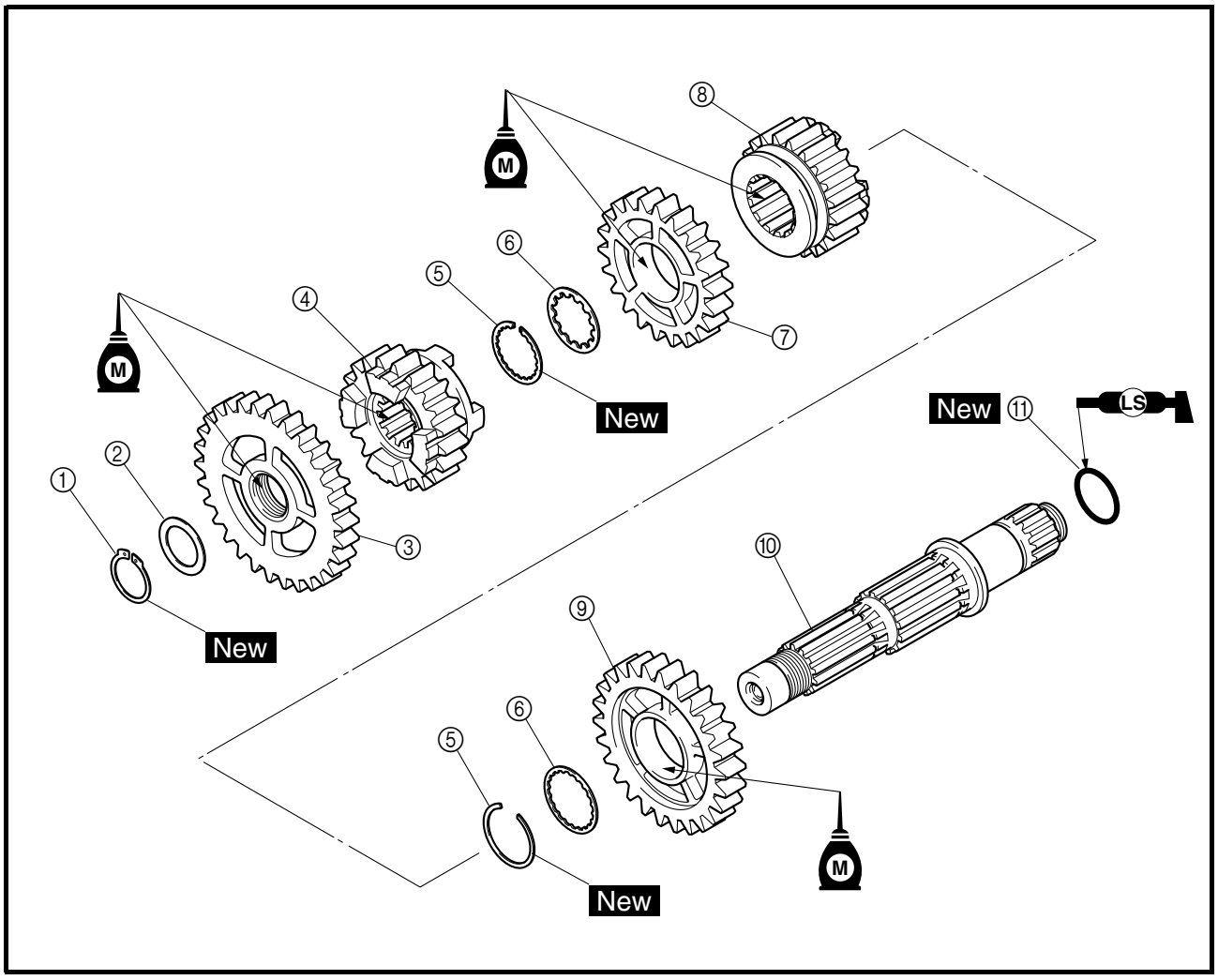

Order	Job/Part	Q'ty	Remarks
	Disassembling the drive axle		Remove the parts in the order listed.
①	Circlip	1	
②	Washer	1	Refer to "ASSEMBLING THE MAIN AXLE AND DRIVE AXLE".
③	1st wheel gear	1	
④	4th wheel gear	1	
⑤	Circlip	2	
⑥	Toothed washer	2	
⑦	3rd wheel gear	1	
⑧	5th wheel gear	1	
⑨	2nd wheel gear	1	
⑩	Drive axle	1	
⑪	O-ring	1	
			For assembly, reverse the disassembly procedure.

http://manuals.magnamaniac.com

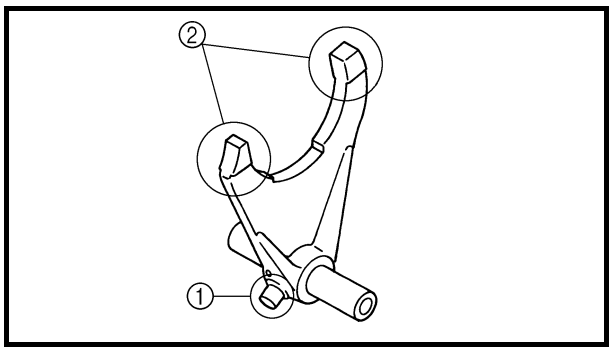

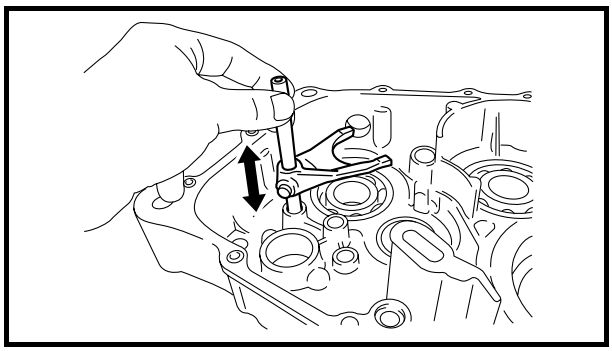

EAS00421
CHECKING THE SHIFT FORKS

The following procedure applies to all of the shift forks.

1. Check:
   - shift fork cam follower ①
   - shift fork pawl ②
     Bends/damage/scoring/wear → Replace the shift fork.
2. Check:
   - shift fork movement
     Rough movement → Replace the shift forks.

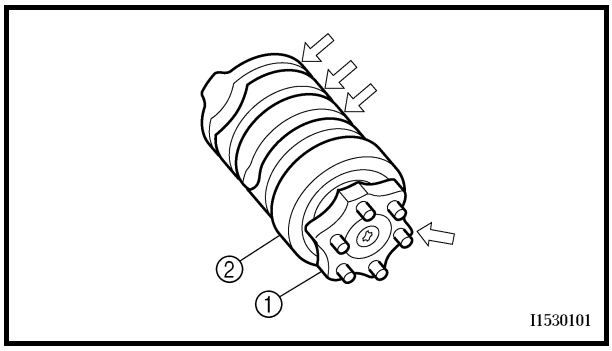

EAS00422
CHECKING THE SHIFT DRUM ASSEMBLY

1. Check:
   - shift drum grooves
     Damage/scratches/wear → Replace the shift drum assembly.
   - shift drum segment ①
     Damage/wear → Replace the shift drum assembly.
   - shift drum bearing ②
     Damage/pitting → Replace the shift drum assembly.

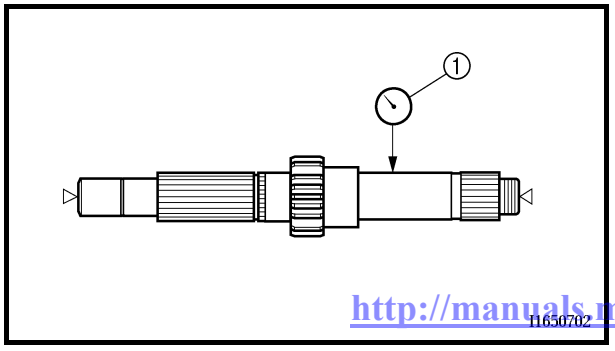

EAS00425
CHECKING THE TRANSMISSION

1. Measure:
   - main axle runout
     (with a centering device and dial gauge ①)
     Out of specification → Replace the main axle.

Main axle runout limit
0.08 mm (0.0031 in)

http://manuals.magnamaniac.com

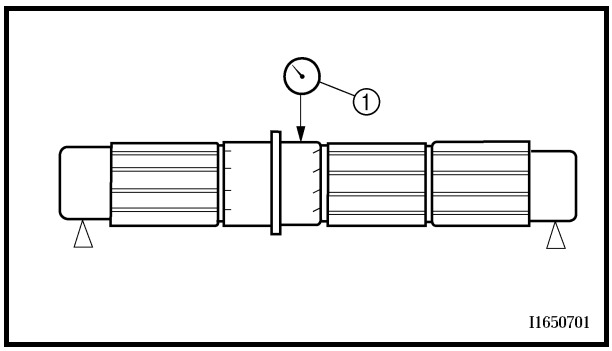

2. Measure:
   • drive axle runout
   (with a centering device and dial gauge ①)
   Out of specification → Replace the drive axle.

Drive axle runout limit
0.08 mm (0.0031 in)

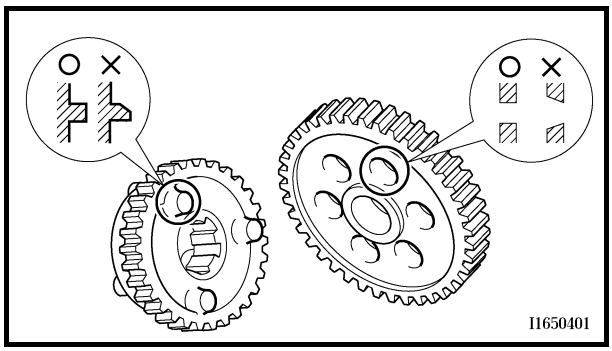

3. Check:
   • transmission gears
   Blue discoloration/pitting/wear → Replace the defective gear(s).
   • transmission gear dogs
   Cracks/damage/rounded edges → Replace the defective gear(s).
4. Check:
   • transmission gear engagement
   (each pinion gear to its respective wheel gear)
   Incorrect → Reassemble the transmission axle assemblies.
5. Check:
   • transmission gear movement
   Rough movement → Replace the defective part(s).
6. Check:
   • circlips
   Bends/damage/looseness → Replace.

ASSEMBLING THE MAIN AXLE AND DRIVE AXLE

1. Install:
   • toothed washer ①
   • circlip ② New

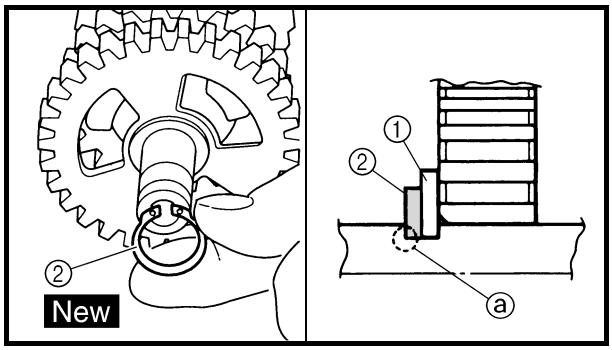

NOTE:
- Be sure the circlip shape-edged corner ⓐ is positioned opposite side to the toothed washer and gear.
- Install the circlip so that both ends ⓑ are positioned in the center of each axle spline ⓒ.

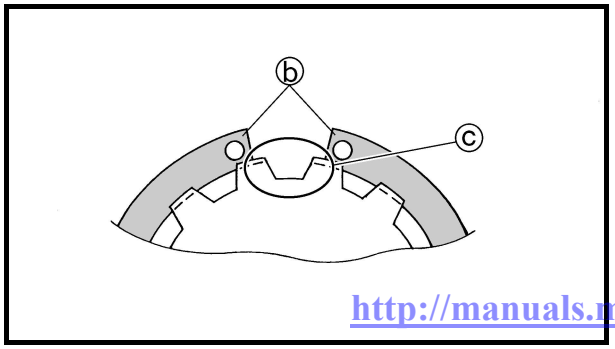

http://manuals.magnamaniac.com

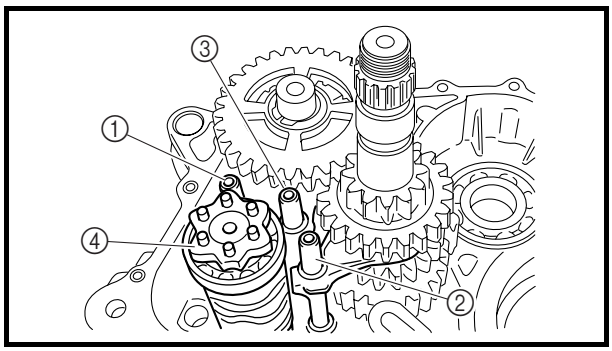

INSTALLING THE TRANSMISSION

1. Install:
   - shift fork "L" ① (to drive axle)
   - shift fork "C" ② (to main axle)
   - shift fork "R" ③ (to drive axle)
   - shift drum ④
   - transmission assembly

NOTE:

- The embossed marks on the shift forks should face towards the right side of the engine and be in the following sequence: "R", "C", and "L".
- Make sure that the shift fork cam follower is properly seated in the shift drum groove.

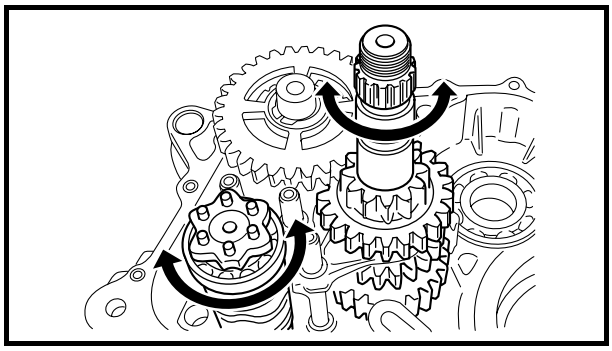

2. Check:
   - shift operation
     Unsmooth operation → Repair.

NOTE:

- Apply engine oil to each gear and bearing thoroughly.
- Before assembling the crankcase, make sure that the transmission is in neutral and that the gears turn freely.

http://manuals.magnamaniac.com

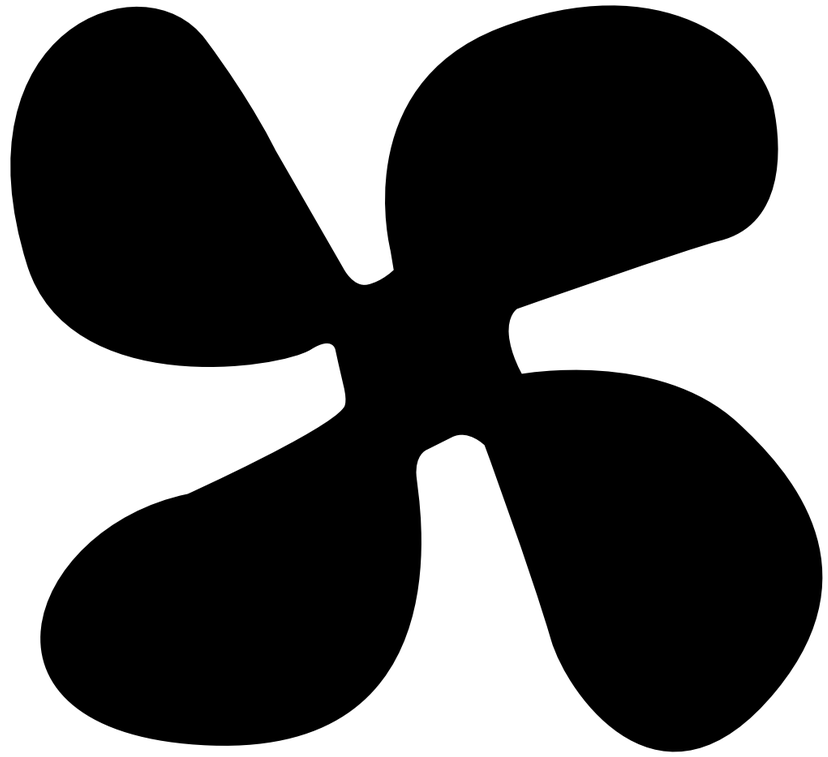

COOL 6

http://manuals.magnamaniac.com

CHAPTER 6
COOLING SYSTEM

RADIATOR 6-1
CHECKING THE RADIATOR 6-3
INSTALLING THE RADIATOR 6-4

THERMOSTAT 6-5
CHECKING THE THERMOSTAT 6-6
INSTALLING THE THERMOSTAT 6-6

WATER PUMP 6-8
DISASSEMBLING THE WATER PUMP 6-11
CHECKING THE WATER PUMP 6-11
ASSEMBLING THE WATER PUMP 6-12
INSTALLING THE WATER PUMP 6-14

http://manuals.magnamaniac.com

http://manuals.magnamaniac.com

EAS00454

COOLING SYSTEM

RADIATOR

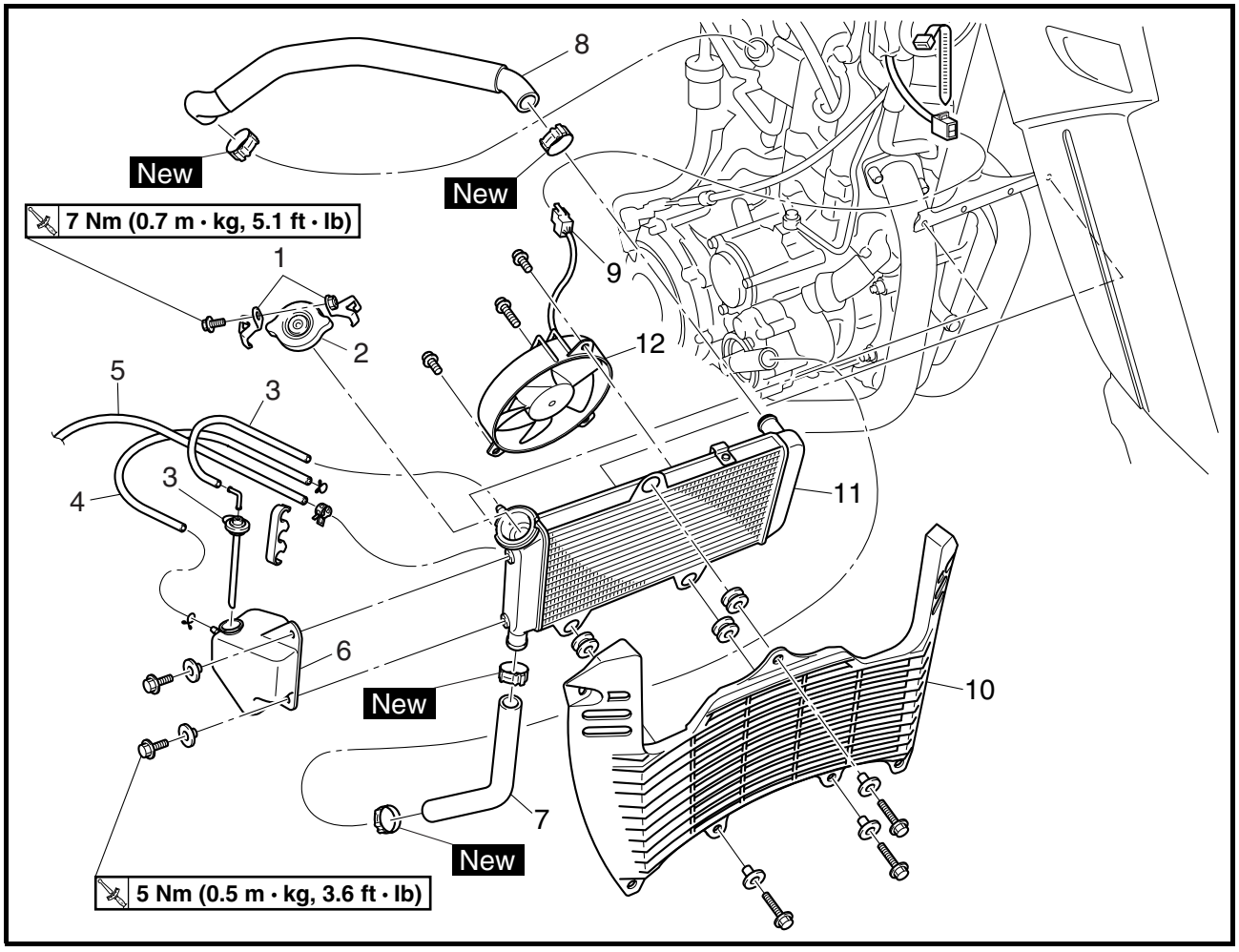

Order	Job/Part	Q'ty	Remarks
	Removing the radiator		Remove the parts in the order listed.
	Seat/side panels (left and right)		Refer to "COWLING AND COVER" in chapter 3.
	Fuel tank side covers (left and right)/ fuel tank		Refer to "FUEL TANK" in chapter 3.
	Coolant		Drain. Refer to "CHANGING THE COOLANT" in chapter 3.
1	Radiator cap retainer	2	
2	Radiator cap	1	
3	Coolant reservoir hose/cap	1/1	
4	Coolant reservoir breather hose	1	
5	Fast idle plunger outlet hose	1	Disconnect.
6	Coolant reservoir	1	

http://manuals.magnamaniac.com

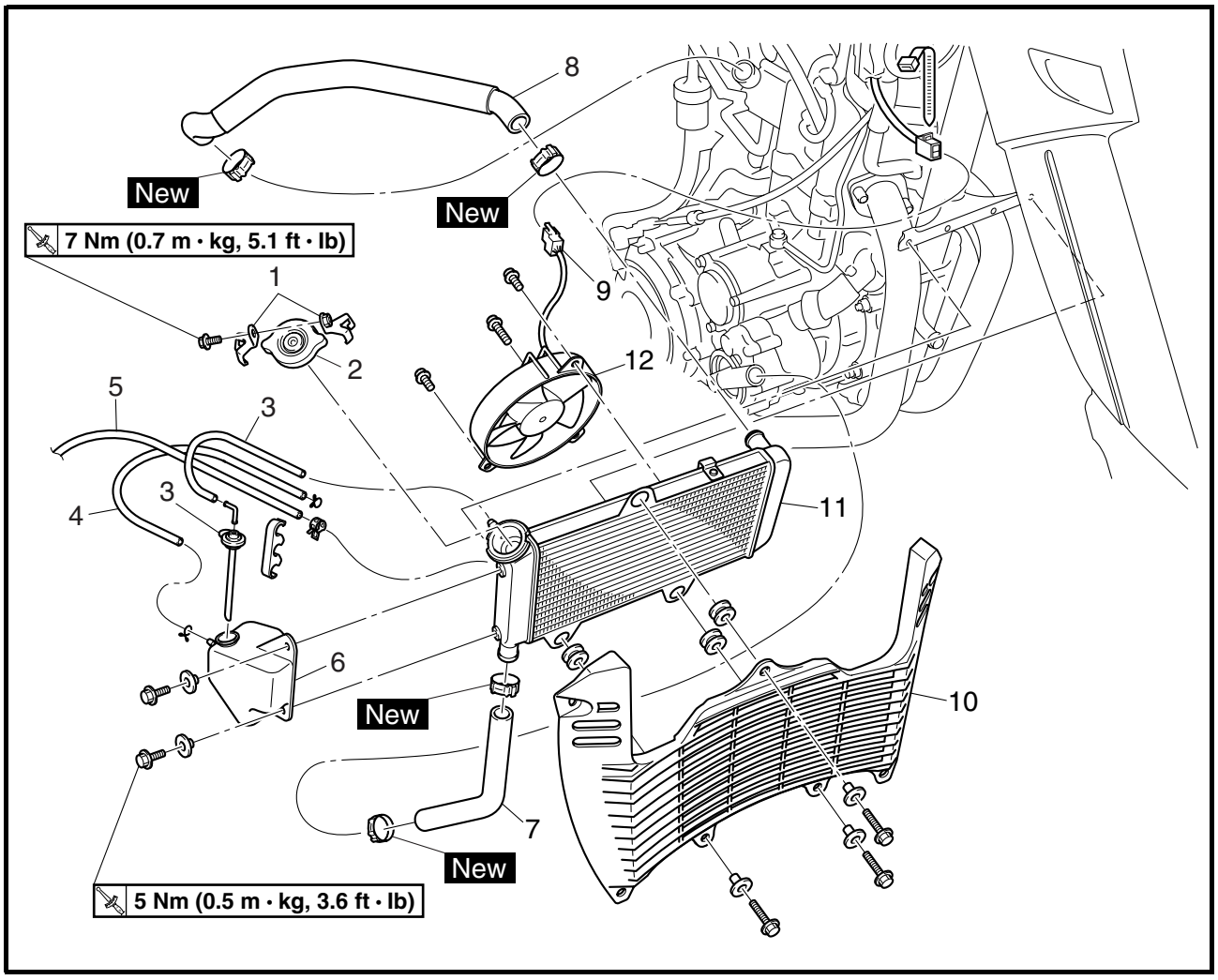

Order	Job/Part	Q'ty	Remarks
7	Radiator outlet hose	1	Refer to "INSTALLING THE RADIATOR".
8	Radiator inlet hose	1	
9	Radiator fan motor coupler	1	Disconnect.
10	Radiator guard	1	
11	Radiator	1	
12	Radiator fan	1	
			For installation, reverse the removal procedure.

http://manuals.magnamaniac.com

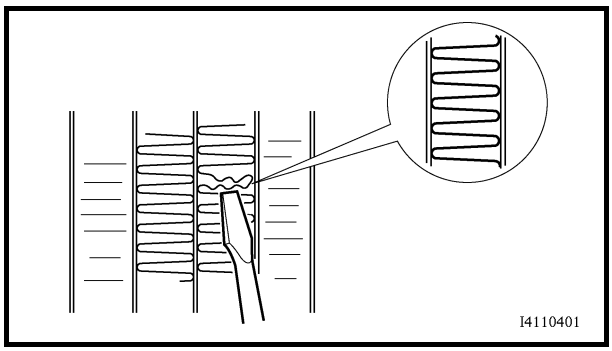

EAS00455
CHECKING THE RADIATOR

1. Check:
   - radiator fins
     Obstruction → Clean.
     Apply compressed air to the rear of the radiator.
     Damage → Repair or replace.

NOTE:
Straighten any flattened fins with a thin, flat-head screwdriver.

2. Check:
   - radiator hoses
     Cracks/damage → Replace.

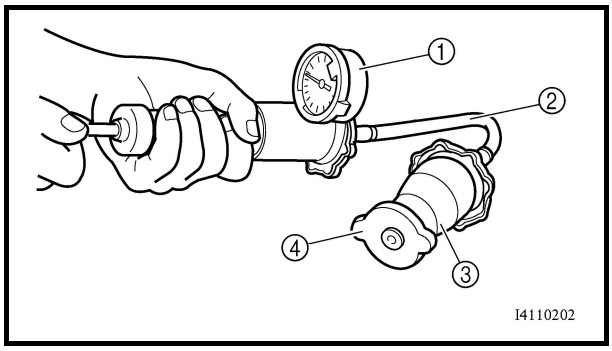

3. Measure:
   - radiator cap opening pressure
     Below the specified pressure → Replace the radiator cap.

Radiator cap opening pressure
110.0 ~ 140.0 kPa
(1.10 ~ 1.40 kg/cm², 16.0 ~ 20.3 psi)

▼▼▼▼▼▼▼▼▼▼▼▼▼▼▼▼▼▼▼▼▼▼▼▼▼▼▼▼▼▼▼▼

a. Install the radiator cap tester ① and radiator cap tester adaptor ② and radiator cap tester adaptor ③ to the radiator cap ④.

Radiator cap tester
90890-01325
Radiator cap tester adaptor
90890-01352
Radiator cap tester adaptor
90890-01497

b. Apply the specified pressure for ten seconds and make sure there is no drop in pressure.

▲▲▲▲▲▲▲▲▲▲▲▲▲▲▲▲▲▲▲▲▲▲▲▲▲▲▲▲▲▲▲▲

4. Check:
   - radiator fan
     Damage → Replace.
     Malfunction → Check and repair.
     Refer to "COOLING SYSTEM" in chapter 8.

http://manuals.magnamaxx.com

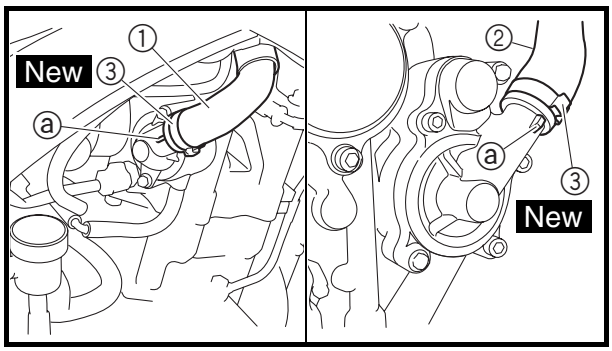

EAS00456
INSTALLING THE RADIATOR

1. Install:
   - radiator inlet hose ①
   - radiator outlet hose ②
   - hose clamps ③ New

NOTE:
Install the radiator inlet hose and radiator outlet hose so that each hose contacts the respective projection ⓐ.

2. Fill:
   - cooling system
     (with the specified amount of the recommended coolant)
     Refer to "CHANGING THE COOLANT" in chapter 3.

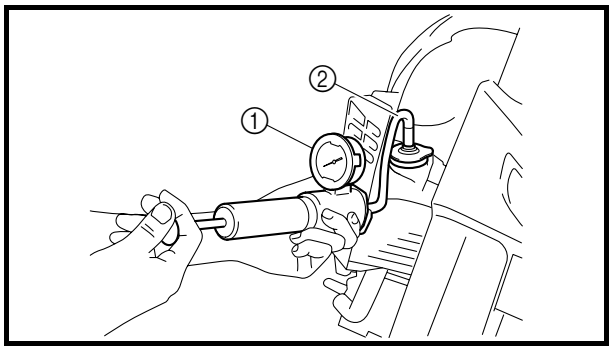

3. Check:
   - cooling system
     Leaks → Repair or replace any faulty part.

▼▼▼▼▼▼▼▼▼▼▼▼▼▼▼▼▼▼▼▼▼▼▼▼▼▼▼▼▼▼▼▼▼▼

a. Attach the radiator cap tester ① and radiator tester adapter ② to the radiator.

Radiator cap tester
90890-01325
Radiator tester adapter
90890-01496

b. Apply 100 kPa (1.0 kg/cm, 14.2233 psi) of pressure and make sure there is no drop in pressure.

▲▲▲▲▲▲▲▲▲▲▲▲▲▲▲▲▲▲▲▲▲▲▲▲▲▲▲▲▲▲▲▲▲▲

4. Measure:
   - radiator cap opening pressure
     Bellow the specified pressure → Replace the radiator cap.
     Refer to "CHECKING THE RADIATOR".

http://manuals.magnamaniac.com

EAS00460
THERMOSTAT

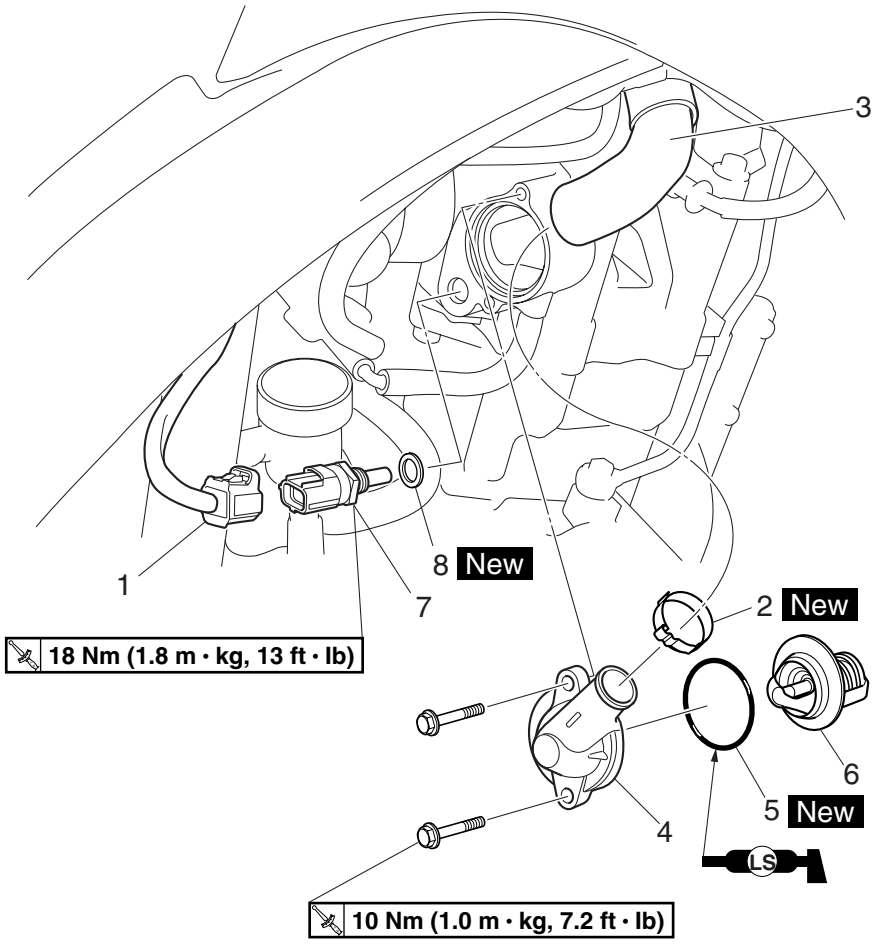

Order	Job/Part	Q'ty	Remarks
	Removing the thermostat		Remove the parts in the order listed.
	Coolant		Drain. Refer to "CHANGING THE COOLANT" in chapter 3.
1	Coolant temperature sensor coupler	1	Disconnect.
2	Hose clamp	1	Refer to "INSTALLING THE THERMOSTAT".
3	Radiator inlet hose	1	
4	Thermostat cover	1	
5	O-ring	1	
6	Thermostat	1	
7	Coolant temperature sensor	1	
8	Copper washer	1	
			For installation, reverse the removal procedure.

http://manuals.magnamaniac.com

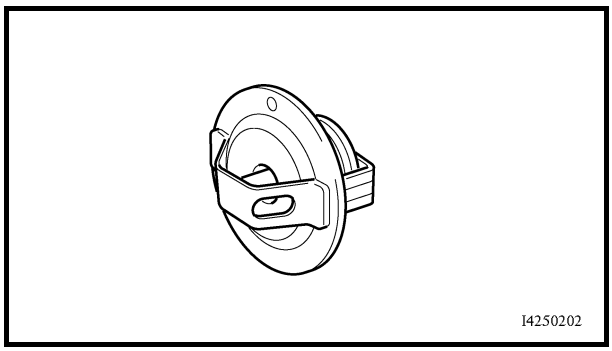

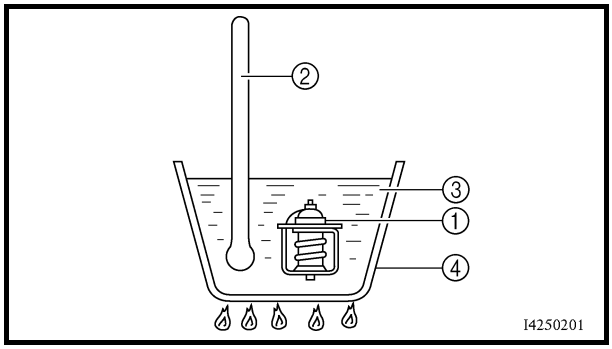

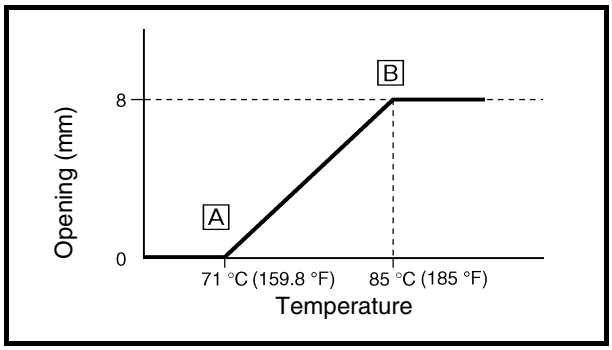

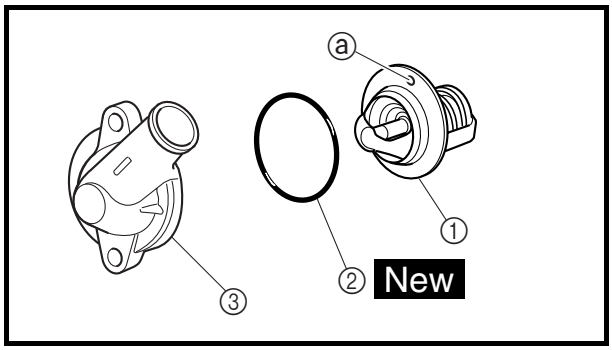

EAS00462
CHECKING THE THERMOSTAT

1. Check:
   - thermostat ①
     Does not open at 71 ~ 85 °C (159.8 ~ 185 °F) → Replace.

▼▼▼▼▼▼▼▼▼▼▼▼▼▼▼▼▼▼▼▼▼▼▼▼▼▼▼▼▼▼▼▼▼▼

a. Suspend the thermostat in a container filled with water.
b. Slowly heat the water.
c. Place a thermometer in the water.
d. While stirring the water, observe the thermostat and thermometer's indicated temperature.

▲▲▲▲▲▲▲▲▲▲▲▲▲▲▲▲▲▲▲▲▲▲▲▲▲▲▲▲▲▲▲▲▲▲

① Thermostat
② Thermometer
③ Water
④ Container
A Fully closed
B Fully open

NOTE:

If the accuracy of the thermostat is in doubt, replace it. A faulty thermostat could cause serious overheating or overcooling.

2. Check:
   - thermostat cover
   - thermostat housing (cylinder head)
     Cracks/damage → Replace.

EAS00466
INSTALLING THE THERMOSTAT

1. Install:
   - thermostat ①
   - O-ring ② New
   - thermostat cover ③

10 Nm (1.0 m · kg, 7.2 ft · lb)

NOTE:

- Install the thermostat with its breather hole ⓐ facing up.
- Lubricate the O-ring with a thin coat of lithium-soap-based grease.

http://manuals.magnamaniac.com

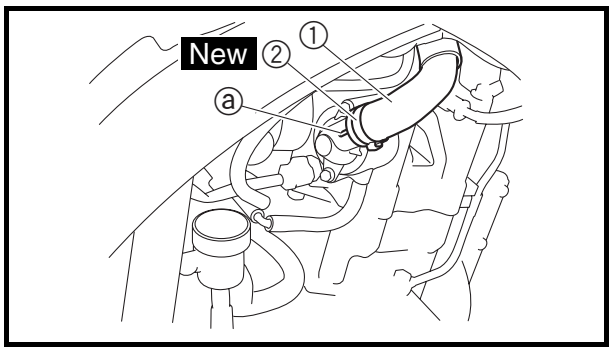

2. Install:
   - radiator inlet hose ①
   - hose clamp ② New

NOTE:
Install the radiator inlet hose ① so that it contacts the projection on the thermostat cover ⓐ.

3. Install:
   - copper washer New
   - coolant temperature sensor

18 Nm (1.8 m · kg, 13 ft · lb)

CAUTION:
Use extreme care when handling the coolant temperature sensor. Replace the sensor if it is dropped or subjected to a strong impact.

4. Fill:
   - cooling system
     (with the specified amount of the recommended coolant)
     Refer to "CHANGING THE COOLANT" in chapter 3.
5. Check:
   - cooling system
     Leaks → Repair or replace any faulty part.
6. Measure:
   - radiator cap opening pressure
     Below the specified pressure → Replace the radiator cap.
     Refer to "CHECKING THE RADIATOR".

http://manuals.magnamaniac.com

EAS00468
WATER PUMP

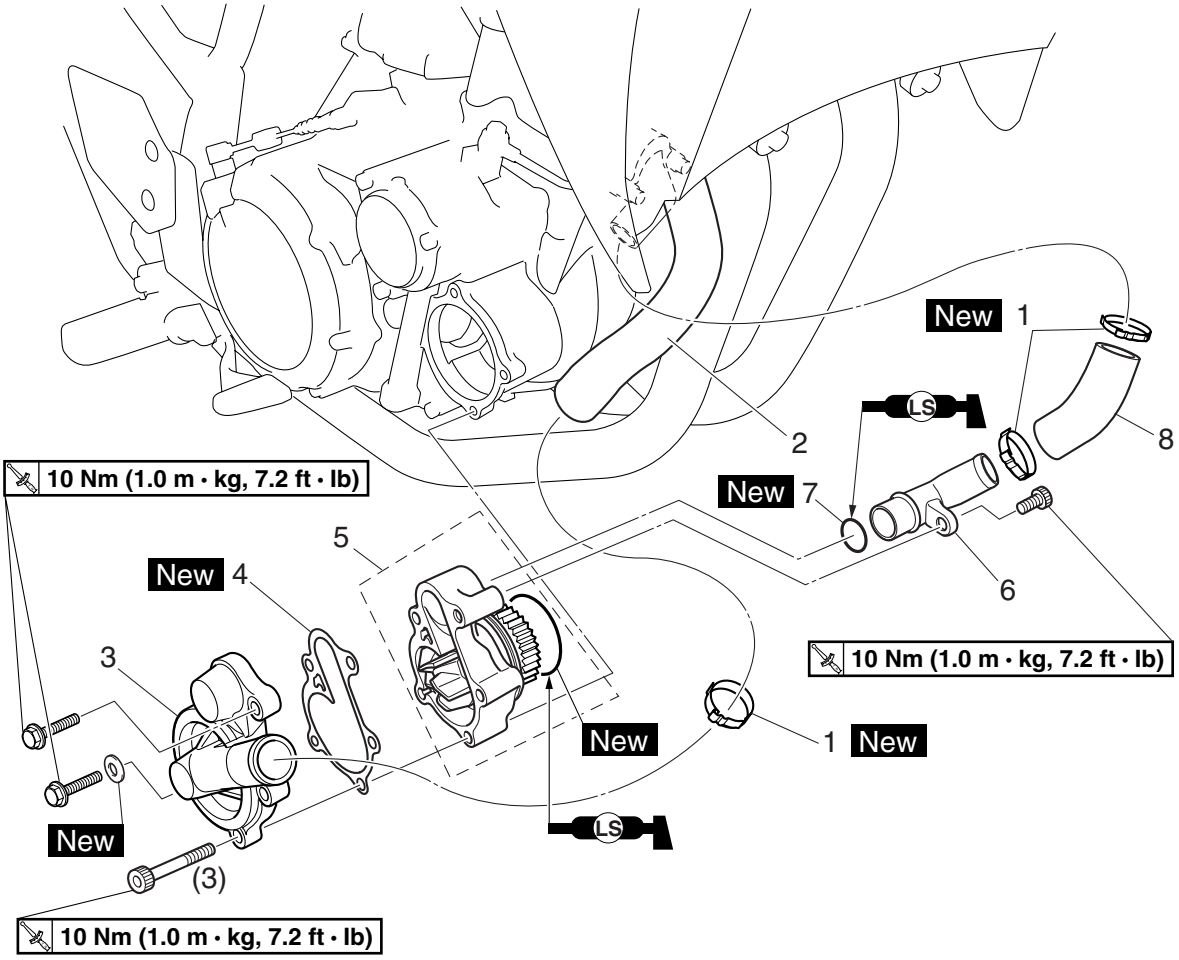

Order	Job/Part	Q'ty	Remarks
	Removing the water pump		Remove the parts in the order listed. **NOTE:** It is not necessary to remove the water pump unless the coolant level is extremely low or the coolant contains engine oil.
	Coolant		Drain. Refer to "CHANGING THE COOLANT" in chapter 3.
1	Hose clamp	3	Disconnect. Refer to "INSTALLING THE WATER PUMP".
2	Radiator outlet hose	1	
3	Water pump cover	1	
4	Gasket	1	

http://manuals.magnamaniac.com

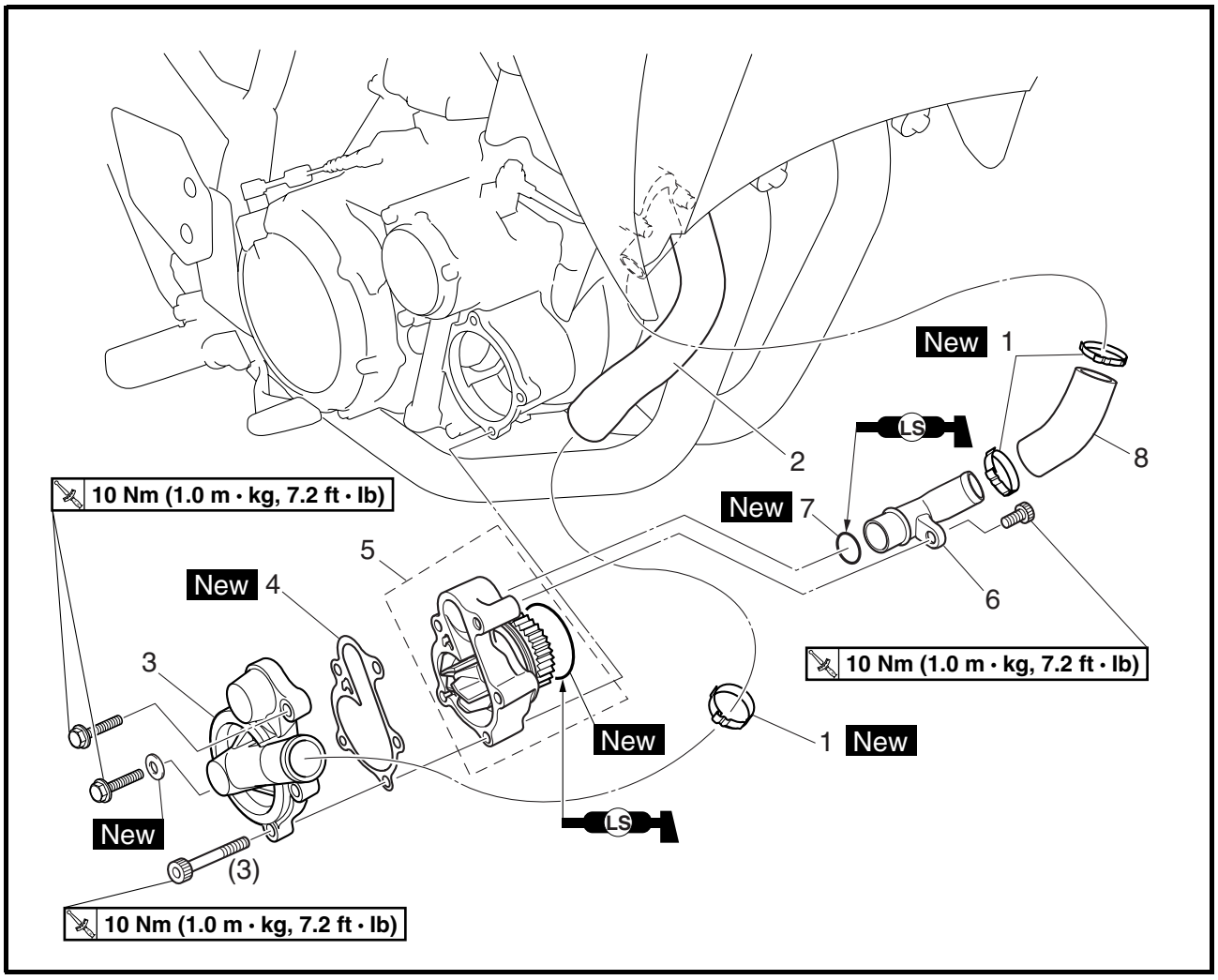

Order	Job/Part	Q'ty	Remarks
5	Water pump assembly	1	
6	Water pump outlet pipe	1	Refer to "INSTALLING THE WATER PUMP".
7	O-ring	1	
8	Water pump outlet hose	1	
			For installation, reverse the removal procedure.

http://manuals.magnamaniac.com

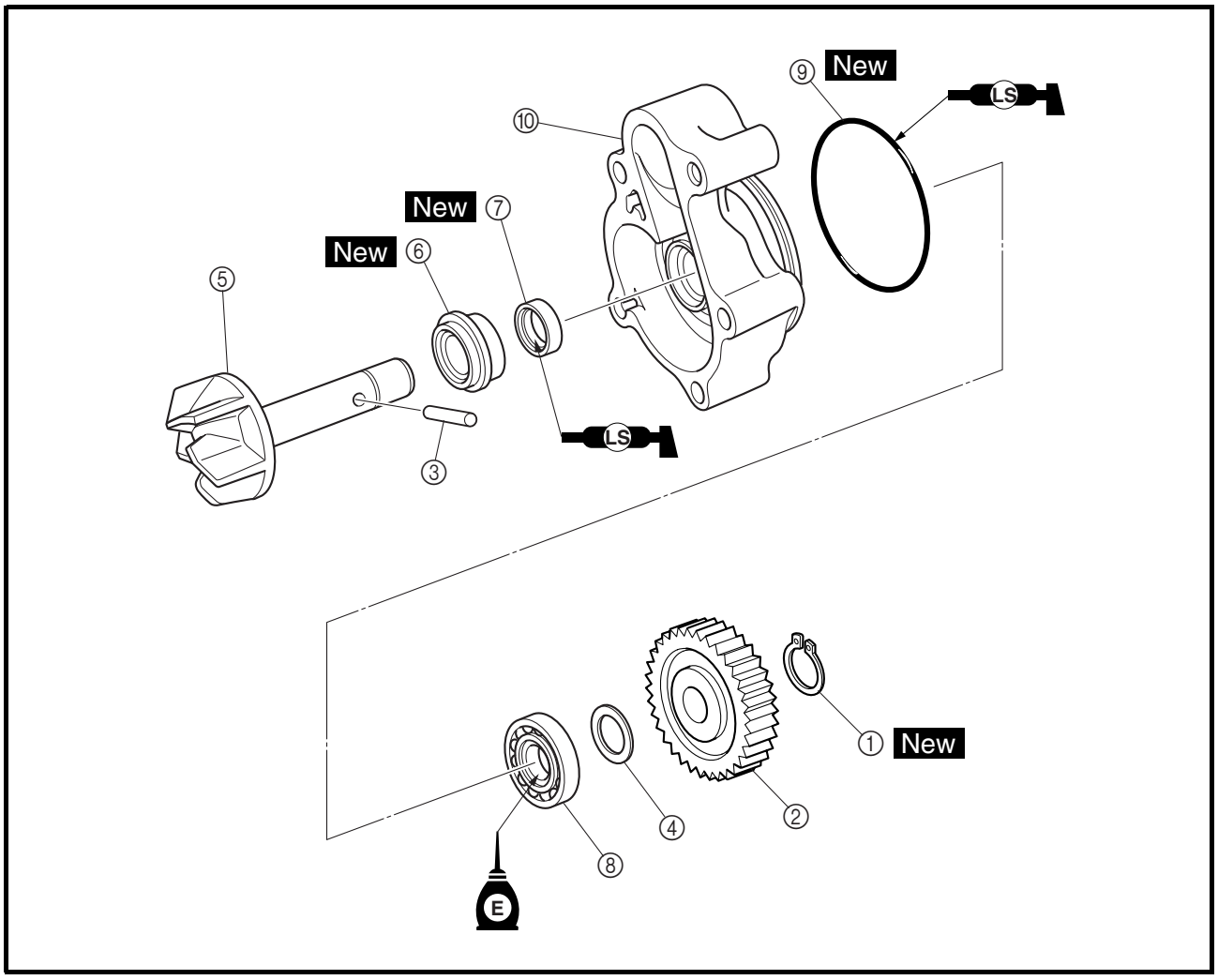

Order	Job/Part	Q'ty	Remarks
	Disassembling the water pump		Remove the parts in the order listed.
①	Circlip	1	
②	Impeller shaft gear	1	Refer to "ASSEMBLING THE WATER PUMP".
③	Pin	1	
④	Washer	1	
⑤	Impeller shaft assembly	1	
⑥	Water pump seal	1	Refer to "DISASSEMBLING THE WATER PUMP" and "ASSEMBLING THE WATER PUMP".
⑦	Oil seal	1	
⑧	Bearing	1	
⑨	O-ring	1	
⑩	Water pump housing	1	
			For assembly, reverse the disassembly procedure.

http://manuals.magnamaniac.com

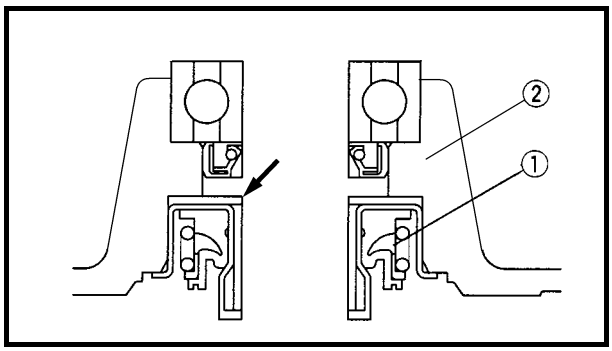

EAS00470
DISASSEMBLING THE WATER PUMP

1. Remove:
   • water pump seal ①

NOTE:
Tap out the water pump seal from water pump housing in the direction of the arrow shown.

② Water pump housing

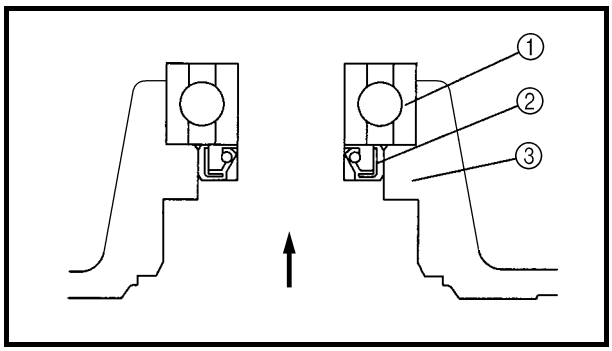

2. Remove:
   • bearing ①
   • oil seal ②

NOTE:
Tap out the bearing and oil seal from water pump housing in the direction of the arrow shown.

③ Water pump housing

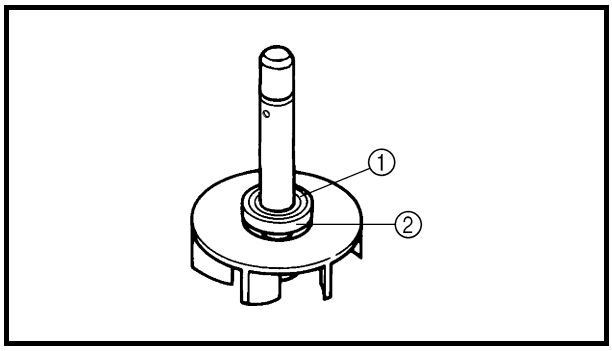

3. Remove:
   • rubber damper holder ①
   • rubber damper ②
     (from the impeller, with a thin, flat-head screwdriver)

NOTE:
Do not scratch the impeller shaft.

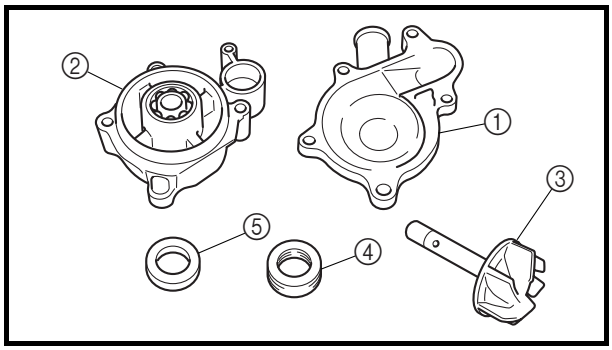

EAS00474
CHECKING THE WATER PUMP

1. Check:
   • water pump housing cover ①
   • water pump housing ②
   • impeller ③
   • rubber damper ④
   • rubber damper holder ⑤
     Cracks/damage/wear → Replace.
2. Check:
   • water pump seal
   • oil seal
     Cracks/damage/wear → Replace.
3. Check:
   • bearing
     Rough movement → Replace.
4. Check:
   • impeller shaft gear
     Pitting/wear → Replace.

http://manuals.magnamaniac.com

5. Check:
   - water pump outlet pipe
   - radiator outlet hose
   - water jacket inlet housing
   Cracks/damage/wear → Replace.

EAS00475
ASSEMBLING THE WATER PUMP

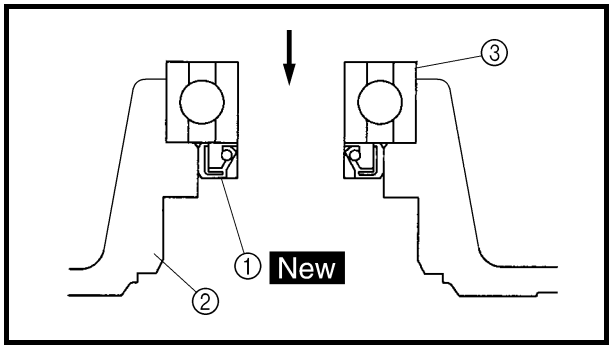

1. Install:
   - oil seal ① New
     (into the water pump housing ②)
   - bearing ③

NOTE:
- Before installing the oil seal, apply tap water or coolant onto its outer surface.
- Install the oil seal with a socket that matches its outside diameter.

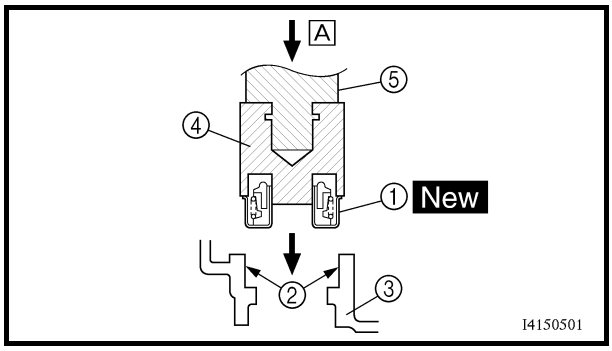

2. Install:
   - water pump seal ① New

CAUTION:
Never lubricate the water pump seal surface with oil or grease.

NOTE:
- Install the water pump seal with the special tools.
- Before installing the water pump, apply Yamaha bond No.1215 ② to the water pump housing ③.

Mechanical seal installer ④
90890-04132
Middle driven shaft bearing driver ⑤
90890-04058
Yamaha bond No.1215
90890-85505

A Push down.

http://manuals.magnamaniac.com

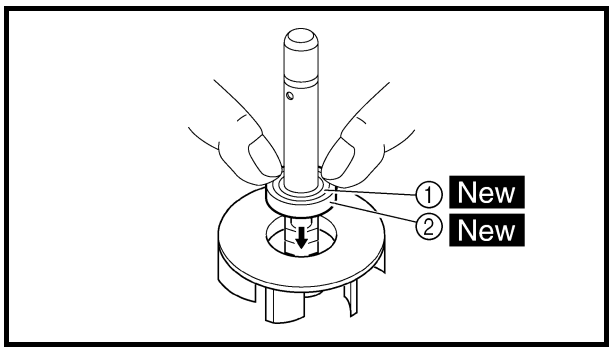

3. Install:
   - rubber damper ① New
   - rubber damper holder ② New

NOTE:
Before installing the rubber damper, apply tap water or coolant onto its outer surface.

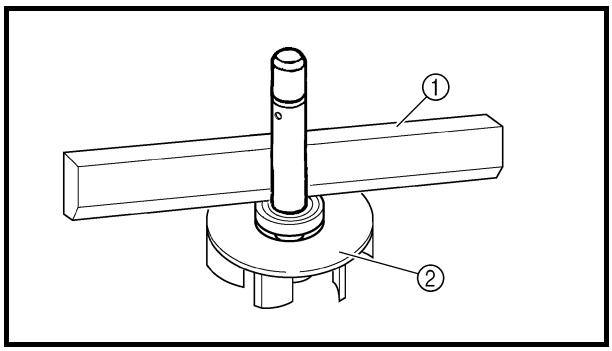

4. Measure:
   - impeller shaft tilt
     Out of specification → Repeat steps (3) and (4).

CAUTION:
Make sure the rubber damper and rubber damper holder are flush with the impeller.

Impeller shaft tilt limit
0.15 mm (0.006 in)

① Straightedge
② Impeller

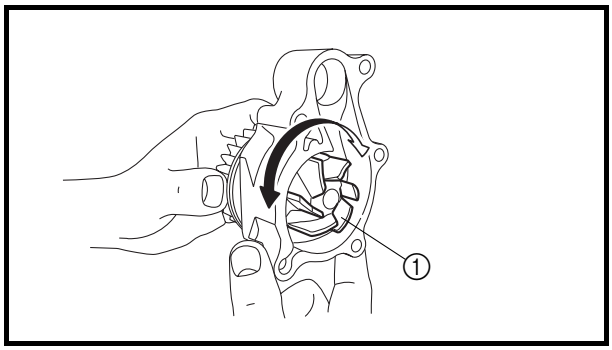

5. Install:
   - impeller shaft assembly ①
   - washer
   - pin
   - impeller shaft gear
   - circlip New

NOTE:
After installation, check that the impeller shaft rotates smoothly.

http://manuals.magnamaniac.com

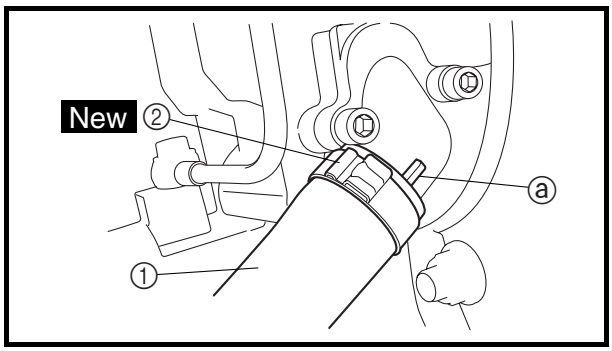

EAS00478
INSTALLING THE WATER PUMP

1. Install:
   - water pump outlet hose ①
   - O-rings New
   - water pump outlet pipe (to the water pump assembly)
     10 Nm (1.0 m · kg, 7.2 ft · lb)
   - hose clamps ② New

⚠ WARNING

Always use new O-rings.

NOTE:

- Install the water pump outlet hose so that it contacts the projection ⓐ on the water jacket joint.
- Before installing the water pump outlet pipe, lubricate the O-rings with a thin coat of lithium-soap-based grease.

2. Install:
   - gasket New
   - water pump cover
     10 Nm (1.0 m · kg, 7.2 ft · lb)
   - water pump assembly
     10 Nm (1.0 m · kg, 7.2 ft · lb)
3. Install:
   - radiator outlet hose ①
   - hose clamp ② New

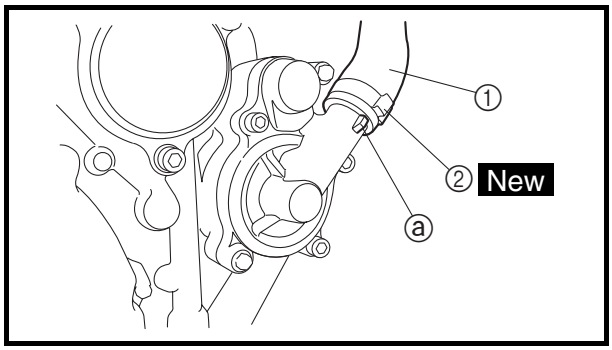

NOTE:

Install the radiator outlet hose ① so that it contacts the projection ⓐ on the water pump cover.

4. Fill:
   - cooling system (with the specified amount of the recommended coolant)
     Refer to “CHANGING THE COOLANT” in chapter 3.
5. Check:
   - cooling system
     Leaks → Repair or replace the faulty part.
6. Measure:
   - radiator cap opening pressure
     Below the specified pressure → Replace the radiator cap.
     Refer to “CHECKING THE RADIATOR”.

http://manuals.magnamaniac.com

FI

7

http://manuals.magnamaniac.com

CHAPTER 7
FUEL INJECTION SYSTEM

FUEL INJECTION SYSTEM 7-1
WIRING DIAGRAM 7-2
ECU SELF-DIAGNOSTIC FUNCTION 7-3
ALTERNATE OPERATION CONTROL (FAIL-SAFE ACTION) 7-4
FAIL-SAFE ACTION TABLE 7-4
TROUBLESHOOTING CHART 7-6
DIAGNOSTIC MODE 7-7
TROUBLESHOOTING DETAILS 7-12

THROTTLE BODY ASSEMBLY 7-23
CHECKING THE FUEL INJECTOR 7-26
CHECKING THE THROTTLE BODY 7-26
INSTALLING THE THROTTLE BODY ASSEMBLY 7-27
CHECKING THE FUEL PUMP 7-28
CHECKING AND ADJUSTING THE THROTTLE POSITION SENSOR 7-29

AIR INDUCTION SYSTEM 7-32
AIR INJECTION 7-32
AIR CUT-OFF VALVE 7-32
AIR INDUCTION SYSTEM DIAGRAMS 7-33
AIR CUT-OFF VALVE ASSEMBLY 7-34
CHECKING THE AIR INDUCTION SYSTEM 7-36

http://manuals.magnamaniac.com

http://manuals.magnamaniac.com

EAS00894

FUEL INJECTION SYSTEM

EAS00895

FUEL INJECTION SYSTEM

① Air cut-off valve
② Air induction system solenoid
③ Engine trouble warning light
④ Fuel tank
⑤ Fuel pump (include fuel pressure regulator)
⑥ Fuel hose
⑦ Fuel injector
⑧ Throttle position sensor
⑨ Intake air temperature sensor
⑩ Air filter case
⑪ Fuel injection system relay
⑫ Battery
⑬ Catalytic converter
⑭ ECU
⑮ Lean angle cut-off switch
⑯ Fast idle plunger
⑰ Crankshaft position sensor
⑱ Coolant temperature sensor
⑲ Spark plug
⑳ Intake air pressure sensor
㉑ Ignition coil

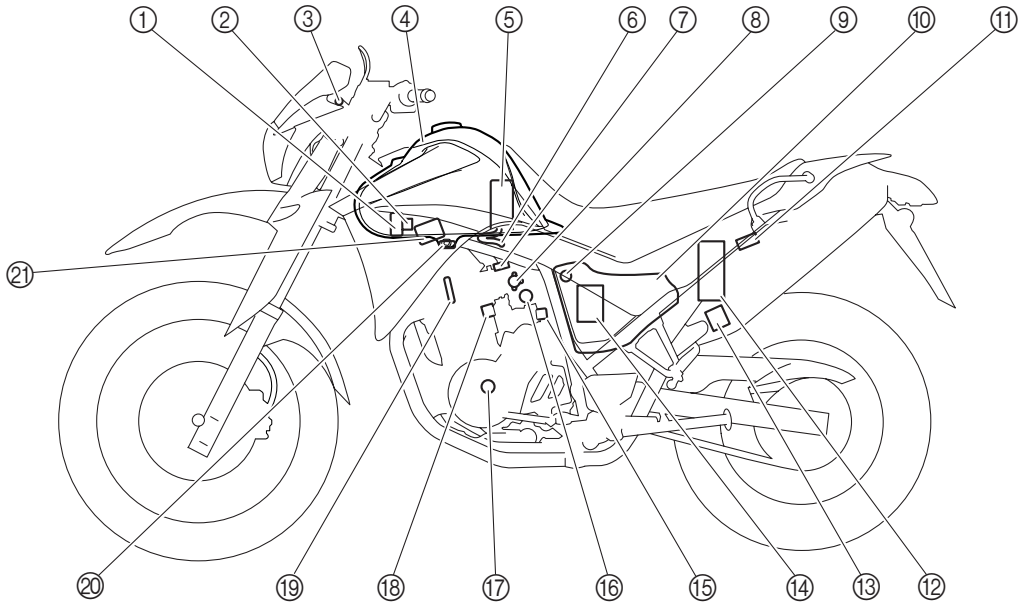

http://manuals.magnamaniac.com

EAS00898
WIRING DIAGRAM

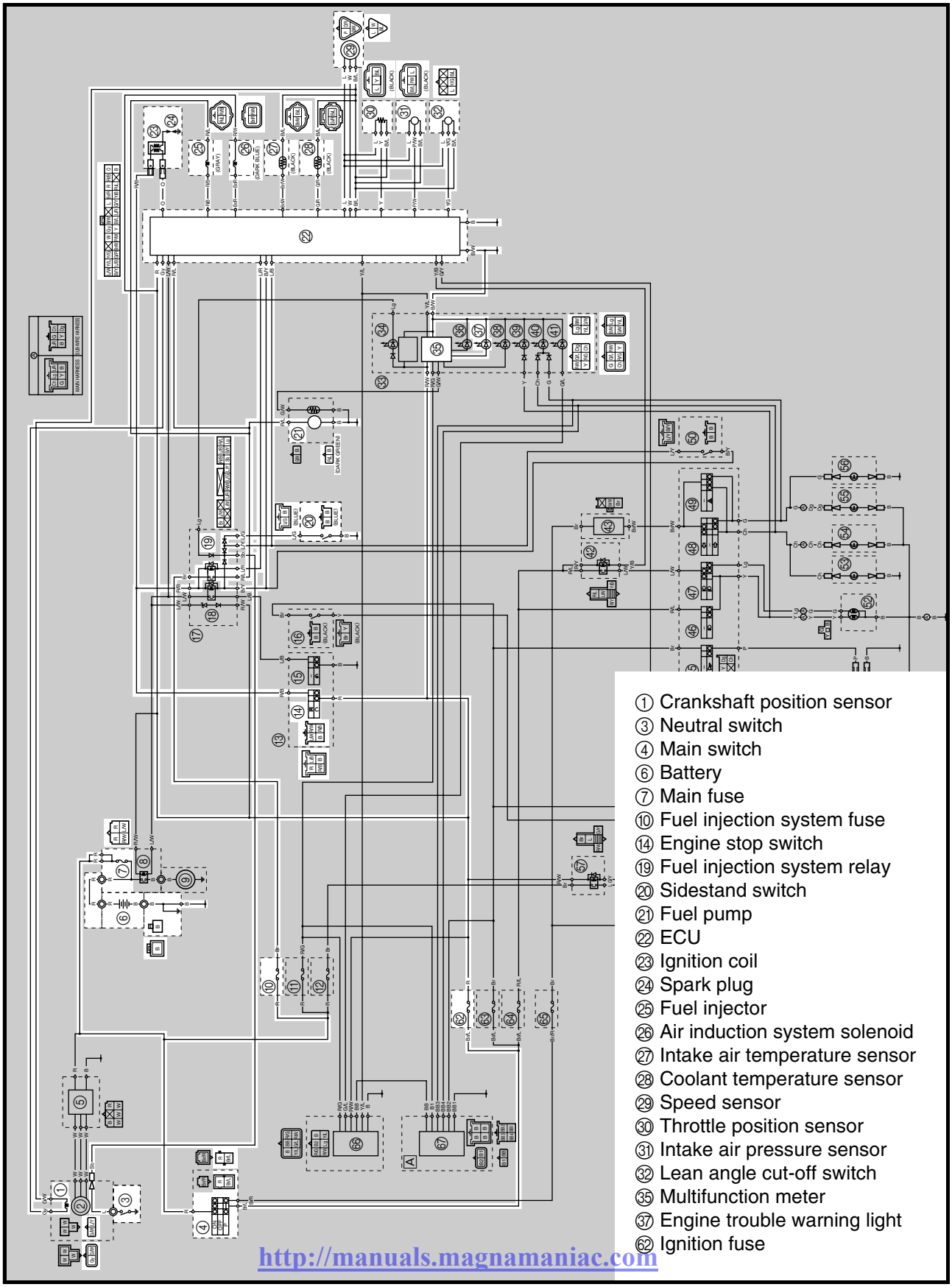

① Crankshaft position sensor
③ Neutral switch
④ Main switch
⑥ Battery
⑦ Main fuse
⑩ Fuel injection system fuse
⑭ Engine stop switch
⑲ Fuel injection system relay
⑳ Sidestand switch
㉑ Fuel pump
㉒ ECU
㉓ Ignition coil
㉔ Spark plug
㉕ Fuel injector
㉖ Air induction system solenoid
㉗ Intake air temperature sensor
㉘ Coolant temperature sensor
㉙ Speed sensor
㉚ Throttle position sensor
㉛ Intake air pressure sensor
㉜ Lean angle cut-off switch
㉟ Multifunction meter
㊲ Engine trouble warning light
㊷ Ignition fuse

http://manuals.magnamaniac.com

EAS00899
ECU SELF-DIAGNOSTIC FUNCTION

The ECU is equipped with a self-diagnostic function to ensure the normal operation of the fuel injection system. If a malfunction is detected in the fuel injection system, the self-diagnostic function immediately operates the engine with alternate operating instructions and the engine trouble warning light comes on to alert the rider of the malfunction. Once a malfunction has been detected, its corresponding fault code is stored in the memory of the ECU.

- To alert the rider that the fuel injection system is not functioning, the engine trouble warning light flashes when the start switch is pushed to start the engine.
- If a malfunction is detected in the fuel injection system, the ECU provides the proper alternate operating instructions necessary to operate the engine and the engine trouble warning light comes on to alert the rider of the malfunction.
- After the engine has been turned off, the lowest fault code appears on the odometer/fuel reserve tripmeter/tripmeter 2 LCD. Once a fault code has been displayed, it remains stored in the memory of the ECU until it is deleted.

EAS00900
Engine trouble warning light indication and FI system operation

Engine trouble warning light	ECU operation	FI operation	Vehicle operation
Flashes*	Warning provided when unable to start engine	Operation stopped	Cannot be operated
Remains on	Malfunction detected	Operated with alternate characteristics in accordance with the description of the malfunction	Can or cannot be operated depending on the fault code

* The warning light flashes if any one of the following conditions is present and the start switch is pushed:

12: Crankshaft position sensor
19: Sidestand switch
(open circuit in the wire to the ECU)
30: Lean angle cut-off switch
(latch up detected)
41: Lean angle cut-off switch
(open or short circuit)
50: ECU internal malfunction
(faulty ECU memory)

http://manuals.magnamaniac.com

EAS00901
Checking for a defective engine trouble warning light bulb
The engine trouble warning light comes on for 1.4 seconds after the main switch is turned to “ON” or when the start switch is pushed. If the warning light does not come on under these conditions, the warning light bulb may be defective.

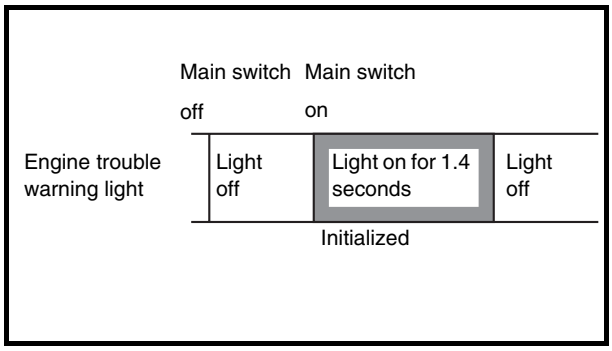

EAS00902
ALTERNATE OPERATION CONTROL (FAIL-SAFE ACTION)
If the ECU detects an abnormal signal from a sensor while the motorcycle is being driven, the ECU illuminates the engine trouble warning light and it provides the engine with alternate operating instructions, according to the malfunction.
When an abnormal signal is received from a sensor, the ECU processes the specified values that are programmed for each sensor in order to provide the engine with the alternate operating instructions that enable the engine to continue to operate or stop operating, depending on the conditions.
The ECU applies the fail-safe actions in two ways: one in which the sensor output is set to a prescribed value, and the other in which the ECU directly operates an actuator. Details on the fail-safe actions are given in the table below.

FAIL-SAFE ACTION TABLE
Self-diagnostic function

Fault code No.	Item	Symptom	Fail-safe action	Startability	Driveability
12	Crankshaft position sensor	No normal signals are received from the sensor.	—	No	No
13	Intake air pressure sensor (open or short circuit)	Open or short circuit is detected.	• Fixes the intake air pressure to 101 kPa (760 mmHg, 29.9 inHg).	Yes	Yes
14	Intake air pressure sensor	Intake air pressure sensor hose is clogged or disconnected, causing the constant application of atmospheric pressure to the sensor.	• Fixes the intake air pressure to 101 kPa (760 mmHg, 29.9 inHg).	Yes	Yes
15	Throttle position sensor (open or short circuit)	Open or short circuit is detected.	• Fixes the throttle position sensor to fully open.	Yes	Yes
16	Throttle position sensor (stuck)	The throttle position sensor is detected stuck.	• Fixes the throttle position sensor to fully open.	Yes	Yes
19	Broken or disconnected blue/black lead of the ECU	Open circuit in the input line (blue/black) of the ECU is detected.	—	No	No
21	Coolant temperature sensor	Open or short circuit is detected.	• Fixes the coolant temperature to 80 °C (176 °F).	Yes	Yes
22	Intake air temperature sensor	Open or short circuit is detected.	• Fixes the intake air temperature to 20 °C (68 °F).	Yes	Yes

http://manuals.magnamaniac.com

Fault code No.	Item	Symptom	Fail-safe action	Startability	Driveability
30	Lean angle cut-off switch (latch up detected)	The motorcycle has overturned.	—	No	No
33	Faulty ignition	Open circuit is detected in the primary lead of the ignition coil.	—	No	No
41	Lean angle cut-off switch (open or short circuit)	Open or short circuit is detected.	—	No	No
42	Speed sensor, neutral switch	No normal signals are received from the speed sensor or an open or short circuit is detected in the neutral switch.	• Fixes the gear to the top gear.	Yes	Yes
43	Fuel system voltage (monitor voltage)	The ECU is unable to monitor the battery voltage (open circuit in the wire to the ECU).	• Fixes the battery voltage to 12 V.	Yes	Yes
44	Error in writing the amount of CO adjustment on EEPROM	An error is detected while reading or writing on EEPROM (CO adjustment value).	—	Yes	Yes
46	Vehicle system power supply (monitor voltage)	Power supply to the fuel injection system relay is not normal.	—	Yes	Yes
50	ECU internal malfunction (memory check error)	Faulty ECU memory. When this malfunction is detected, the code number might not appear on the meter.	—	No	Yes
—	Start unable warning	Relay is not turned ON even if the crank signal is input while the start switch is turned ON. When the start switch is turned ON while an error is detected with the fault code of No. 12, 19, 33, 41 or 50.	• Engine trouble warning light flashes when the start switch is turned ON.	No	No

Communication error with the meter

Fault code No.	Item	Symptom	Fail-safe action	Startability	Driveability
Er-1	ECU internal malfunction (output signal error)	No signals are received from the ECU.	—	No	No
Er-2	ECU internal malfunction (output signal error)	No signals are received from the ECU within the specified duration.	—	No	No
Er-3	ECU internal malfunction (output signal error)	Data from the ECU cannot be received correctly.	—	No	No
Er-4	ECU internal malfunction (input signal error)	Non-registered data has been received from the meter.	—	No	No

http://manuals.magnamaniac.com

EAS00904
TROUBLESHOOTING CHART

Engine operation is not normal or the engine trouble warning light is on.
The engine trouble warning light may not come on even if the engine operation is not normal.

The engine trouble warning light comes on.

Check the fault code number displayed on the meter.

Identify the system with the malfunction.
Refer to “FAIL-SAFE ACTION TABLE”.

Identify the probable cause of the malfunction.
Refer to “Diagnostic monitoring code table”.

Check and repair the probable cause of the malfunction.

Fault code No. is indicated.	Fault code No. is not indicated.
Check and repair. Refer to “TROUBLESHOOTING DETAILS”. Monitor the operation of the sensors and the actuators in the diagnostic mode. Refer to “Diagnostic mode table”.	Check and repair. Refer to “FAIL-SAFE ACTION TABLE”.

Perform the ECU reinstatement action.
Refer to “Restore method” in “TROUBLESHOOTING DETAILS”.

Set the main switch to “OFF”, set it back to “ON”, and then check if the fault code number is still displayed on the meter.

Fault code number displayed

No fault code number displayed

The engine trouble warning light does not come on.

Check the operation of the following sensors and actuators in the diagnostic mode. Refer to “Diagnostic mode table”.
01: Throttle position sensor (throttle angle)
07: Vehicle speed pulse
09: Fuel system voltage
21: Neutral switch
30: Ignition coil
36: Fuel injector
48: Air induction system solenoid

OK

Malfunction of the engine

Check and repair the inner parts of the engine. Refer to chapter 5.

OK

NG

Defective sensor or actuator

Check and repair the corresponding sensor or actuator.

OK

Check the engine condition.

OK

Repairs completed

Erase the malfunction history.*
The malfunction history is stored even if the main switch is set to “OFF”. The malfunction history must be erased in the diagnostic mode. Refer to “Diagnostic mode table (Diagnostic code No. 62)”.

* Operated when the engine trouble warning light is on.

http://manuals.magnamaniac.com

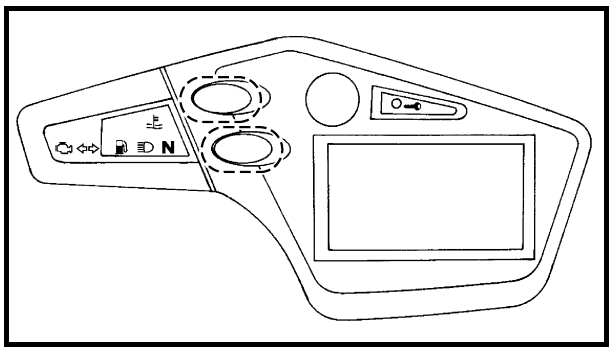

EAS00905
DIAGNOSTIC MODE

Setting the diagnostic mode

1. Set the main switch to “OFF” and set the engine stop switch to “ ”.
2. Disconnect the wire harness coupler from the fuel pump.
3. Simultaneously press and hold the “SELECT” and “RESET” buttons, turn the main switch to “ON”, and continue to press the buttons for 8 seconds or more.

NOTE:

All displays on the meter disappear “dIAG” appears on the odometer/fuel reserve tripmeter/tripmeter 2 LCD.

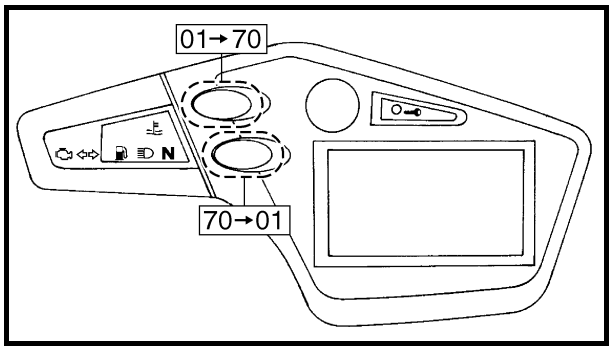

4. Press the “SELECT” button to select the CO adjustment mode “Co” or the diagnostic mode “dIAG”.
5. After selecting “dIAG”, simultaneously press the “SELECT” and “RESET” buttons for 2 seconds or more to execute the selection.
6. Set the engine stop switch to “ ”.
7. Select the diagnostic code number that applies to the item that was verified with the fault code number by pressing the “SELECT” and “RESET” buttons.

NOTE:

The diagnostic code number appears on the odometer/fuel reserve tripmeter/tripmeter 2 LCD (01-70).

- To decrease the selected diagnostic code number, press the “SELECT” button. Press the “SELECT” button for 1 second or longer to automatically decrease the diagnostic code numbers.
- To increase the selected diagnostic code number, press the “RESET” button. Press the “RESET” button for 1 second or longer to automatically increase the diagnostic code numbers.

http://manuals.magnamaniac.com

8. Verify the operation of the sensor or actuator.
   - Sensor operation
     The data representing the operating conditions of the sensor appears on the odometer/fuel reserve tripmeter/tripmeter 2 LCD.
   - Actuator operation
     Set the engine stop switch to "◯" to operate the actuator.

NOTE:
If the engine stop switch is set to "◯", set it to "⊗", and then set it to "◯" again.

9. Set the main switch to "OFF" to cancel the diagnostic mode.

http://manuals.magnamaniac.com

EAS00906
Diagnostic monitoring code table

Fault code No.	Symptom	Probable cause of malfunction	Diagnostic code
12	No normal signals are received from the crankshaft position sensor.	• Open or short circuit in wire harness • Defective crankshaft position sensor • Disconnected crankshaft position sensor coupler • Malfunction in A.C. magneto rotor • Malfunction in ECU • Improperly installed crankshaft position sensor	—
13	Open or short circuit is detected in the intake air pressure sensor.	• Open or short circuit in wire harness • Defective intake air pressure sensor • Disconnected intake air pressure sensor coupler • Malfunction in ECU	03
14	Faulty intake air pressure sensor hose system. • detected hose • clogged hose	• Disconnected, clogged, kinked, or pinched intake air pressure sensor hose • Defective intake air pressure sensor • Malfunction in ECU	03
15	Open or short circuit is detected in the throttle position sensor.	• Open or short circuit in wire harness • Defective throttle position sensor • Disconnected throttle position sensor coupler • Malfunction in ECU • Improperly installed throttle position sensor	01
16	Stuck throttle position sensor is detected.	• Stuck throttle position sensor • Improperly installed throttle position sensor • Malfunction in ECU	01
19	Open circuit in the input line (blue/black lead) of ECU is detected when the start switch is pushed.	• Open circuit in wire harness (ECU coupler) • Malfunction in ECU	20
21	Open or short circuit is detected in the coolant temperature sensor.	• Open or short circuit in wire harness • Defective coolant temperature sensor • Disconnected coolant temperature sensor coupler • Malfunction in ECU • Improperly installed coolant temperature sensor	06
22	Open or short circuit is detected in the intake air temperature sensor.	• Open or short circuit in wire harness • Defective intake air temperature sensor • Disconnected intake air temperature sensor coupler • Malfunction in ECU • Improperly installed intake air temperature sensor	05
30	The motorcycle has overturned.	• Overturned motorcycle • Malfunction in ECU	08
33	Open circuit is detected in the primary lead of the ignition coil.	• Open circuit in wire harness • Malfunction in ignition coil • Malfunction in ECU • Malfunction in a component of ignition cut-off circuit system	30
41	Open or short circuit is detected in the lean angle cut-off switch.	• Open or short circuit in wire harness • Defective lean angle cut-off switch • Disconnected lean angle cut-off switch coupler • Malfunction in ECU	08
42	No normal signals are received from the speed sensor or an open or short circuit is detected in the neutral switch.	• Open or short circuit in wire harness • Defective speed sensor • Disconnected speed sensor coupler • Malfunction in vehicle speed sensor detected unit • Defective neutral switch • Disconnected neutral switch connector • Malfunction in the engine side of the neutral switch • Malfunction in ECU	07 21
43	Power supply to the injector and fuel pump is not normal. (The ECU is unable to monitor the battery voltage.)	• Open circuit in wire harness • Malfunction in ECU • Defective fuel injection system relay	09, 50

http://manuals.magnamaniac.com

Fault code No.	Symptom	Probable cause of malfunction	Diagnostic code
44	An error is detected while reading or writing on EEPROM.	• Malfunction in ECU (The CO adjustment value is not properly written on or read from the internal memory.)	60
46	Power supply to the fuel injection system relay is not normal.	• Open circuit in wire harness • Malfunction in rectifier/regulator • Malfunction in A.C. magneto rotor Refer to “CHARGING SYSTEM” in chapter 8.	09
50	Faulty ECU memory. When this malfunction is detected, the code number might not appear on the meter.	• Malfunction in ECU (The program and data are not properly written on or read from the internal memory.)	—
Er-1	No signals are received from the ECU.	• Open or short circuit in sub-wire harness • Disconnected ECU coupler • Malfunction in meter • Malfunction in ECU	—
Er-2	No signals are received from the ECU within the specified duration.	• Improper connection in sub-wire harness • Disconnected ECU coupler • Malfunction in meter • Malfunction in ECU	—
Er-3	Data from the ECU cannot be received correctly.	• Improper connection in sub-wire harness • Disconnected ECU coupler • Malfunction in meter • Malfunction in ECU	—
Er-4	Non-registered data has been received from the meter.	• Improper connection in sub-wire harness • Disconnected ECU coupler • Malfunction in meter • Malfunction in ECU	—

EAS00907

Diagnostic mode table

Switch the meter display from the regular mode to the diagnostic mode. To switch the display, refer to “DIAGNOSTIC MODE”.

NOTE:

- Check the intake air temperature and coolant temperature as close as possible to the intake air temperature sensor and the coolant temperature sensor respectively.
- If it is not possible to check the intake air temperature, use the ambient temperature as reference.

Diagnostic code	Item	Action	Data displayed on meter (reference value)
01	Throttle angle	Displays the throttle angle. • Check with throttle fully closed. • Check with throttle fully open.	0 ~ 125 degrees • Fully closed (15 ~ 17 degrees) • Fully open (97 ~ 100 degrees)
03	Intake air pressure	Displays the intake air pressure. Set the engine stop switch to “○”. • Generate the pressure difference by cranking the engine with the start switch, but do not start the engine.	When the engine is stopped: Atmospheric pressure 101.3 kPa (760 mmHg, 30 inHg) When cranking the engine with start switch: 1.3 ~ 26.6 kPa (10 ~ 200 mmHg, 0.4 ~ 7.9 inHg)
05	Intake air temperature	Displays the intake air temperature. • Check the temperature in the air filter case.	Compare the temperature in the air filter case to the value displayed on the meter.
06	Coolant temperature	Displays the coolant temperature. • Check the coolant temperature.	Compare the coolant temperature to the value displayed on the meter.
07	Vehicle speed pulse	Displays the accumulation of the vehicle speed pulses that are generated when the tire is spun.	(0 ~ 199; resets to 0 after 199) OK if the numbers appear on the meter.

http://manuals.magnamaniac.com

Diagnostic code	Item	Action	Data displayed on meter (reference value)
08	Lean angle cut-off switch	Displays the lean angle cut-off switch values.	Upright: 0.4 ~ 1.4 V Overturned: 3.7 ~ 4.4 V
09	Fuel system voltage (battery voltage)	Displays the fuel system voltage (battery voltage). Set the engine stop switch to "○".	Approximately 12.0 V
20	Sidestand switch	Displays that the switch is on or off. (When the gear is in a position other than neutral.)	Stand retracted: On Stand extended: Off
21	Neutral switch	Displays that the switch is on or off.	Neutral: On In gear: Off
30	Ignition coil	The engine stop switch is set to "○", the ignition coil operates 5 times every second and the engine trouble warning light comes on. • Connect an ignition checker to the spark plug cap. • If the engine stop switch is set to "○", set it to "⊠", and then set it to "○" again.	Check that sparks are generated 5 times with the engine stop switch is set to "○".
36	Fuel injector	The engine stop switch is set to "○", the fuel injector operates 5 times every second and the engine trouble warning light comes on. • If the engine stop switch is set to "○", set it to "⊠", and then set it to "○" again.	Check that the operating sound of the fuel injector is generated 5 times when the engine stop switch is set to "○".
48	Air induction system	The engine stop switch is set to "○", the air induction system solenoid operates 5 times every second and the engine trouble warning light comes on. • If the engine stop switch is set to "○", set it to "⊠", and then set it to "○" again.	Check that the operating sound of the air induction system solenoid is generated 5 times when the engine stop switch is set to "○".
50	Fuel injection system relay	The engine stop switch is set to "○", the fuel injection system relay operates 5 times every second and the engine trouble warning light comes on (on when relay is operating, off when relay is not operating). • If the engine stop switch is set to "○", set it to "⊠", and then set it to "○" again.	Check that the operating sound of the fuel injection system relay is generated 5 times when the engine stop switch is set to "○".
51	Radiator fan motor relay	The engine stop switch is set to "○", the radiator fan motor relay operates 5 times, 5 seconds each time (2 seconds on, 3 seconds off), and the engine trouble warning light comes on. • If the engine stop switch is set to "○", set it to "⊠", and then set it to "○" again.	Check that the operating sound of the radiator fan motor relay is generated and that the radiator fan motor is operated 5 times when the engine stop switch is set to "○".
52	Headlight relay 1	The engine stop switch is set to "○", the headlight relay operates 5 times, 5 seconds each time (2 seconds on, 3 seconds off), and the engine trouble warning light comes on. • If the engine stop switch is set to "○", set it to "⊠", and then set it to "○" again.	Check that the operating sound of the headlight relay is generated and that the headlight comes on 5 times when the engine stop switch is set to "○".
60	E2PROM fault code display	• Transmits the abnormal portion of the data in the E2PROM that has been detected as fault code 44.	01 "00" is displayed when there is no malfunction.
61	Malfunction history code display	• Displays the codes of the history of the self-diagnosis malfunctions (i.e., a code of a malfunction that occurred once and which has been corrected). • If multiple malfunctions have been detected, different codes are displayed at 2-second intervals, and this process is repeated.	12 ~ 61 "00" is displayed when there is no malfunction.
62	Malfunction history code erasure	• Displays the total number of codes that are being detected through self diagnosis and the fault codes in the past history. • Erases only the history codes when the engine stop switch is set to "○". If the engine stop switch is set to "○", set it to "⊠", and then set it to "○" again.	00 ~ 17 "00" is displayed when there is no malfunction.
70	Control number	• Displays the program control number.	00 ~ 255

http://manuals.magnamaniac.com

EAS00908
TROUBLESHOOTING DETAILS

This section describes the countermeasures per fault code number displayed on the meter. Check and service the items or components that are the probable cause of the malfunction following the order in the “TROUBLESHOOTING CHART”.
After the checking and servicing the malfunctioning part, reset the meter display. Refer to “Restore method”.
Fault code No.:
Fault code number displayed on the meter when the engine failed to work normally. Refer to “Diagnostic monitoring code table”.
Diagnostic code No.:
Diagnostic code number to be used when the diagnostic mode is operated. Refer to “DIAGNOSTIC MODE”.

Fault code No.	12	Symptom	No normal signals are received from the crankshaft position sensor.
Used diagnostic code No. – –			

Order	Item/components	Check or maintenance job	Restore method
1	Crankshaft position sensor installation	Check the sensor for looseness or pinching.	Reinstated by cranking the engine.
2	Coupler connections Crankshaft position sensor coupler ECU coupler	Check the couplers for any pins that may have pulled out. Check that the couplers are securely locked. If necessary, repair the coupler or securely connect it.	
3	Open or short circuit in the wire harness	Repair or replace if there is an open or short circuit between the wire harnesses. Gray - Gray Green/White - Black/Blue	
4	Defective crankshaft position sensor	Replace the sensor if it is defective. Refer to “IGNITION SYSTEM” in chapter 8.	

http://manuals.magnamaniac.com

Fault code No.	13	Symptom	Open or short circuit is detected from the intake air pressure sensor.
Used diagnostic code No. 03 (intake air pressure sensor)			

Order	Item/components	Check or maintenance job	Restore method
1	Coupler connections Intake air pressure sensor coupler ECU coupler Sub-wire harness coupler	Check the couplers for any pins that may have pulled out. Check that the couplers are securely locked. If necessary, repair the coupler or securely connect it.	Reinstated by cranking the engine.
2	Open or short circuit in the wire harness	Repair or replace if there is an open or short circuit between the wire harnesses. Black/Blue - Black/Blue Pink/White - Pink/White Blue - Blue	
3	Defective intake air pressure sensor	Execute the diagnostic mode. (Code No. 03) Replace the sensor if it is defective. 1. Connect the pocket tester (DC 20 V) to the intake air pressure sensor coupler (wire harness end) as shown. **Positive tester probe → pink/white ①** **Negative tester probe → black/blue ②** 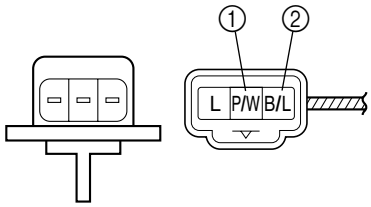 2. Set the main switch to “ON”. 3. Measure the intake air pressure sensor output voltage. **Intake air pressure sensor output voltage** **3.4 ~ 3.8 V** 4. Is the intake air pressure sensor OK?	

http://manuals.magnamaniac.com

Fault code No.	14	Symptom	Intake air pressure sensor hose is disconnected or clogged.

Used diagnostic code No. 03 (intake air pressure sensor)

Order	Item/components	Check or maintenance job	Restore method
1	Disconnected, clogged, kinked, or pinched intake air pressure sensor hose	Repair or replace the hose.	Reinstated by starting the engine and operating it at idle.
	Intake air pressure sensor malfunction at intermediate electrical potential	Check and repair the connection. Replace the sensor if there is a malfunction.	
2	Coupler connections Intake air pressure sensor coupler ECU coupler	Check the couplers for any pins that may have pulled out. Check that the couplers are securely locked. If necessary, repair the coupler or securely connect it.	
3	Defective intake air pressure sensor	Execute the diagnostic mode. (Code No. 03) Replace the sensor if it is defective. Refer to “Fault code No. 13”.	

Fault code No.	15	Symptom	Open or short circuit is detected from the throttle position senor.

Used diagnostic code No. 01 (throttle position sensor)

Order	Item/components	Check or maintenance job	Restore method
1	Throttle position sensor installation	Check the sensor for looseness or pinching. Check that the sensor is installed in the specified position.	Reinstated by setting the main switch to “ON”.
2	Coupler connections Throttle position sensor coupler ECU coupler	Check the connections of the couplers. Check that the couplers are securely locked. If necessary, repair the coupler or securely connect it.	
3	Open or short circuit in the wire harness	Repair or replace if there is an open or short circuit between the wire harnesses. Black/Blue - Black/Blue Yellow - Yellow Blue - Blue	
4	Check the throttle position sensor lead open circuit output voltage.	Check for an open circuit and replace the throttle position sensor, if necessary. Black/Blue - Yellow	

Open circuit item	Output voltage
Ground wire open circuit	5 V
Output wire open circuit	0 V
Power supply wire open circuit	0 V

5	Defective throttle position sensor	Execute the diagnostic mode. (Code No. 01) Replace the sensor if it is defective. Refer to “THROTTLE BODY ASSEMBLY”.	

http://manuals.magnamaniac.com

Fault code No.	16	Symptom	The throttle position sensor is detected stuck.
Used diagnostic code No. 01 (throttle position sensor)			
Order	Item/components	Check or maintenance job	Restore method
1	Defective throttle position sensor	Replace the sensor if it is defective. Refer to “THROTTLE BODY ASSEMBLY”.	Reinstated by starting the engine, operating it at idle, and then racing it.
2	Throttle position sensor installation	Execute the diagnostic mode. (Code No. 01) Check the sensor for looseness or pinching. Check that the sensor is installed in the specified position. Refer to “THROTTLE BODY ASSEMBLY”.	

Fault code No.	19	Symptom	Open circuit is detected in the input wire from the sidestand switch to the ECU.
Used diagnostic code No. 20 (sidestand switch)			
Order	Item/components	Check or maintenance job	Restore method
1	Coupler connections ECU coupler Blue/Black connector	Check the couplers for any pins that may have pulled out. Check that the couplers are securely locked. If necessary, repair the coupler or securely connect it.	If the transmission is in gear, it is reinstated by retracting the sidestand. If the transmission is in neutral, it is reinstated by reconnecting the wiring.
2	Open or short circuit in the wire harness	Repair or replace if there is an open or short circuit between the ECU and sidestand switch. Blue/Black	
3	Defective sidestand switch	Execute the diagnostic mode. (Code No. 20) Replace the switch if it is defective. Refer to “CHECKING THE SWITCHES” in chapter 8.	

Fault code No.	21	Symptom	Open or short circuit is detected from the coolant temperature sensor.
Used diagnostic code No. 06 (coolant temperature sensor)			
Order	Item/components	Check or maintenance job	Restore method
1	Coolant temperature sensor installation	Check the sensor for looseness or pinching.	Reinstated by setting the main switch to “ON’.
2	Coupler connections Coolant temperature sensor coupler ECU coupler	Check the coupler for any pins that may have pulled out. Check that the couplers are securely locked. If necessary, repair the coupler or securely connect it.	
3	Open or short circuit in the wire harness	Repair or replace if there is an open or short circuit between the wire harnesses. Black/Blue - Black/Blue Green/Red - Green/Red	
4	Defective coolant temperature sensor	Execute the diagnostic mode. (Code No. 06) Replace the sensor if it is defective. Refer to “COOLING SYSTEM” in chapter 8.	

http://manuals.magnamaniac.com

Fault code No.	22	Symptom	Open or short circuit is detected from the intake air temperature sensor.

Used diagnostic code No. 05 (intake air temperature sensor)

Order	Item/components	Check or maintenance job	Restore method
1	Intake air temperature sensor installation	Check the sensor looseness or pinching.	Reinstated by setting the main switch to “ON”.
2	Coupler connections Intake air temperature sensor coupler ECU coupler	Check the couplers for any pins that may have pulled out. Check that the couplers are securely locked. If necessary, repair the coupler or securely connect it.	
3	Open or short circuit in the wire harness	Repair or replace if there is an open or short circuit between the wire harnesses. Black/Blue - Black/Blue Brown/White - Brown/White	
4	Defective intake air temperature sensor	Execute the diagnostic mode. (Code No. 05) Replace the sensor if it is defective. 1. Remove the intake air temperature sensor from the air filter case. 2. Connect the pocket tester ($\Omega \times 100$) to the intake air temperature sensor terminal as shown. **Positive tester probe → brown/white ①** **Negative tester probe → black/blue ②** 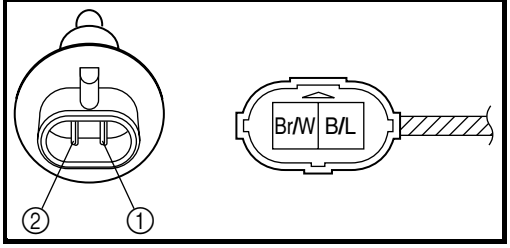 3. Measure the intake air temperature sensor resistance. **Intake air temperature sensor resistance** **2.21 ~ 2.69 Ω at 20 °C (68 °F)** **⚠ WARNING** **• Handle the intake air temperature sensor with special care.** **• Never subject the intake air temperature sensor to strong shocks. If the intake air temperature sensor is dropped, replace it.** 4. Is the intake air temperature sensor OK?	

http://manuals.magnamaniac.com

Fault code No.	30	Symptom	The motorcycle has overturned.
Used diagnostic code No. 08 (lean angle cut-off switch)			

Order	Item/components	Check or maintenance job	Restore method
1	The motorcycle has overturned.	Raise the motorcycle upright.	Reinstated by setting the main switch to “ON” (the engine cannot be started unless the main switch is first set to “OFF”).
2	Lean angle cut-off switch installation	Check the switch for looseness or pinching.	
3	Coupler connections Lean angle cut-off switch coupler ECU coupler	Check the coupler for any pins that may have pulled out. Check that the couplers are securely locked. If necessary, repair the coupler or securely connect it.	
4	Defective lean angle cut-off switch	Execute the diagnostic mode. (Code No. 08) Replace the switch if it is defective. Refer to “IGNITION SYSTEM” in chapter 8.	

Fault code No.	33	Symptom	Malfunction detected in the primary lead of the ignition coil.
Used diagnostic code No. 30 (ignition coil)			

Order	Item/components	Check or maintenance job	Restore method
1	Coupler and connector connections Ignition coil primary connector (Orange) ECU coupler	Check the coupler and connector for any pins that may have pulled out. Check the connector and coupler are securely locked. If necessary, repair the coupler or securely connect it.	Reinstated by starting the engine and operating it at idle.
2	Open or short circuit in the wire harness	Repair or replace if there is an open or short circuit between the wire harnesses. Orange - Orange	
3	Defective ignition coil	Execute the diagnostic mode. (Code No. 30) Test the primary and secondary coils for continuity. Replace the coil if it is defective. Refer to “IGNITION SYSTEM” in chapter 8.	

Fault code No.	41	Symptom	Open or short circuit is detected in the lean angle cut-off switch.
Used diagnostic code No. 08 (lean angle cut-off switch)			

Order	Item/components	Check or maintenance job	Restore method
1	Coupler connections Lean angle cut-off switch coupler ECU coupler	Check the couplers for any pins that may have pulled out. Check that the couplers are securely locked. If necessary, repair the coupler or securely connect it.	Reinstated immediately when it becomes normal.
2	Open or short circuit in the wire harness	Repair or replace if there is an open or short circuit between the wire harnesses. Black/Blue - Black/Blue Yellow/Green - Yellow/Green Blue - Blue	
3	Defective lean angle cut-off switch	Execute the diagnostic mode. (Code No. 08) Replace the switch if it is defective. Refer to “Fault code No. 30”.	

http://manualmagazine.info.com

Fault code No.	42	Symptom	A. No normal signals are received from the speed sensor. B. Open or short circuit is detected in the neutral switch.

Used diagnostic code No. 07 (speed sensor) → A1 ~ A4 / No. 21 (neutral switch) → B1 ~ B4

Order	Item/components	Check or maintenance job	Restore method
A-1	Coupler connections Speed sensor coupler ECU coupler	Check the couplers for any pins that may have pulled out. Check that the couplers are securely locked. If necessary, repair the coupler or securely connect it.	Reinstated by starting the engine, and inputting the vehicle speed signals by operating the motorcycle at 20 to 30 km/h (12.4 to 18.6 mi/h).
A-2	Open or short circuit in the wire harness	Repair or replace if there is an open or short circuit between the wire harnesses. Blue - Blue White - White Black/Blue - Black/Blue	
A-3	Gear for detecting vehicle speed has broken.	Replace the gear if it is defective. Refer to “TRANSMISSION” in chapter 5.	
A-4	Defective speed sensor	Execute the diagnostic mode. (Code No. 07) Replace the sensor if it is defective. 1. Measure the speed sensor output voltage. 2. Connect the pocket tester (DC 20 V) to the speed sensor coupler as shown. **Positive tester probe → pink ①** **Negative tester probe → black/white ②** 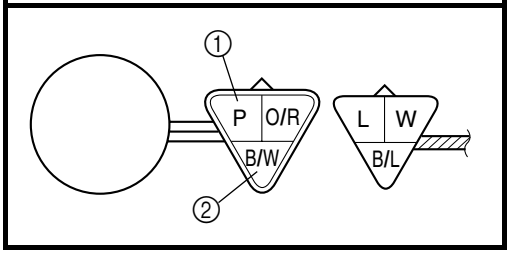 3. Set the main switch to “ON”. 4. Elevate the rear wheel and slowly rotate it. 5. Measure the speed sensor output voltage. **Speed sensor output voltage** **When sensor is on** **DC 4.8 V or more** **When sensor is off** **DC 0.6 V or less** 6. Is the speed sensor OK?	

http://manuals.magnamaniac.com

Fault code No.	42	Symptom	A. No normal signals are received from the speed sensor. B. Open or short circuit is detected in the neutral switch.

Used diagnostic code No. 07 (speed sensor) → A1 ~ A4 / No. 21 (neutral switch) → B1 ~ B4

Order	Item/components	Check or maintenance job	Restore method
B-1	Coupler connections Neutral switch connector Wiring harness ECU coupler	Check the couplers for any pins that may have pulled out. Check that the couplers are securely locked. If necessary, repair the coupler or securely connect it.	Reinstated by starting the engine, and inputting the vehicle speed signals by operating the motorcycle at 20 to 30 km/h (12.4 to 18.6 mi/h).
B-2	Open or short circuit in the wire harness	Repair or replace if there is an open or short circuit between the wire harnesses. between neutral switch and relay unit Sky blue - Sky blue between relay unit and ECU Blue/Yellow - Blue/Black	
B-3	Faulty shift drum (neutral detection area)	Replace if defective. Refer to “TRANSMISSION” in chapter 5.	
B-4	Defective neutral switch	Execute the diagnostic mode. (Code No. 21) Replace the switch if it is defective. Refer to “CHECKING THE SWITCHES” in chapter 8.	

http://manuals.magnamaniac.com

Fault code No.	43	Symptom	The ECU is unable to monitor the battery voltage.

Used diagnostic code No. 09, 50 (fuel system voltage)

Order	Item/components	Check or maintenance job	Restore method
1	Coupler connections Fuel injection system relay coupler Wiring harness ECU coupler	Check the couplers for any pins that may have pulled out. Check that the couplers are securely locked. If necessary, repair the coupler or securely connect it.	Reinstated by starting the engine and operating it at idle.
2	Defective main relay	Replace the relay if it is defective.	
3	Open or short circuit in the wire harness	Execute the diagnostic mode. (Code No. 09) Repair or replace if there is an open or short circuit: between battery and fuel injection system fuse Red - Red between fuel injection system fuse and fuel injection system relay Brown - Brown between fuel injection system relay and ECU Red/Blue - Red/Blue between battery and main switch Red - Red between main switch and ignition fuse Brown/Blue - Brown/Blue between ignition fuse and engine stop switch Red - Red between engine stop switch and fuel injection system relay Red/Black - Red/Black between fuel injection system relay and ECU Blue/Red - Blue/Red	
4	Malfunction or open circuit in the fuel injection system relay	Execute the diagnostic mode. (Code No. 50) Replace if defective. 1. Remove the relay unit. 2. Connect the pocket tester ($\Omega \times 1$) and battery (12 V) to the relay terminals as shown. **Positive battery terminal → red/black ①** **Negative battery terminal → blue/red ②** **Positive tester probe → brown ③** **Negative tester probe → red/blue ④** 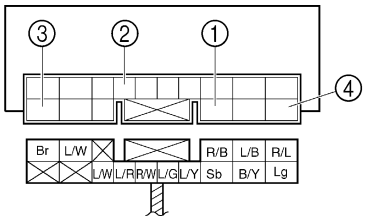 3. Does the diode have continuity between brown and red/blue? If there is no malfunction with the fuel injection system relay, replace the ECU.	

http://manuals.magnamaniac.com

Fault code No.	44	Symptom	Error is detected while reading or writing on EEPROM (CO adjustment value).
Used diagnostic code No. 60 (EEPROM improper cylinder indication)			
Order	Item/components	Check or maintenance job	Restore method
1	Malfunction in ECU	Execute the diagnostic mode. (Code No. 60) • Check the faulty cylinder. • Readjust the CO of the displayed cylinder. Refer to “ADJUSTING THE EXHAUST GAS VOLUME” in chapter 3. Replace the ECU if it is defective.	Reinstated by setting the main switch to “ON”.

Fault code No.	46	Symptom	Power supply to the FI system relay is not normal.
Used diagnostic code No. 09			
Order	Item/components	Check or maintenance job	Restore method
1	Faulty battery	Replace or change the battery. Refer to “CHECKING AND CHARGING THE BATTERY” in chapter 3.	Reinstated by starting the engine and operating it at idle.
2	Open or short circuit in the wire harness.	Excute the diagnostic mode. (Code No. 09) Repair or replace if there is an open or short circuit: between battery and fuel injection system fuse Red - Red between the fuel injection system fuse and fuel injection system relay Brown - Brown between the fuel injection system relay and ECU Red/Blue - Red/Blue	
3	Coupler connections ECU coupler	Check the coupler for any pins that may have pulled out. Check that the coupler is securely locked. If necessary, repair the coupler or securely connect it.	

Fault code No.	50	Symptom	Faulty ECU memory. (When this malfunction is detected in the ECU, the fault code number might not appear on the meter.)
Used diagnostic code No. – –			
Order	Item/components	Check or maintenance job	Restore method
1	Malfunction in ECU	Replace the ECU.	Reinstated by setting the main switch to “ON”.

http://manuals.magnamaniac.com

Fault code No.	Er-1	Symptom	No signals are received from the ECU.
Used diagnostic code No. – –			
Order	Item/components	Check or maintenance job	Restore method
1	Coupler connections ECU coupler Meter couplers	Check the couplers for any pins that may have pulled out. Check that the couplers are securely locked. If there is a malfunction, repair it and connect it securely.	Reinstated automatically when it receives a normal signal.
2	Malfunction in meter assembly	Replace the meter assembly.	Reinstated automatically when it receives a normal signal.
3	Malfunction in ECU	Replace the ECU.	

Fault code No.	Er-2	Symptom	No signals are received from the ECU within the specified duration.
Used diagnostic code No. – –			
Order	Item/components	Check or maintenance job	Restore method
1	Coupler connections ECU coupler Meter couplers	Check the couplers for any pins that may have pulled out. Check that the couplers are securely locked. If there is a malfunction, repair it and connect it securely.	Reinstated automatically when it receives a normal signal.
2	Malfunction in meter assembly	Replace the meter assembly.	
3	Malfunction in ECU	Replace the ECU.	

Fault code No.	Er-3	Symptom	Data from the ECU cannot be received correctly.
Used diagnostic code No. – –			
Order	Item/components	Check or maintenance job	Restore method
1	Coupler connections ECU coupler Meter couplers	Check the couplers for any pins that may have pulled out. Check that the couplers are securely locked. If there is a malfunction, repair it and connect it securely.	Reinstated automatically when it receives a normal signal.
2	Malfunction in meter assembly	Replace the meter assembly.	
3	Malfunction in ECU	Replace the ECU.	

Fault code No.	Er-4	Symptom	Non-registered data has been received from the meter.
Used diagnostic code No. – –			
Order	Item/components	Check or maintenance job	Restore method
1	Coupler connections ECU coupler Meter couplers	Check the couplers for any pins that may have pulled out. Check that the couplers are securely locked. If there is a malfunction, repair it and connect it securely.	Reinstated automatically when it receives a normal signal.
2	Malfunction in meter assembly	Replace the meter assembly.	
3	Malfunction in ECU	Replace the ECU.	

http://manuals.magnamaniac.com

EAS00909
THROTTLE BODY ASSEMBLY

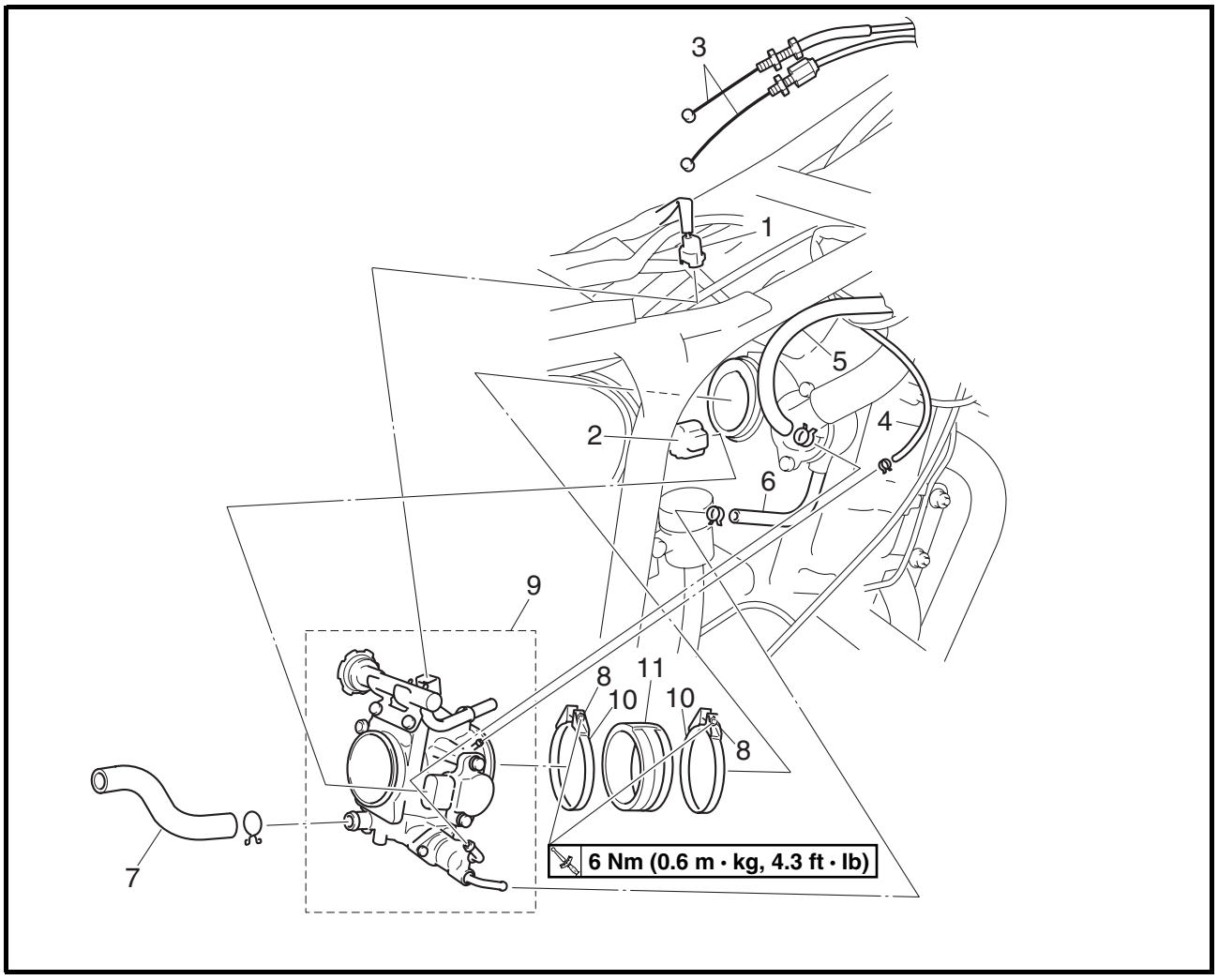

Order	Job/Part	Q'ty	Remarks
	Removing the throttle body assembly		Remove the parts in the order listed.
	Seat		Refer to "COWLING AND COVER" in chapter 3.
	Fuel tank		Refer to "FUEL TANK" in chapter 3.
	Air filter case		Refer to "AIR FILTER CASE" in chapter 3.
	Coolant		Drain. Refer to "CHANGING THE COOLANT" in chapter 3.
1	Fuel injector coupler	1	Disconnect.
2	Throttle position sensor coupler	1	Disconnect.
3	Throttle cable	2	Disconnect. Refer to "INSTALLING THE THROTTLE BODY ASSEMBLY".
4	Vacuum hose	1	Disconnect.

http://manuals.magnamaniac.com

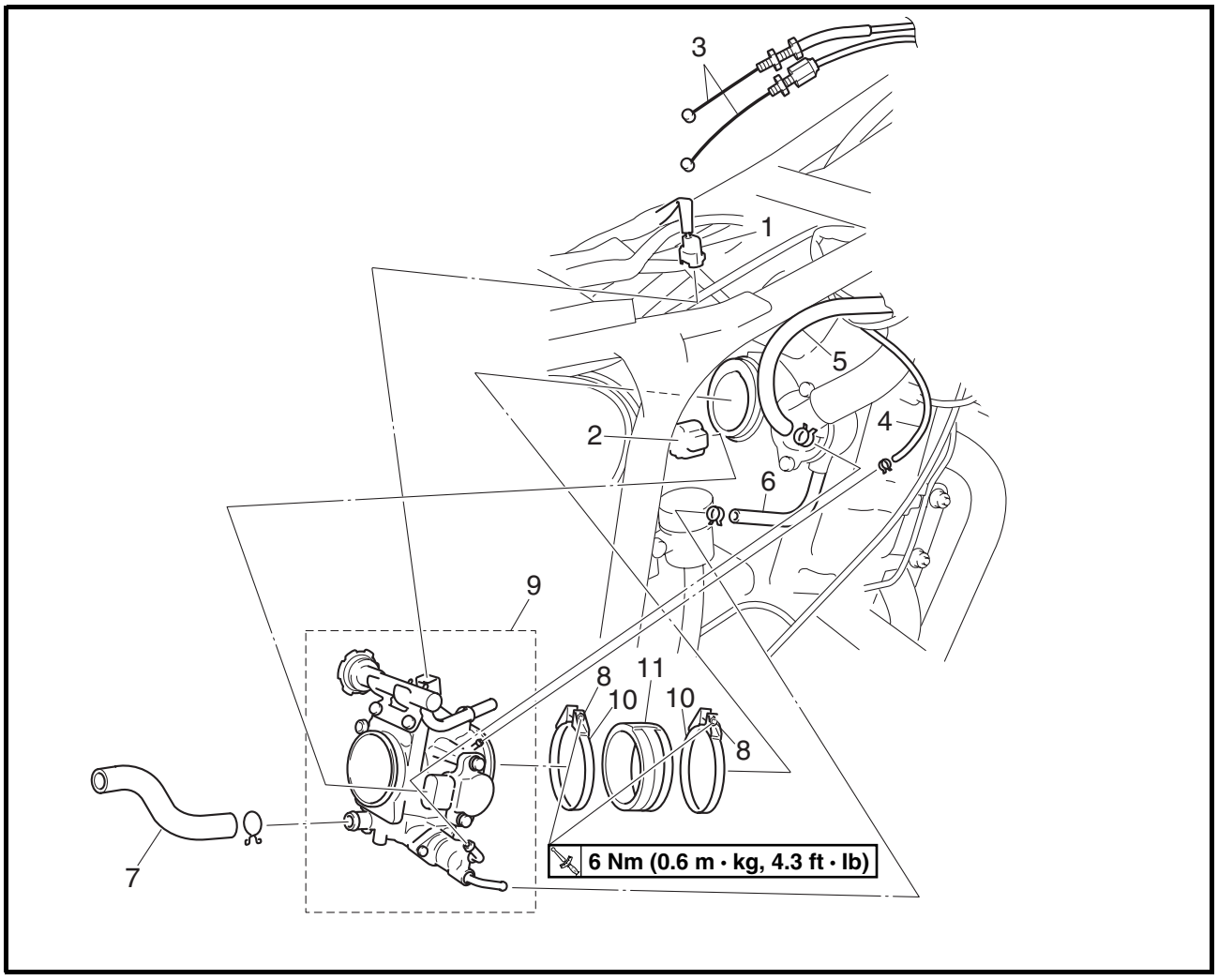

Order	Job/Part	Q'ty	Remarks
5	Fast idle plunger outlet hose	1	Disconnect.
6	Fast idle plunger inlet hose	1	
7	Pilot air hose	1	
8	Throttle body joint clamp screw	2	Loosen.
9	Throttle body assembly	1	Refer to "INSTALLING THE THROTTLE BODY ASSEMBLY".
10	Throttle body joint clamp	2	
11	Throttle body joint	1	
			For installation, reverse the removal procedure.

http://manuals.magnamaniac.com

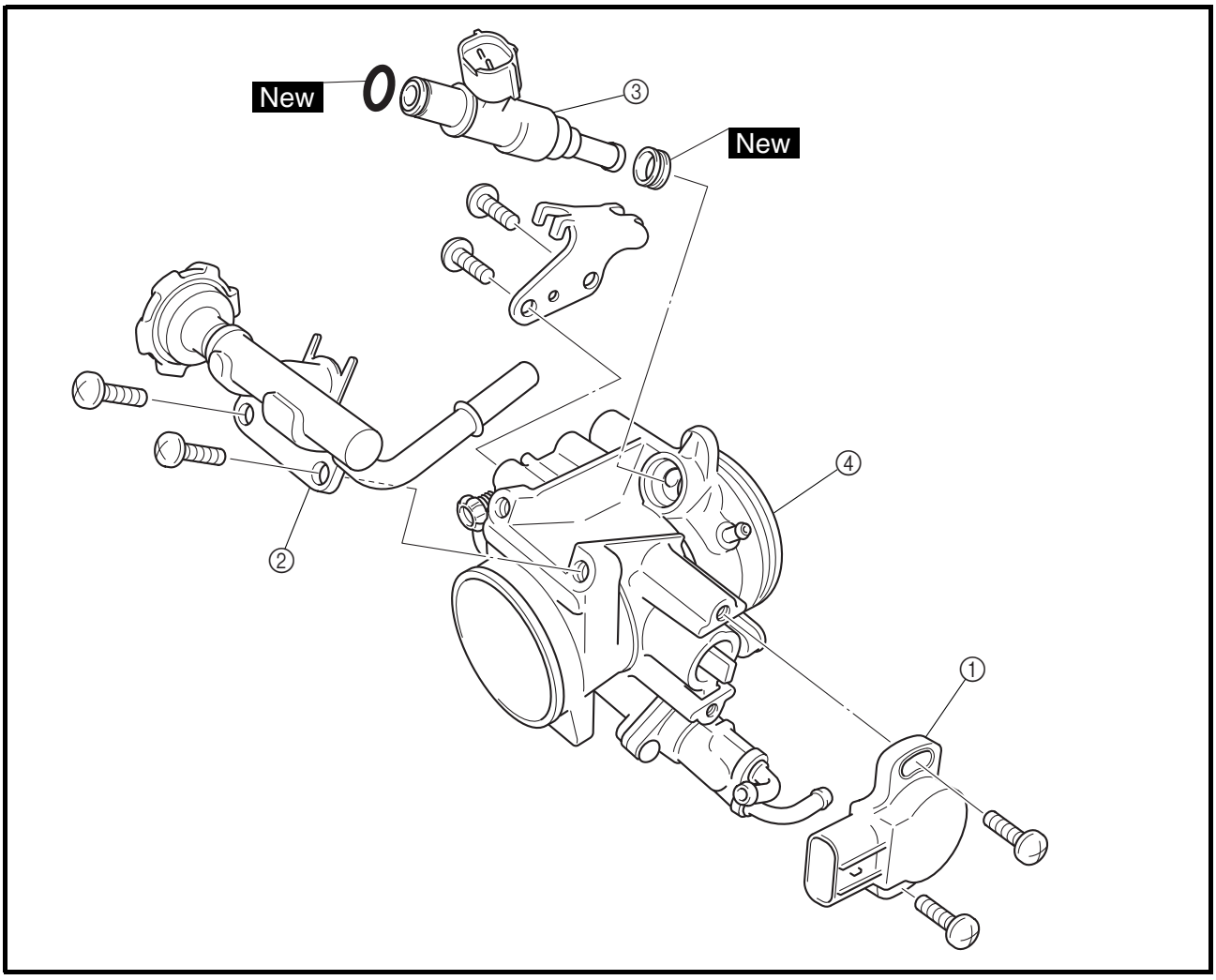

Order	Job/Part	Q'ty	Remarks
	Disassembling the throttle body assembly		Remove the parts in the order listed.
①	Throttle position sensor	1	
②	Fuel injection pipe	1	
③	Fuel injector	1	
④	Throttle body	1	**CAUTION:** **Do not disassemble the throttle body.**
			For assembly, reverse the disassembly procedure.

http://manuals.magnamaniac.com

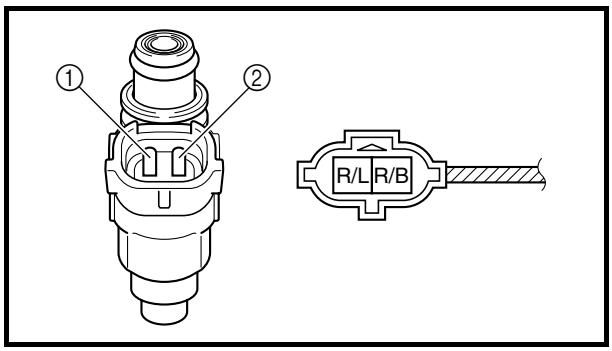

EAS00912
CHECKING THE FUEL INJECTOR

1. Check:
   - fuel injector
     Damage → Replace.
2. Check:
   - fuel injector resistance

▼▼▼▼▼▼▼▼▼▼▼▼▼▼▼▼▼▼▼▼▼▼▼▼▼▼▼▼▼▼▼▼▼▼

a. Disconnect the injection wire harness coupler from the fuel injector.
b. Connect the pocket tester (Ω × 1) to the fuel injector terminal as shown.

Positive tester probe → red/black ①
Negative tester probe → red/blue ②

c. Measure the fuel injector resistance.
   Out of specification → Replace the fuel injector.

Fuel injector resistance
12 Ω at 20 °C (68 °F)

▲▲▲▲▲▲▲▲▲▲▲▲▲▲▲▲▲▲▲▲▲▲▲▲▲▲▲▲▲▲▲▲▲▲

EAS00913
CHECKING THE THROTTLE BODY

1. Check:
   - throttle body
     Cracks/damage → Replace the throttle body.
2. Check:
   - fuel passages
     Obstructions → Clean.

▼▼▼▼▼▼▼▼▼▼▼▼▼▼▼▼▼▼▼▼▼▼▼▼▼▼▼▼▼▼▼▼▼▼

a. Wash the throttle body in a petroleum-based solvent

CAUTION:

Do not use any caustic carburetor cleaning solution.

b. Blow out all of the passages with compressed air.

http://manuals.magnamaniac.com

▲▲▲▲▲▲▲▲▲▲▲▲▲▲▲▲▲▲▲▲▲▲▲▲▲▲▲▲▲▲▲▲▲▲

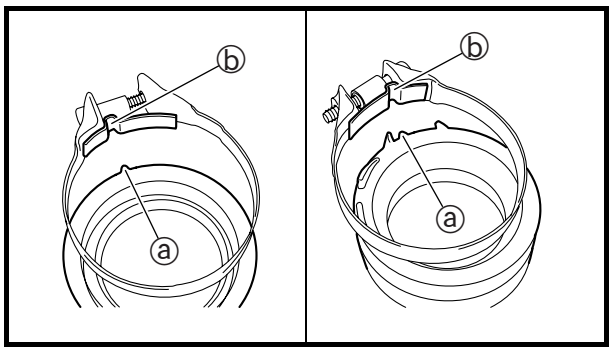

INSTALLING THE THROTTLE BODY ASSEMBLY

1. Install:
   - throttle body joint clamps

NOTE:
Align the projection ⓐ on the throttle body joint with the slot ⓑ in the throttle body joint clamp.

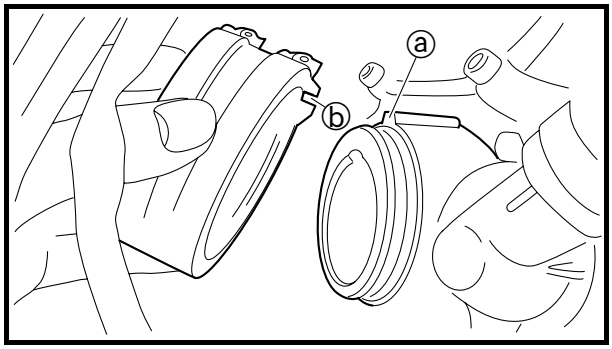

2. Install:
   - throttle body joint

NOTE:
Align the projection ⓐ on the cylinder head with the slot ⓑ in the throttle body joint.

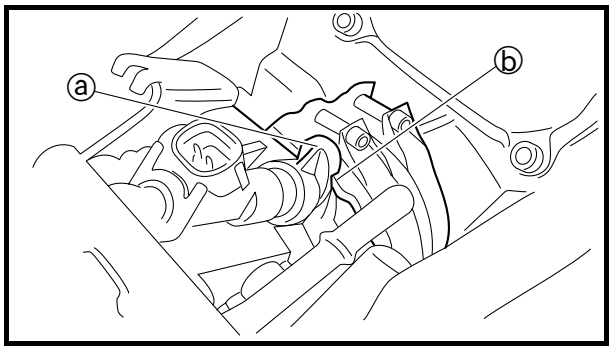

3. Install:
   - throttle body assembly

NOTE:
Align the projection ⓐ on the throttle body assembly with the slot ⓑ throttle body joint.

4. Install:
   - throttle cable
5. Adjust:
   - throttle lever free play
     Refer to “ADJUSTING THE THROTTLE CABLE FREE PLAY” in chapter 3.
6. Adjust:
   - engine idling speed
     Refer to “ADJUSTING THE ENGINE IDLING SPEED” in chapter 3.
7. Check:
   - throttle position sensor
     Refer to “CHECKING AND ADJUSTING THE THROTTLE POSITION SENSOR”.

http://manuals.magnamaniac.com

EAS00819
CHECKING THE FUEL PUMP

⚠ WARNING

Gasoline is extremely flammable and under certain circumstances there can be a danger of an explosion or fire. Be extremely careful and note the following points:
- **Stop the engine before refueling.**
- **Do not smoke, and keep away from open flames, sparks, or any other source of fire.**
- **If you do accidentally spill gasoline, wipe it up immediately with dry rags.**
- **If gasoline touches the engine when it is hot, a fire may occur. Therefore, make sure the engine is completely cool before performing the following test.**

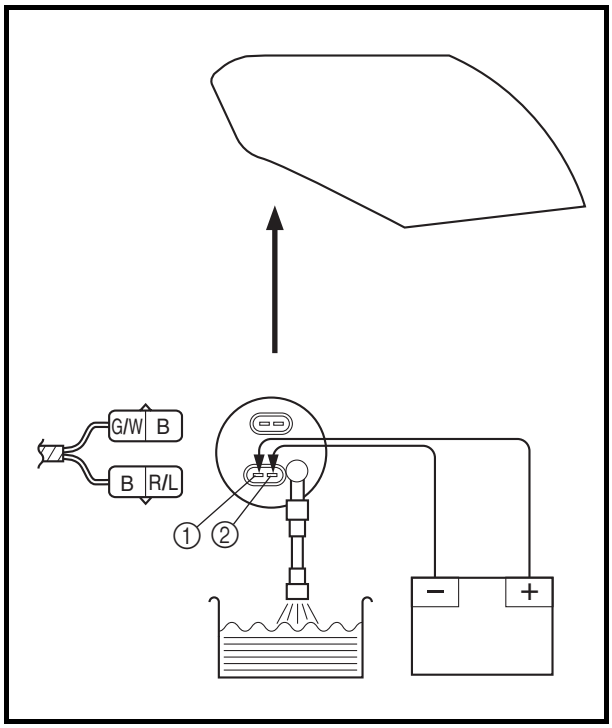

1. Check:
   - fuel pump operation

▼▼▼▼▼▼▼▼▼▼▼▼▼▼▼▼▼▼▼▼▼▼▼▼▼▼▼▼▼▼▼▼

a. Fill the fuel tank.
b. Put the end of the fuel hose into an open container.
c. Connect a battery (DC 12 V) to the fuel pump coupler as shown.

Positive battery lead → red/blue ①
Negative battery lead → black ②

d. If fuel flows out of the fuel hose, the fuel pump is OK. If fuel does not flow, replace the fuel pump.

▲▲▲▲▲▲▲▲▲▲▲▲▲▲▲▲▲▲▲▲▲▲▲▲▲▲▲▲▲▲▲▲

http://manuals.magnamaniac.com

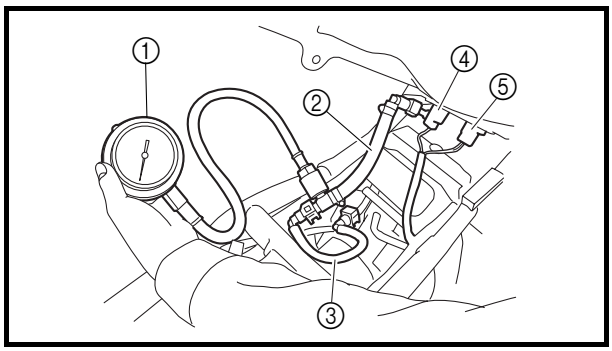

2. Check:
   • fuel pressure

▼▼▼▼▼▼▼▼▼▼▼▼▼▼▼▼▼▼▼▼▼▼▼▼▼▼▼▼▼▼▼▼▼▼

a. Remove the fuel tank.
   Refer to "FUEL TANK" in chapter 3.
b. Connect the pressure gauge ① to the adapter ②.
c. Connect the fuel pressure adapter to the fuel pump and fuel hose ③.

Pressure gauge
90890-03153
Fuel pressure adapter
90890-03176

d. Connect the fuel pump coupler ④ and fuel sender coupler ⑤ to the fuel pump.
   Refer to "FUEL TANK" in chapter 3.
e. Set the main switch to "ON" and the engine stop switch to "".
f. Start the engine.
g. Measure the fuel pressure.

Fuel pressure
324 kPa (3.24 kg/cm², 46.1 psi)

Out of specification → Replace the fuel pump.

▲▲▲▲▲▲▲▲▲▲▲▲▲▲▲▲▲▲▲▲▲▲▲▲▲▲▲▲▲▲▲▲▲▲

EAS00502
CHECKING AND ADJUSTING THE THROTTLE POSITION SENSOR

NOTE:
Before adjusting the throttle position sensor, the engine idling speed should be properly adjusted.

http://manuals.magnamaniac.com

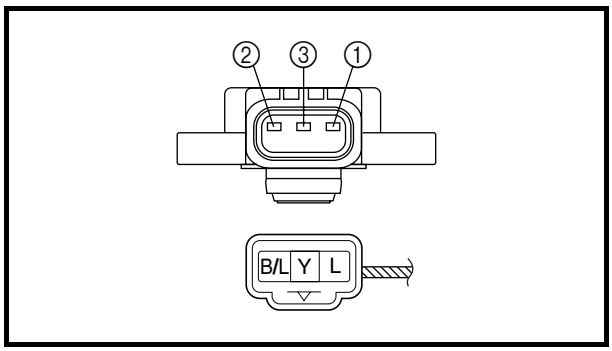

1. Check:
   - throttle position sensor
     (removed from the throttle body)

▼▼▼▼▼▼▼▼▼▼▼▼▼▼▼▼▼▼▼▼▼▼▼▼▼▼▼▼▼▼▼▼▼▼

a. Disconnect the throttle position sensor coupler from the throttle position sensor.
b. Remove the throttle position sensor from the throttle body.
c. Connect the pocket tester (Ω × 1k) to the throttle position sensor.

Positive tester probe → blue terminal ①
Negative tester probe → black/blue terminal ②

d. Measure the maximum throttle position sensor resistance.
   Out of specification → Replace the throttle position sensor.

Maximum throttle position sensor resistance
4.0 ~ 6.0 kΩ at 20 °C (68 °F)
(blue — black/blue)

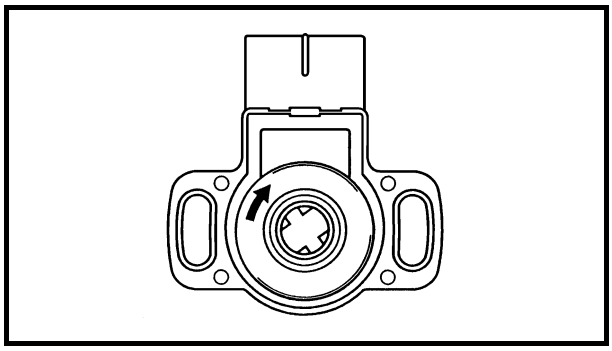

e. Connect the pocket tester (Ω × 1k) to the throttle position sensor.

Positive tester probe → yellow terminal ③
Negative tester probe → black/blue terminal ②

f. While slowly opening the throttle, check that the throttle position sensor resistance is within the specified range.
   The resistance does not change or it changes abruptly → Replace the throttle position sensor.
   The slot is worn or broken → Replace the throttle position sensor.

NOTE:
Check mainly that the resistance changes gradually when turning the throttle, since the readings (from closed to wide-open throttle) may differ slightly from those specified.

http://manuals.magnamaniac.com

Throttle position sensor resistance
0 ~ 5 ± 1.0 kΩ at 20 °C (68 °F)
(yellow — black/blue)

▲▲▲▲▲▲▲▲▲▲▲▲▲▲▲▲▲▲▲▲▲▲▲▲▲▲▲▲▲▲

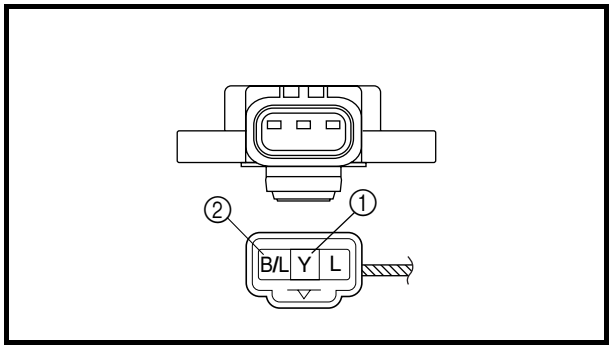

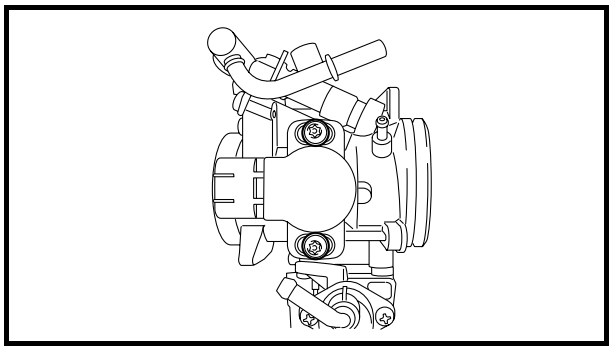

2. Adjust:
   • throttle position sensor angle

▼▼▼▼▼▼▼▼▼▼▼▼▼▼▼▼▼▼▼▼▼▼▼▼▼▼▼▼▼▼

a. Connecting the throttle position sensor coupler to the wire harness.
b. Connect the digital circuit tester to the throttle position sensor.

Positive tester probe →
yellow terminal ①
Negative tester probe →
black/blue terminal ②

Digital circuit tester
90890-03174

c. Measure the throttle position sensor voltage.
d. Adjust the throttle position sensor angle so the measured voltage is within the specified range.

Throttle position sensor voltage
0.63 ~ 0.73 V
(yellow — black/blue)

e. After adjusting the throttle position sensor angle, tighten the throttle position sensor screws.

▲▲▲▲▲▲▲▲▲▲▲▲▲▲▲▲▲▲▲▲▲▲▲▲▲▲▲▲▲▲

http://manuals.magnamaniac.com

EAS00507
AIR INDUCTION SYSTEM

AIR INJECTION

The air induction system burns unburned exhaust gases by injecting fresh air (secondary air) into the exhaust port, reducing the emission of hydrocarbons.
When there is negative pressure at the exhaust port, the reed valve opens, allowing secondary air to flow into the exhaust port. The required temperature for burning the unburned exhaust gases is approximately 600 to 700 °C (1,112 to 1,292 °F).

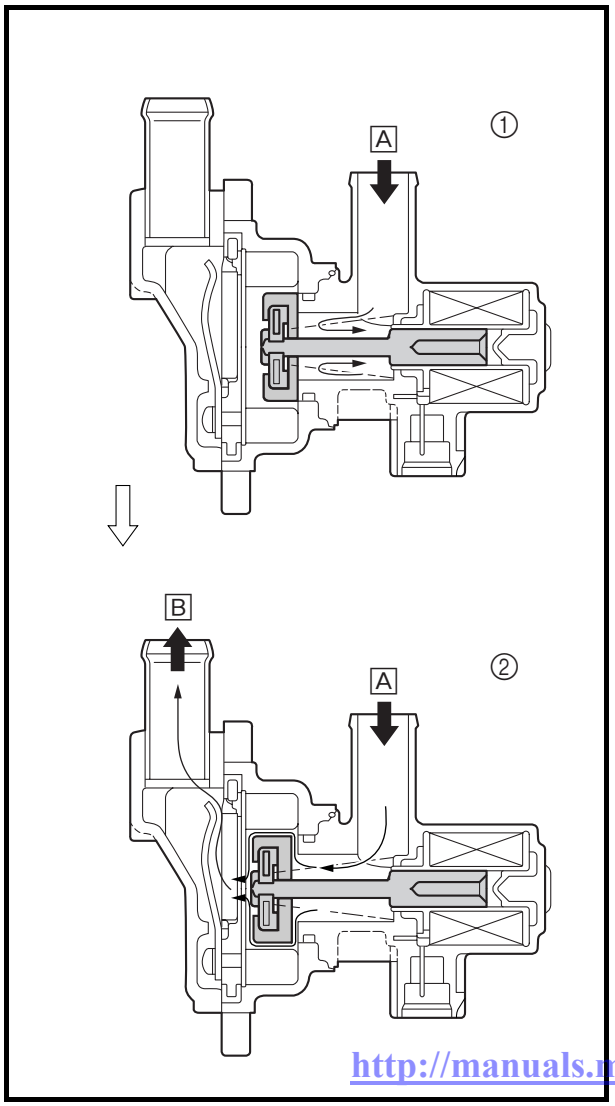

EAS00917
AIR CUT-OFF VALVE

The air cut-off valve is controlled by the signals from the ECU in accordance with the combustion conditions. Ordinarily, the air cut-off valve opens to allow the air to flow during idle and closes to cut-off the flow when the vehicle is being driven. However, if the coolant temperature is below the specified value, the air cut-off valve remains open and allows the air to flow into the exhaust pipe until the temperature becomes higher than the specified value.

A From the air filter case
B To the cylinder head
① The air cut-off valve is closed.
② The air cut-off valve is open.

http://manuals.magnamaniac.com

EAS00509
AIR INDUCTION SYSTEM DIAGRAMS

① Air filter case
② Reed valve
③ Air cut-off valve
④ Exhaust port

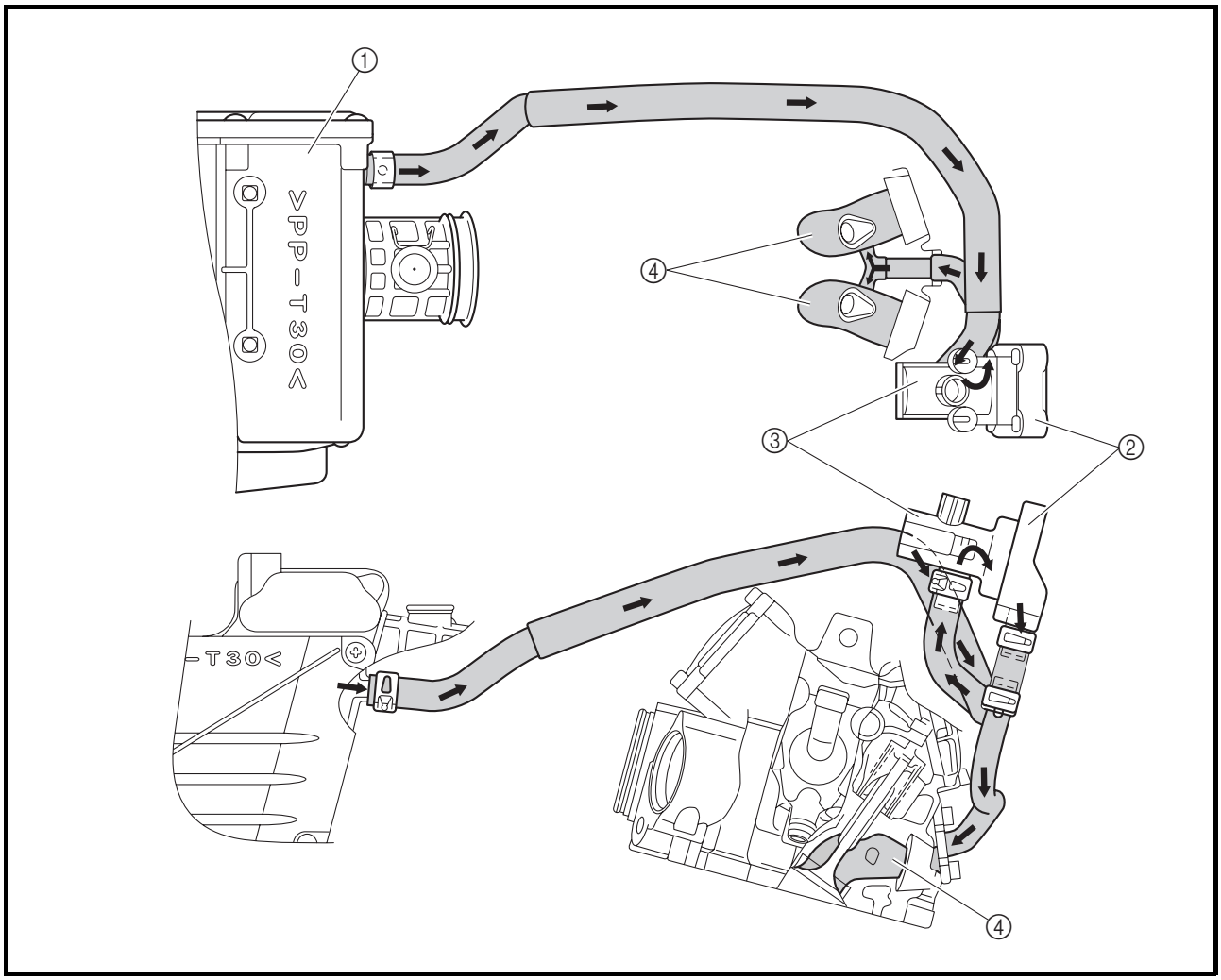

http://manuals.magnamaniac.com

AIR CUT-OFF VALVE ASSEMBLY

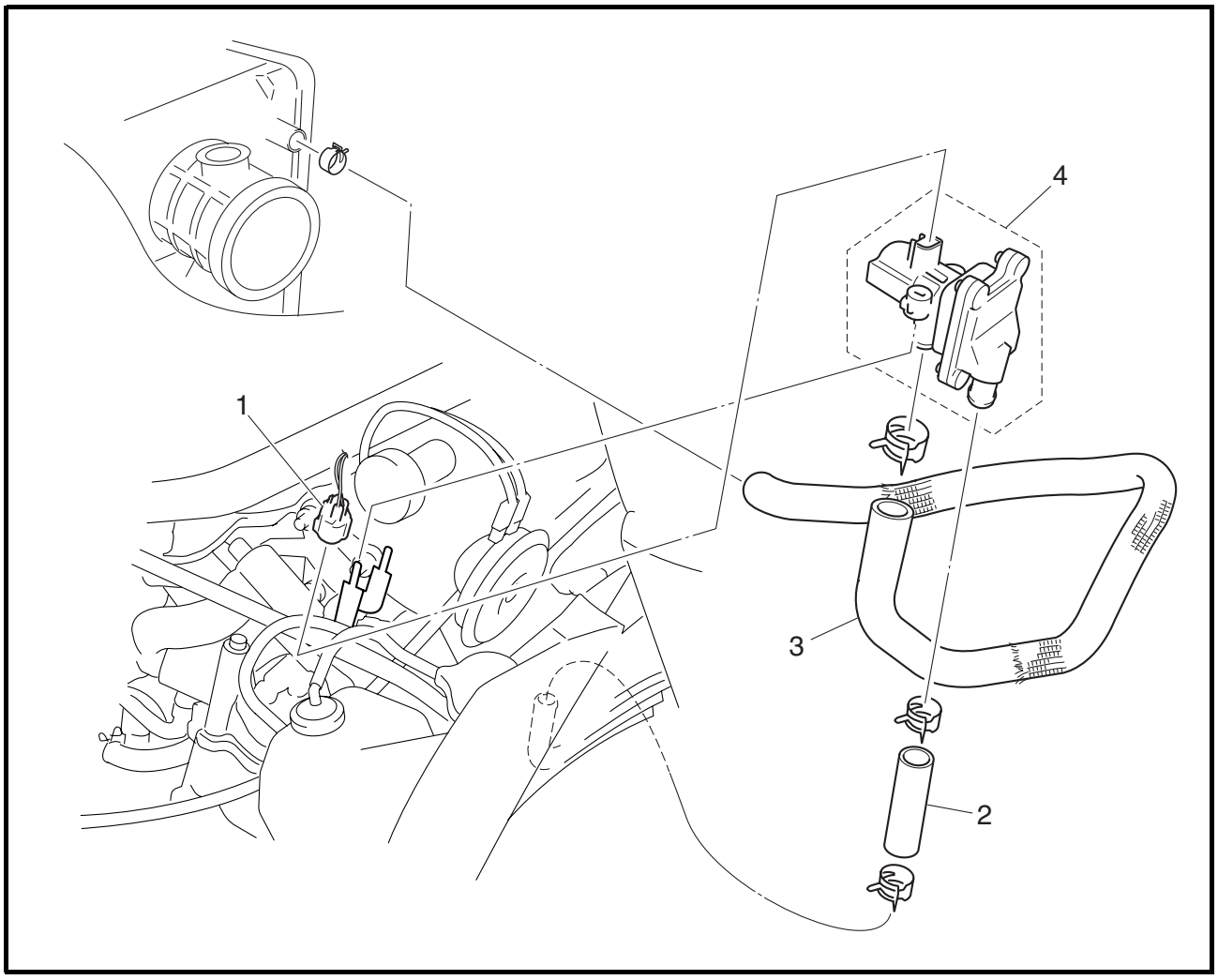

Order	Job/Part	Q'ty	Remarks
	Removing the air cut-off valve assembly		Remove the parts in the order listed.
	Right side panel		Refer to "COWLING AND COVER" in chapter 3.
	Fuel tank right side cover		Refer to "FUEL TANK" in chapter 3.
1	Air induction system solenoid coupler	1	Disconnect.
2	Air cut-off valve outlet hose	1	
3	Air-filter-to-air-cut-off-valve hose	1	
4	Air cut-off valve assembly	1	
			For installation, reverse the removal procedure.

http://manuals.magnamaniac.com

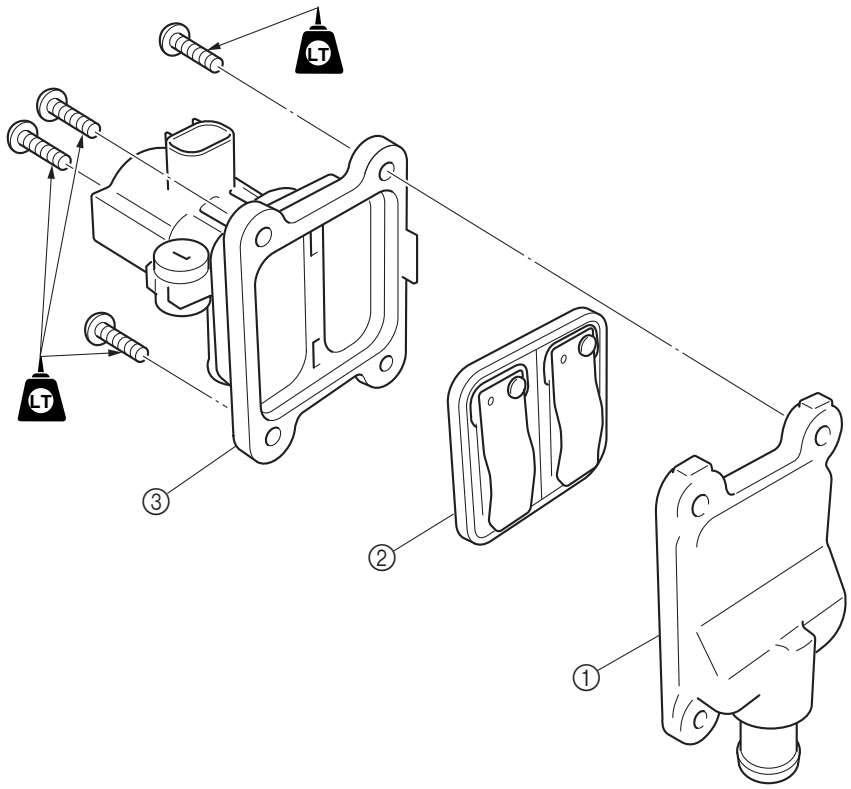

Order	Job/Part	Q'ty	Remarks
	Disassembling the air cut-off valve assembly		Remove the parts in the order listed.
①	Air cut-off valve cover	1	
②	Reed valve assembly	1	
③	Air cut-off valve	1	
			For assembly, reverse the disassembly procedure.

http://manuals.magnamaniac.com

EAS00918
CHECKING THE AIR INDUCTION SYSTEM

1. Check:
   - hoses
     Loose connections → Connect properly.
     Cracks/damage → Replace.
   - pipe
     Cracks/damage → Replace.
     Refer to "CYLINDER HEAD" in chapter 5.
2. Check:
   - reed valve
   - reed valve stopper
   - reed valve seat
     Cracks/damage → Replace the reed valve assembly.
3. Check:
   - air cut-off valve
     Cracks/damage → Replace.

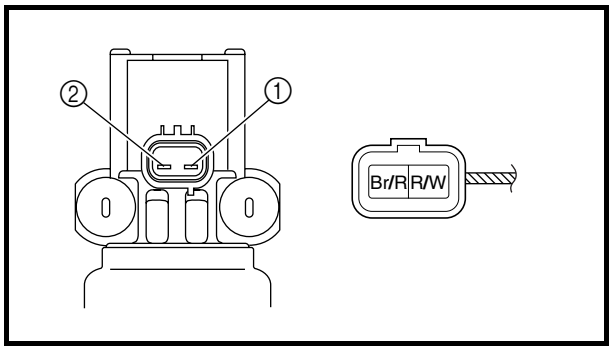

4. Check
   - Air induction system solenoid

▼▼▼▼▼▼▼▼▼▼▼▼▼▼▼▼▼▼▼▼▼▼▼▼▼▼▼▼▼▼▼▼

a. Remove the air induction system solenoid coupler from the air cut-off valve assembly.
b. Connect the pocket tester (Ω × 1) to the air induction system solenoid terminal as shown.

Positive tester probe → brown/red ①
Negative tester probe → red/white ②

c. Measure the air induction system solenoid resistance.
   Out of specification → Replace the air cut-off valve assembly.

Air induction system solenoid resistance
18 ~ 22 Ω at 20 °C (68 °F)

▲▲▲▲▲▲▲▲▲▲▲▲▲▲▲▲▲▲▲▲▲▲▲▲▲▲▲▲▲▲▲▲

http://manuals.magnamaniac.com

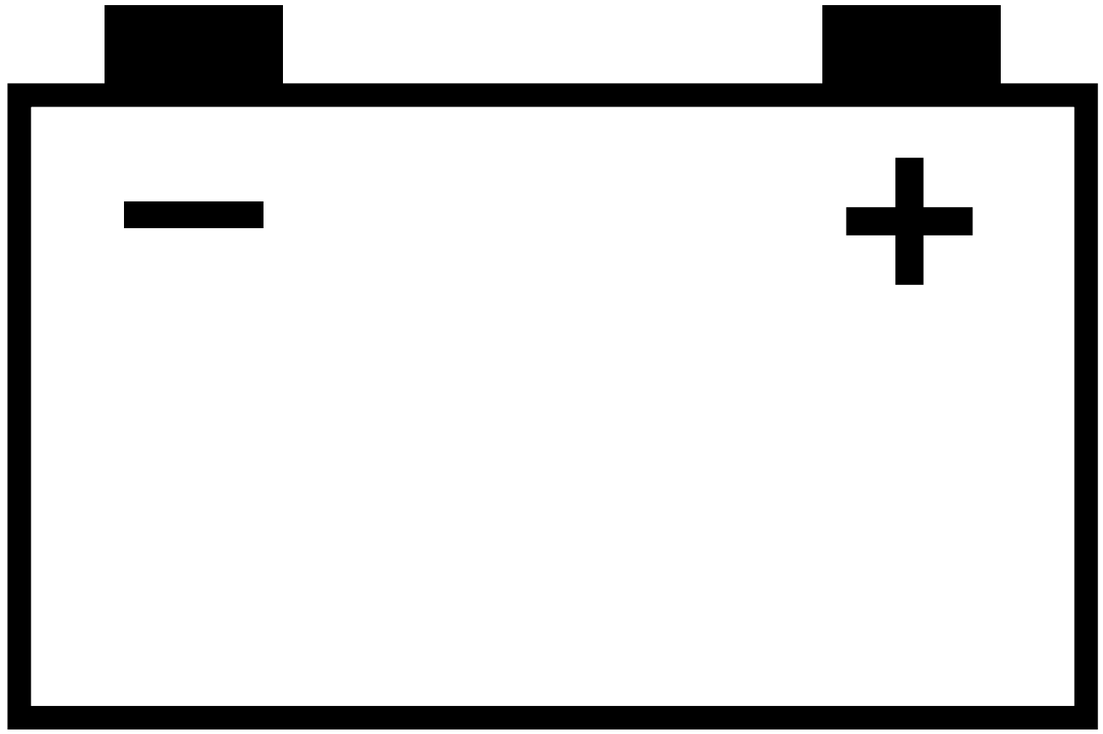

ELEC 8

http://manuals.magnamaniac.com

CHAPTER 8
ELECTRICAL SYSTEM

ELECTRICAL COMPONENTS 8-1

CHECKING SWITCH CONTINUITY 8-3

CHECKING THE SWITCHES 8-5

CHECKING THE BULBS AND BULB SOCKETS 8-7
- TYPES OF BULBS 8-7
- CHECKING THE CONDITION OF THE BULBS 8-8
- CHECKING THE CONDITION OF THE BULB SOCKETS 8-9
- CHECKING THE LEDs 8-9

IGNITION SYSTEM 8-12
- CIRCUIT DIAGRAM 8-12
- TROUBLESHOOTING 8-13

ELECTRIC STARTING SYSTEM 8-17
- CIRCUIT DIAGRAM 8-17
- STARTING CIRCUIT CUT-OFF SYSTEM OPERATION 8-18
- TROUBLESHOOTING 8-19

STARTER MOTOR 8-23
- CHECKING THE STARTER MOTOR 8-25
- ASSEMBLING THE STARTER MOTOR 8-27

CHARGING SYSTEM 8-28
- CIRCUIT DIAGRAM 8-28
- TROUBLESHOOTING 8-29

LIGHTING SYSTEM 8-31
- CIRCUIT DIAGRAM 8-31
- TROUBLESHOOTING 8-32
- CHECKING THE LIGHTING SYSTEM 8-34

SIGNALING SYSTEM 8-37
- CIRCUIT DIAGRAM 8-37
- TROUBLESHOOTING 8-39
- CHECKING THE SIGNALING SYSTEM 8-40

COOLING SYSTEM 8-49
- CIRCUIT DIAGRAM 8-49
- TROUBLESHOOTING 8-50

http://manuals.magnamaniac.com

IMMOBILIZER SYSTEM.....8-52
CIRCUIT DIAGRAM 8-52
GENERAL INFORMATION 8-53
KEY CODE REGISTRATION 8-54
SELF-DIAGNOSIS MALFUNCTION CODES.....8-57
TROUBLESHOOTING 8-58
CHECKING THE IMMOBILIZER SYSTEM 8-59

SELF-DIAGNOSIS.....8-63
TROUBLESHOOTING 8-64

http://manuals.magnamaniac.com

EAS00729

ELECTRICAL SYSTEM

ELECTRICAL COMPONENTS

① Spark plug
② Spark plug cap
③ Ignition coil
④ Intake air pressure sensor
⑤ Front brake light switch
⑥ Right handlebar switch
⑦ Immobilizer unit
⑧ Main switch
⑨ Fuel pump
⑩ Clutch switch
⑪ Left handlebar switch
⑫ Throttle position sensor
⑬ Coolant temperature sensor
⑭ Fuel injector
⑮ Lean angle cut-off switch
⑯ Turn signal/hazard relay
⑰ Headlight relay
⑱ Radiator fan motor relay
⑲ Relay unit
⑳ Battery
㉑ Fuse box 1

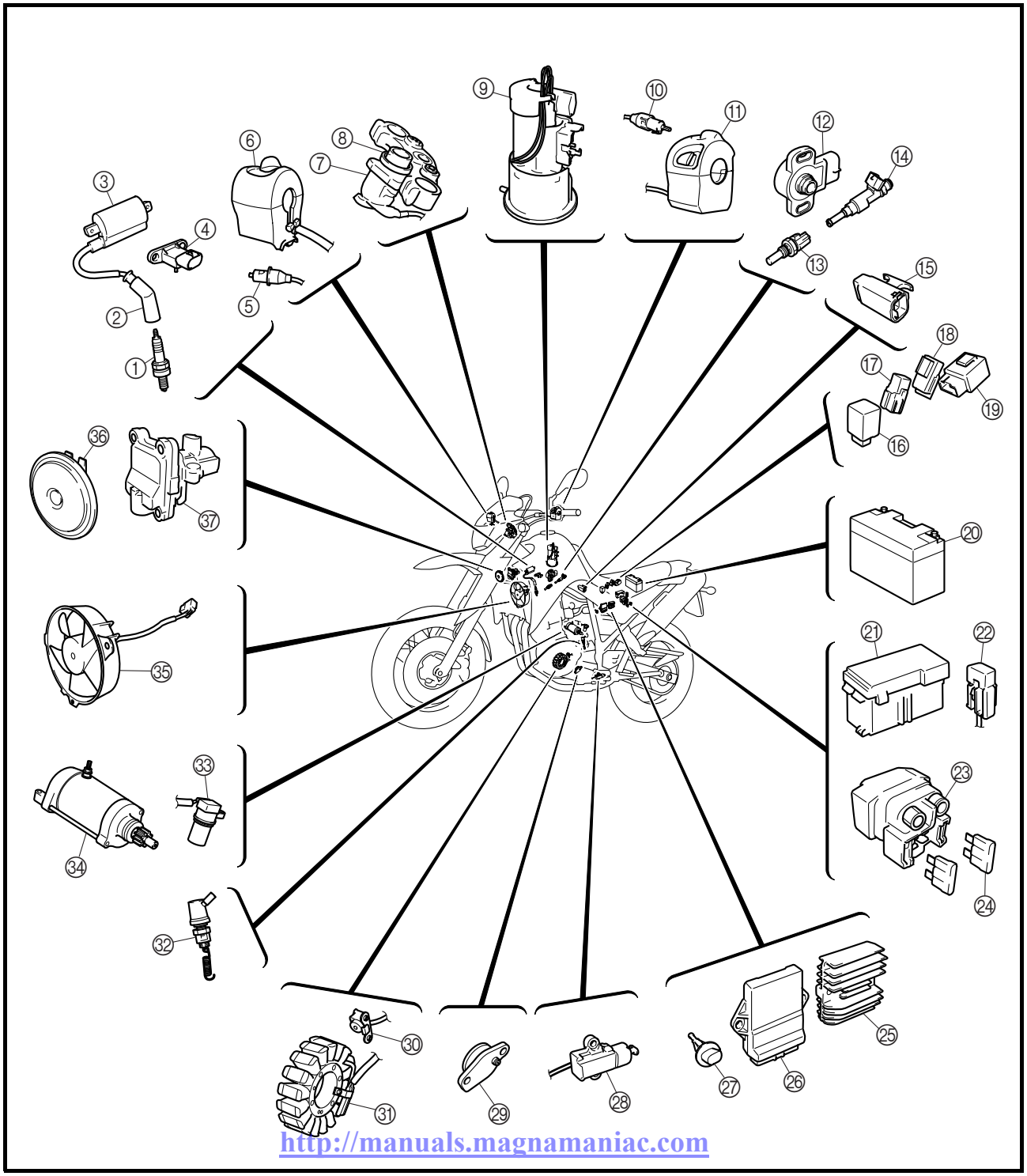

㉒ Fuse box 2
㉓ Starter relay
㉔ Main fuse
㉕ Rectifier/regulator
㉖ ECU
㉗ Intake air temperature sensor
㉘ Sidestand switch
㉙ Neutral switch
㉚ Crankshaft position sensor
㉛ Stator coil
㉜ Rear brake light switch
㉝ Speed sensor
㉞ Starter motor
㉟ Radiator fan motor
㊱ Horn
㊲ Air induction system solenoid

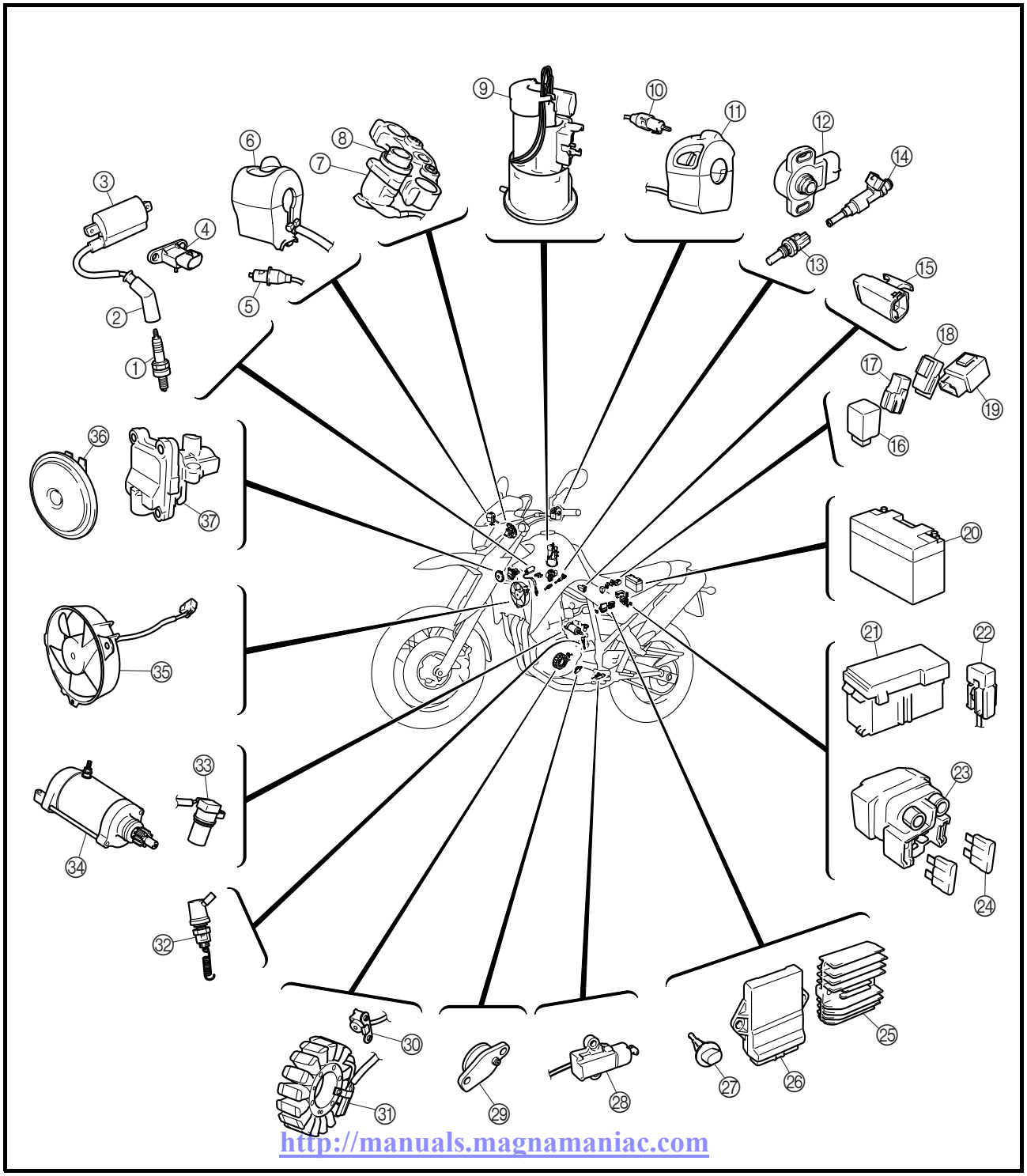

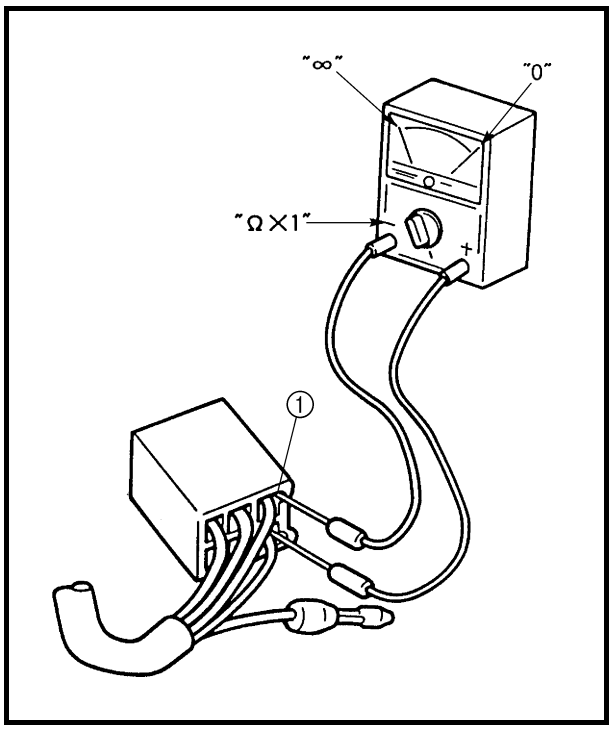

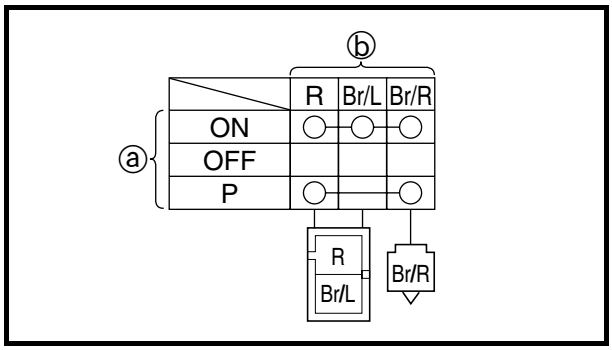

EAS00730

CHECKING SWITCH CONTINUITY

Check each switch for continuity with the pocket tester. If the continuity reading is incorrect, check the wiring connections and if necessary, replace the switch.

CAUTION:

Never insert the tester probes into the coupler terminal slots ①. Always insert the probes from the opposite end of the coupler, taking care not to loosen or damage the leads.

Pocket tester
90890-03112

NOTE:

- Before checking for continuity, set the pocket tester to "0" and to the "Ω × 1" range.
- When checking for continuity, switch back and forth between the switch positions a few times.

The terminal connections for switches (e.g., main switch, engine stop switch) are shown in an illustration similar to the one on the left.
The switch positions ⓐ are shown in the far left column and the switch lead colors ⓑ are shown in the top row in the switch illustration.

NOTE:

"○——○" indicates a continuity of electricity between switch terminals (i.e., a closed circuit at the respective switch position).

The example illustration on the left shows that:
There is continuity between red, brown/blue, and brown/red when the switch is set to "ON".
There is continuity between red and brown/red when the switch is set to "P".

http://manuals.magnamaniac.com

http://manuals.magnamaniac.com

EAS00731
CHECKING THE SWITCHES

Check each switch for damage or wear, proper connections, and also for continuity between the terminals. Refer to “CHECKING SWITCH CONTINUITY”.

Damage/wear → Repair or replace.
Improperly connected → Properly connect.
Incorrect continuity reading → Replace the switch.

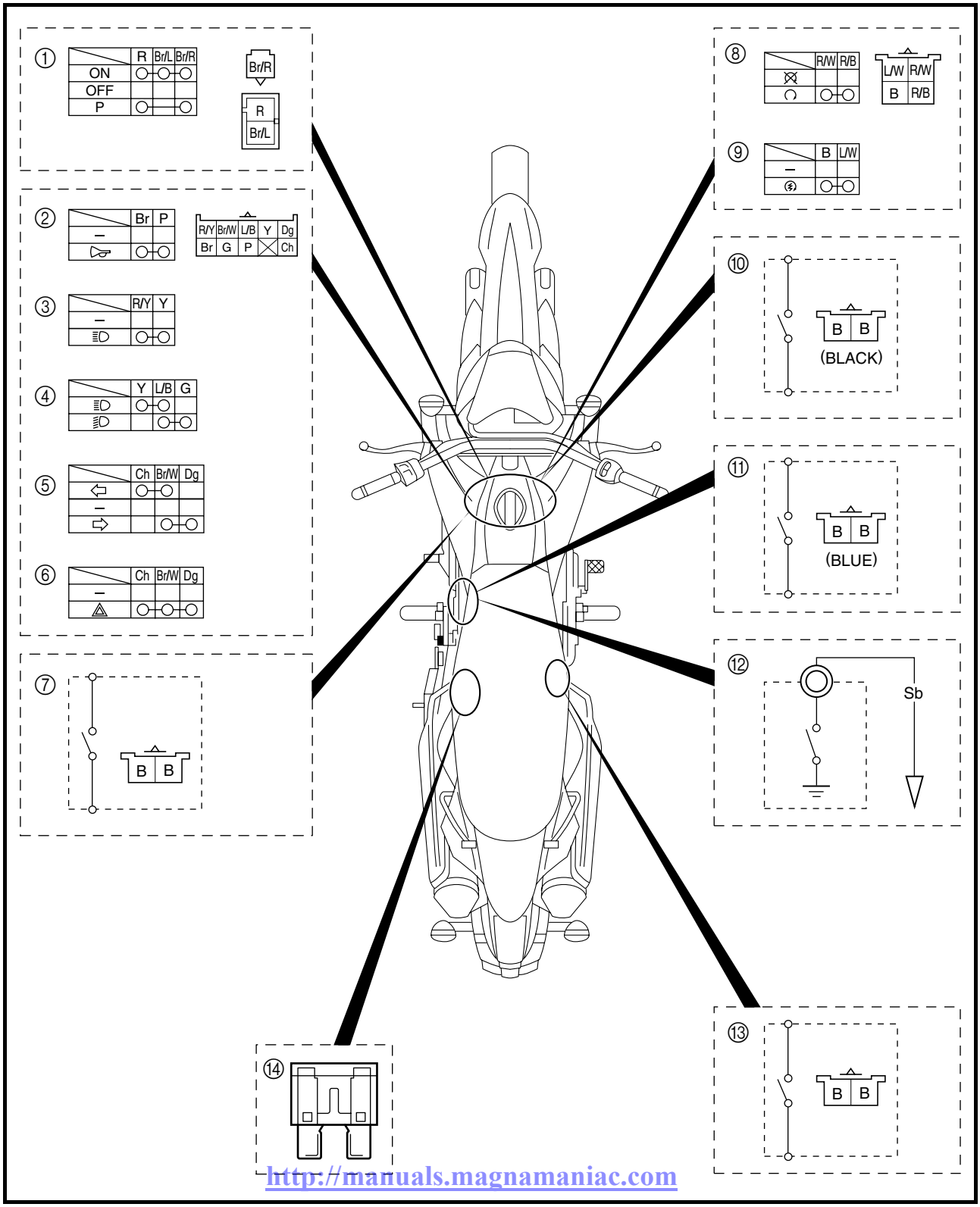

http://manuals.magnamaniac.com

① Main switch
② Horn switch
③ Pass switch
④ Dimmer switch
⑤ Turn signal switch
⑥ Hazard switch
⑦ Clutch switch
⑧ Engine stop switch
⑨ Start switch
⑩ Front brake light switch
⑪ Sidestand switch
⑫ Neutral switch
⑬ Rear brake light switch
⑭ Fuses

http://manuals.magnamaniac.com

EAS00732
CHECKING THE BULBS AND BULB SOCKETS

Check each bulb and bulb socket for damage or wear, proper connections, and also for continuity between the terminals.

Damage/wear → Repair or replace the bulb, bulb socket or both.
Improperly connected → Properly connect.
No continuity → Repair or replace the bulb, bulb socket or both.

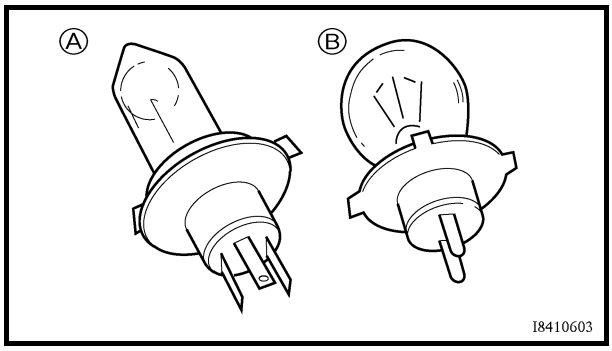

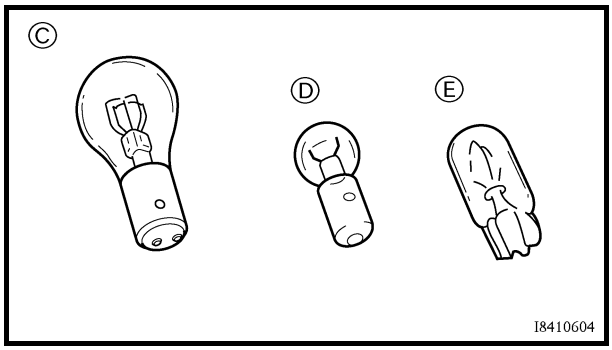

TYPES OF BULBS

The bulbs used on this motorcycle are shown in the illustration on the left.

- Bulbs Ⓐ and Ⓑ are used for the headlights and usually use a bulb holder that must be detached before removing the bulb. The majority of these types of bulbs can be removed from their respective socket by turning them counterclockwise.
- Bulb Ⓒ is used for turn signal and tail/brake lights and can be removed from the socket by pushing and turning the bulb counterclockwise.
- Bulbs Ⓓ and Ⓔ are used for meter and indicator lights and can be removed from their respective socket by carefully pulling them out.

http://manuals.magnamaniac.com

CHECKING THE CONDITION OF THE BULBS

The following procedure applies to all of the bulbs.

1. Remove:
   • bulb

⚠ WARNING

Since the headlight bulb gets extremely hot, keep flammable products and your hands away from the bulb until it has cooled down.

CAUTION:

- **Be sure to hold the socket firmly when removing the bulb. Never pull the lead, otherwise it may be pulled out of the terminal in the coupler.**
- **Avoid touching the glass part of the headlight bulb to keep it free from oil, otherwise the transparency of the glass, the life of the bulb, and the luminous flux will be adversely affected. If the headlight bulb gets soiled, thoroughly clean it with a cloth moistened with alcohol or lacquer thinner.**

2. Check:
   • bulb (for continuity)
   (with the pocket tester)
   No continuity → Replace.

Pocket tester
90890-03112

NOTE:

Before checking for continuity, set the pocket tester to "0" and to the "Ω × 1" range.

▼▼▼▼▼▼▼▼▼▼▼▼▼▼▼▼▼▼▼▼▼▼▼▼▼▼▼▼▼▼▼▼▼▼

a. Connect the positive tester probe to terminal ① and the negative tester probe to terminal ②, and check the continuity.
b. Connect the positive tester probe to terminal ① and the negative tester probe to terminal ③, and check the continuity.
c. If either of the readings indicate no continuity, replace the bulb.

▲▲▲▲▲▲▲▲▲▲▲▲▲▲▲▲▲▲▲▲▲▲▲▲▲▲▲▲▲▲▲▲▲▲

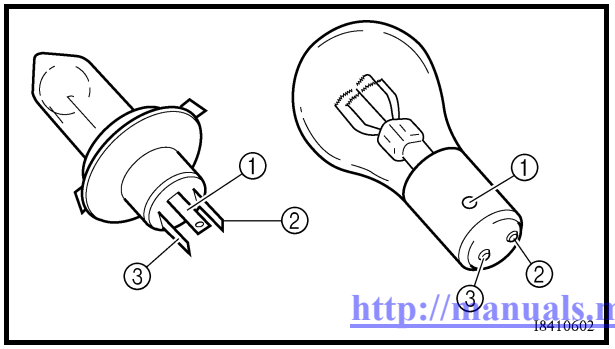

http://manuals.magnamaniac.com

CHECKING THE CONDITION OF THE BULB SOCKETS

The following procedure applies to all of the bulb sockets.

1. Check:
   - bulb socket (for continuity)
     (with the pocket tester)
     No continuity → Replace.

Pocket tester
90890-03112

NOTE:

Check each bulb socket for continuity in the same manner as described in the bulb section; however, note the following.

▼▼▼▼▼▼▼▼▼▼▼▼▼▼▼▼▼▼▼▼▼▼▼▼▼▼▼▼▼▼▼▼

a. Install a good bulb into the bulb socket.
b. Connect the pocket tester probes to the respective leads of the bulb socket.
c. Check the bulb socket for continuity. If any of the readings indicate no continuity, replace the bulb socket.

▲▲▲▲▲▲▲▲▲▲▲▲▲▲▲▲▲▲▲▲▲▲▲▲▲▲▲▲▲▲▲▲

CHECKING THE LEDs

The following procedures applies to all of the LEDs.

1. Check:
   - LED (for proper operation)
     Improper operation → Replace.

▼▼▼▼▼▼▼▼▼▼▼▼▼▼▼▼▼▼▼▼▼▼▼▼▼▼▼▼▼▼▼▼

a. Disconnect the meter assembly coupler (meter assembly end).

http://manuals.magnamaniac.com

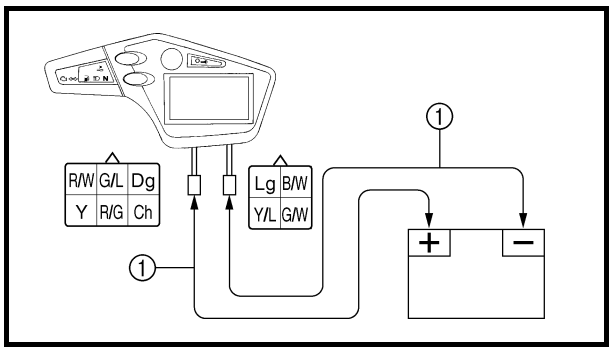

b. Connect two jumper leads ① from the battery terminals to the respective coupler terminal as shown.

Turn signal indicator light (left)	**Positive battery terminal → chocolate Negative battery terminal → black/white**
Turn signal indicator light (right)	**Positive battery terminal → dark green Negative battery terminal → black/white**
High beam indicator light	**Positive battery terminal → red/white or yellow Negative battery terminal →black/white**
Neutral indicator light	**Positive battery terminal → red/white Negative battery terminal → black/white or light green**
Back light	**Positive battery terminal → red/white or red/green Negative battery terminal → black/white**
Coolant temperature warning light Engine trouble warning light Fuel level warning light	**Positive battery terminal → red/white Negative battery terminal → black/white**

Immobilizer system indicator LED
Connect the pocket tester (kΩ × 1) to the meter coupler.

Positive tester probe → black/white Negative tester probe → green/blue	**Continuity**
Positive tester probe → green/blue Negative tester probe → black/white	**No continuity**

http://manuals.magnamaniac.com

⚠ WARNING

- **A wire that is used as a jumper lead must have at least the same capacity of the battery lead, otherwise the jumper lead may burn.**
- **This check is likely to produce sparks, therefore, make sure no flammable gas or fluid is in the vicinity.**

CAUTION:

Do not connect the jumper lead (battery voltage) to the terminals (green/blue and black/white) for the immobilizer system indicator light (LED). The LED could be damaged.

c. When the jumper leads are connected to the terminals, the respective LED should illuminate.
   Does not light → Replace the meter assembly.

▲▲▲▲▲▲▲▲▲▲▲▲▲▲▲▲▲▲▲▲▲▲▲▲▲▲▲▲▲▲▲▲▲▲

http://manuals.magnamaniac.com

EAS00734

IGNITION SYSTEM

CIRCUIT DIAGRAM

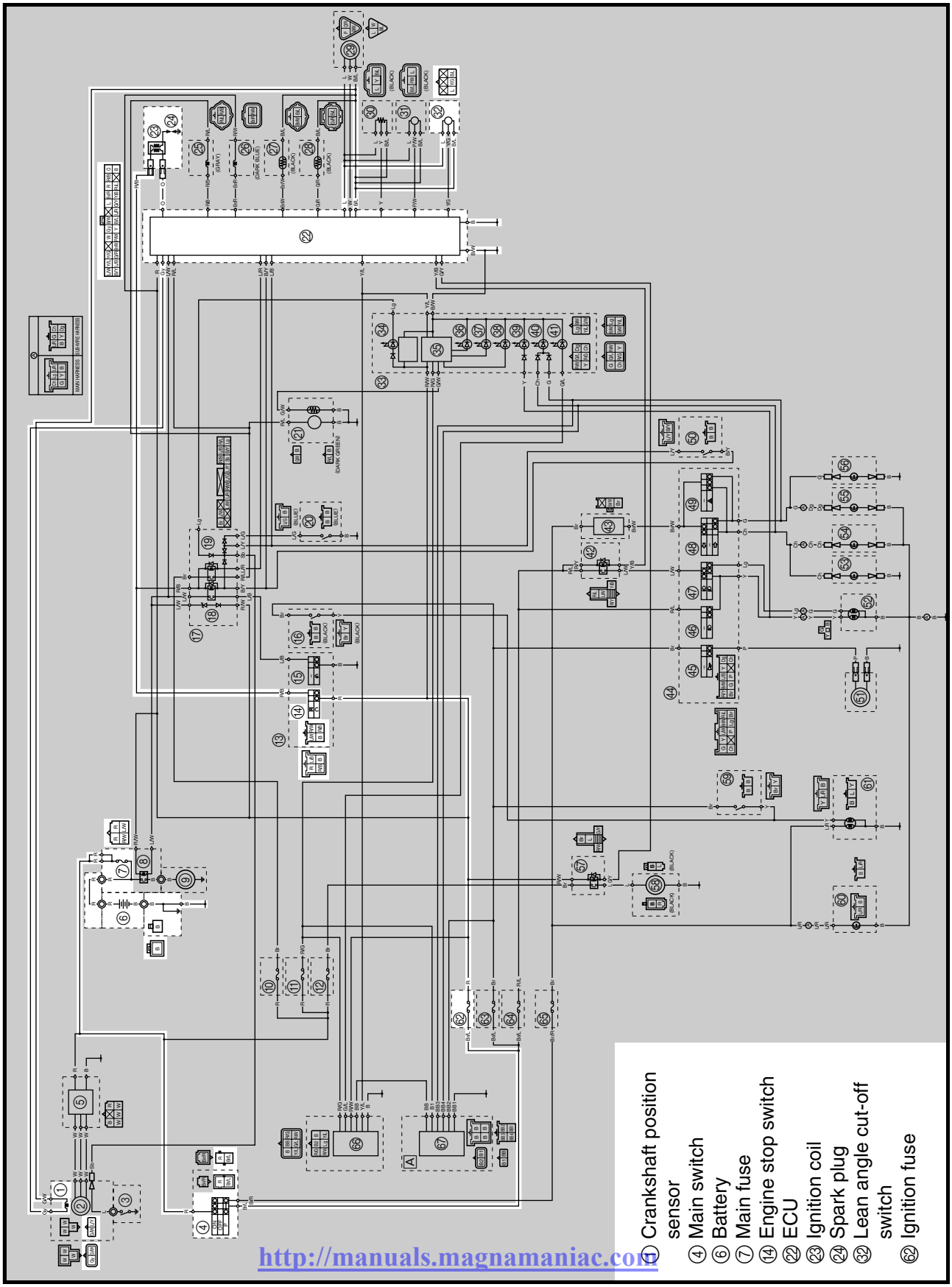

http://manuals.magnamaniac.com

EAS00736
TROUBLESHOOTING

The ignition system fails to operate (no spark or intermittent spark).

Check:
1. main and ignition fuses
2. battery
3. spark plug
4. ignition spark gap
5. spark plug cap resistance
6. ignition coil resistance
7. crankshaft position sensor resistance
8. main switch
9. engine stop switch
10. lean angle cut-off switch
11. wiring connections (of the entire ignition system)

NOTE:
- Before troubleshooting, remove the following part(s):

1. seat
2. battery cover
3. side panels (left and right)
4. fuel tank side covers (left and right)
5. fuel tank

- Troubleshoot with the following special tool(s).

Pocket tester
90890-03112
Ignition checker
90890-06754

EAS00738

1. Main and ignition fuses

- Check the main and ignition fuses for continuity.
  Refer to "CHECKING THE FUSES" in chapter 3.
- Are the main and ignition fuses OK?

YES → NO

Replace the fuse(s).

EAS00739

2. Battery

- Check the condition of the battery.
  Refer to "CHECKING AND CHARGING THE BATTERY" in chapter 3.

Minimum open-circuit voltage
12.8 V or more at 20 °C (68 °F)

- Is the battery OK?

YES → NO

- Clean the battery terminals.
- Recharge or replace the battery.

EAS00740

3. Spark plug

- Check the condition of the spark plug.
- Check the spark plug type.
- Measure the spark plug gap.
  Refer to "CHECKING THE SPARK PLUG" in chapter 3.

Standard spark plug
CR7E (NGK)
Spark plug gap
0.7 ~ 0.8 mm (0.028 ~ 0.031 in)

- Is the spark plug in good condition, is it of the correct type, and is its gap within specification?

YES → NO

Re-gap or replace the spark plug.

http://manuals.magnamaniac.com

EAS00742

4. Ignition spark gap

- Disconnect the spark plug cap ① from the spark plug.
- Connect the ignition checker ② as shown.
- Set the main switch to “ON”.
- Measure the ignition spark gap ⓐ.
- Crank the engine by pushing the start switch and gradually increase the spark gap until a misfire occurs.

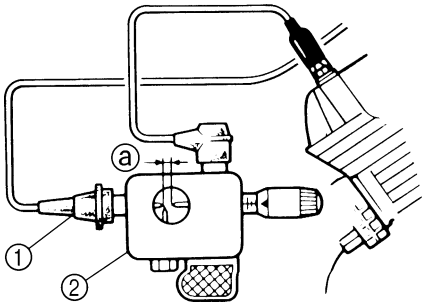

Minimum ignition spark gap
6.0 mm (0.24 in)

- Is there a spark and is the spark gap within specification?

YES

NO

The ignition system is OK.

EAS00744

5. Spark plug cap resistance

- Remove the spark plug cap from the spark plug lead.
- Connect the pocket tester (Ω × 1k) to the spark plug cap as shown.
- Measure the spark plug cap resistance.

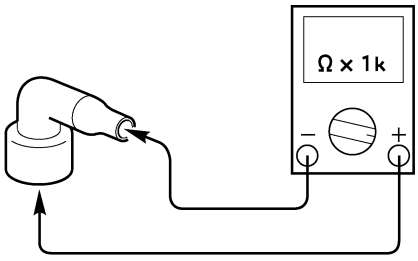

Spark plug cap resistance
10.0 kΩ at 20 °C (68 °F)

- Is the spark plug cap OK?

YES

NO

Replace the spark plug cap.

http://manuals.magnamaniac.com

EAS00746

6. Ignition coil resistance

- Disconnect the ignition coil connectors from the ignition coil terminals.
- Connect the pocket tester (Ω × 1) to the ignition coil as shown.

Positive tester probe → red/black
Negative tester probe → orange

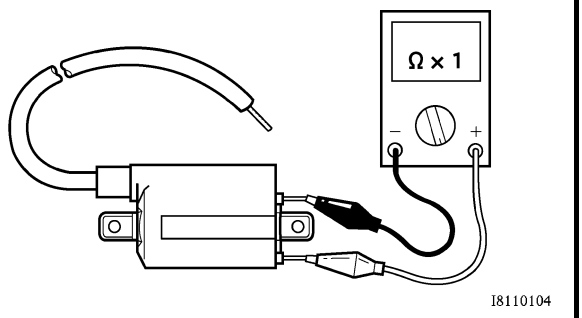

- Measure the primary coil resistance.

Primary coil resistance
3.4 ~ 4.6 Ω at 20 °C (68 °F)

- Connect the pocket tester (Ω × 1k) to the ignition coil as shown.

Negative tester probe → spark plug lead ①
Positive tester probe → red/black ②

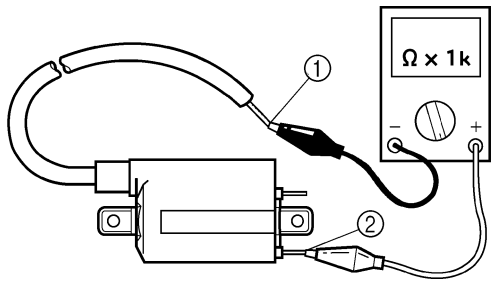

- Measure the secondary coil resistance.

Secondary coil resistance
10.4 ~ 15.6 kΩ at 20 °C (68 °F)

- Is the ignition coil OK?

YES → NO

Replace the ignition coil.

EAS00748

7. Crankshaft position sensor resistance

- Disconnect the crankshaft position sensor coupler from the wire harness.
- Connect the pocket tester (Ω × 100) to the crankshaft position sensor terminal as shown.

Positive tester probe → blue/yellow ①
Negative tester probe → green/white ②

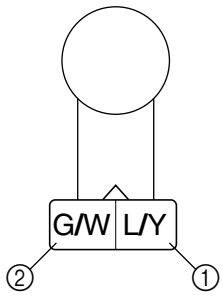

- Measure the crankshaft position sensor resistance.

Crankshaft position sensor resistance
192 ~ 288 Ω at 20 °C (68 °F)
(between blue/yellow and green/white)

- Is the crankshaft position sensor OK?

YES → NO

Replace the crankshaft position sensor.

EAS00749

8. Main switch

- Check the main switch for continuity. Refer to “CHECKING THE SWITCHES”.
- Is the main switch OK?

YES → NO

Replace the main switch/immobilizer unit.

http://manuals.magnamaniac.com

EAS00750

9. Engine stop switch

- Check the engine stop switch for continuity.
  Refer to “CHECKING THE SWITCHES”.
- Is the engine stop switch OK?

YES

NO → Replace the right handlebar switch.

10.Lean angle cut-off switch

- Connect the pocket tester (DC 20 V) to the lean angle cut-off switch terminals as shown.

Positive tester probe → yellow/green ①
Negative tester probe → black/blue ②

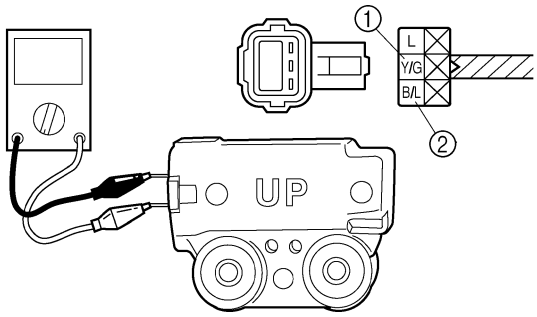

Lean angle cut-off switch voltage
Less than 65° ⓐ → 0.4 ~ 1.4 V
More than 65° ⓑ → 3.7 ~ 4.4 V

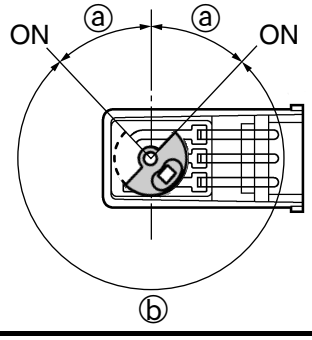

- Is the lean angle cut-off switch OK?

YES

NO → Replace the lean angle cut-off switch.

EAS00754

11.Wiring

- Check the entire ignition system’s wiring.
  Refer to “CIRCUIT DIAGRAM”.
- Is the ignition system’s wiring properly connected and without defects?

YES → Replace the ECU.

NO → Properly connect or repair the ignition system’s wiring.

http://manuals.magnamaniac.com

EAS00755

ELECTRIC STARTING SYSTEM

CIRCUIT DIAGRAM

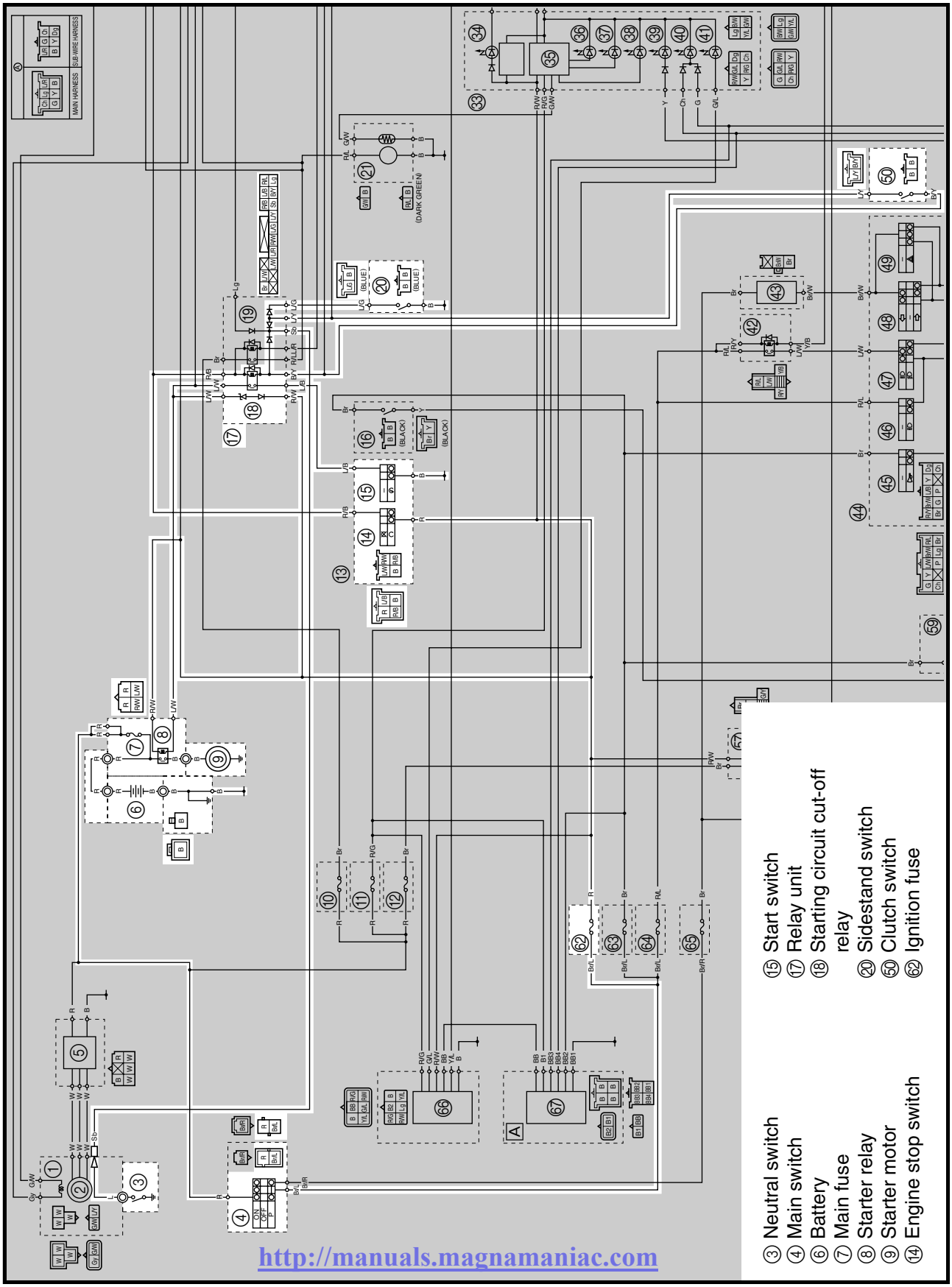

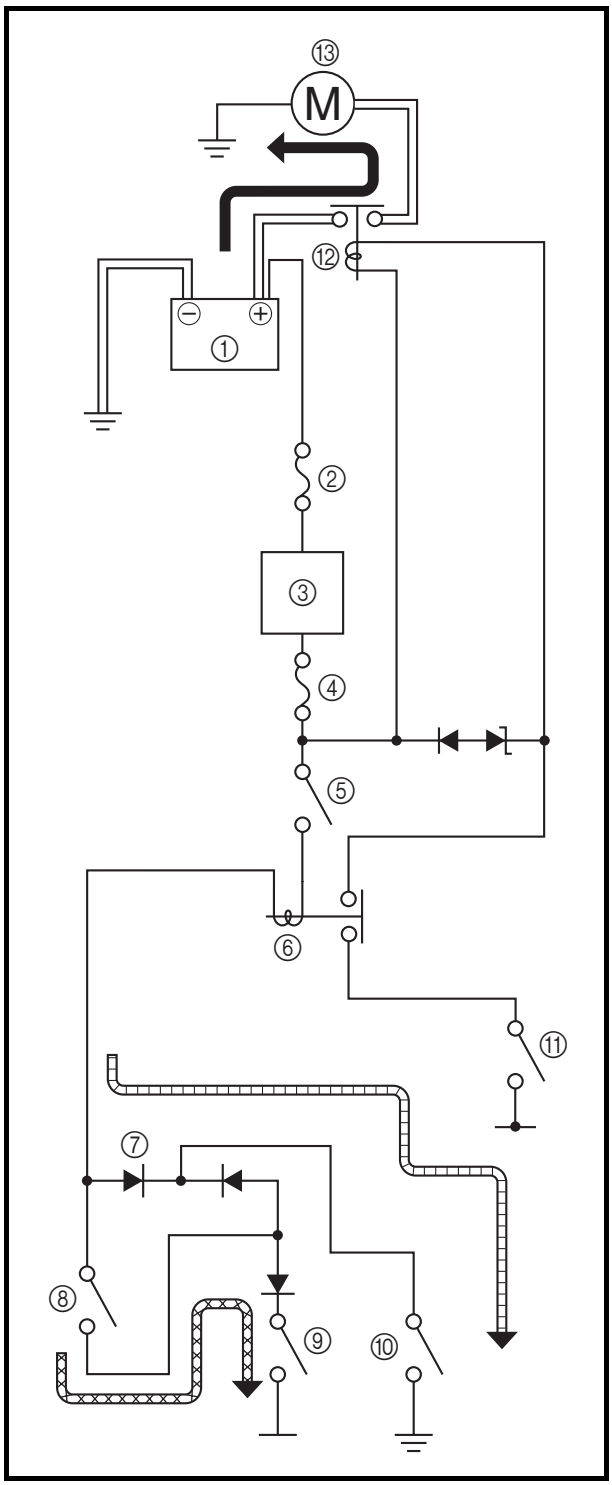

EAS00756

STARTING CIRCUIT CUT-OFF SYSTEM OPERATION

If the engine stop switch is set to "○" and the main switch is set to "ON" (both switches are closed), the starter motor can only operate if at least one of the following conditions is met:

- The transmission is in neutral (the neutral switch is closed).
- The clutch lever is pulled to the handlebar (the clutch switch is closed) and the sidestand is up (the sidestand switch is closed).

The starting circuit cut-off relay prevents the starter motor from operating when neither of these conditions has been met. In this instance, the starting circuit cut-off relay is open so current cannot reach the starter motor. When at least one of the above conditions has been met the starting circuit cut-off relay is closed and the engine can be started by pushing the start switch.

WHEN THE TRANSMISSION IS IN NEUTRAL

WHEN THE SIDESTAND IS UP AND THE CLUTCH LEVER IS PULLED TO THE HANDLEBAR

① Battery
② Main fuse
③ Main switch
④ Ignition fuse
⑤ Engine stop switch
⑥ Relay unit (starting circuit cut-off relay)
⑦ Relay unit (diode)
⑧ Clutch switch
⑨ Sidestand switch
⑩ Neutral switch
⑪ Start switch
⑫ Starter relay
⑬ Starter motor

http://manuals.magnamaniac.com

EAS00757
TROUBLESHOOTING

The starter motor fails to turn.

Check:
1. main and ignition fuses
2. battery
3. starter motor
4. relay unit (starting circuit cut-off relay)
5. relay unit (diode)
6. starter relay
7. main switch
8. engine stop switch
9. neutral switch
10. sidestand switch
11. clutch switch
12. start switch
13. wiring connections
    (of the entire starting system)

NOTE:
- Before troubleshooting, remove the following part(s):

1. seat
2. battery cover
3. side panels (left and right)
4. fuel tank side covers (left and right)
5. fuel tank

- Troubleshoot with the following special tool(s).

Pocket tester
90890-03112

EAS00738

1. Main and ignition fuses

- Check the main and ignition fuses for continuity.
  Refer to "CHECKING THE FUSES" in chapter 3.
- Are the main and ignition fuses OK?

YES

NO → Replace the fuse(s).

EAS00739

2. Battery

- Check the condition of the battery.
  Refer to "CHECKING AND CHARGING THE BATTERY" in chapter 3.

Minimum open-circuit voltage
12.8 V or more at 20 °C (68 °F)

- Is the battery OK?

YES

NO →
- Clean the battery terminals.
- Recharge or replace the battery.

EAS00758

3. Starter motor

- Connect the positive battery terminal ① and starter motor lead ② with a jumper lead ③.

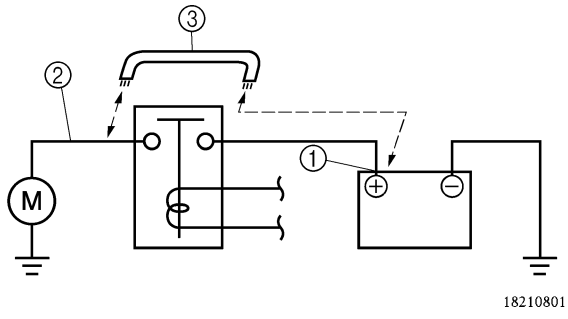

⚠ WARNING
- **A wire that is used as a jumper lead must have at least the same capacity or more as that of the battery lead, otherwise the jumper lead may burn.**
- **This check is likely to produce sparks, therefore make sure nothing flammable is in the vicinity.**

- Does the starter motor turn?

YES

NO → Repair or replace the starter motor.

http://manuals.magnamaniac.com

EAS00759

4. Relay unit (starting circuit cut-off relay)

- Disconnect the relay unit from the wire harness.
- Connect the pocket tester (Ω × 1) and battery (12 V) to the relay unit terminals as shown.

Positive battery terminal → red/black ①
Negative battery terminal → black/yellow ②

Positive tester probe → blue/white ③
Negative tester probe → blue/black ④

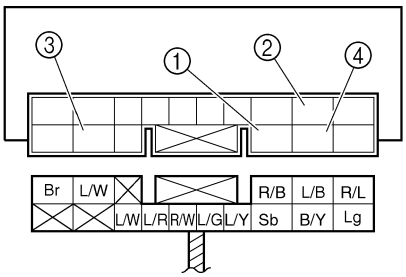

- Does the starting circuit cut-off relay have continuity between blue/white and blue/black?

YES

NO

Replace the relay unit.

EAS00760

5. Relay unit (diode)

- Disconnect the relay unit from the wire harness.
- Connect the pocket tester (Ω × 1) to the relay unit terminals as shown.
- Measure the diode for continuity as follows.

Positive tester probe → sky blue ① **Negative tester probe → black/yellow ②**	**Continuity**
Positive tester probe → sky blue ① **Negative tester probe → blue/yellow ③**	
Positive tester probe → blue/green ④ **Negative tester probe → blue/yellow ③**	
Positive tester probe → black/yellow ② **Negative tester probe → sky blue ①**	**No continuity**
Positive tester probe → blue/yellow ③ **Negative tester probe → sky blue ①**	
Positive tester probe → blue/yellow ③ **Negative tester probe → blue/green ④**	

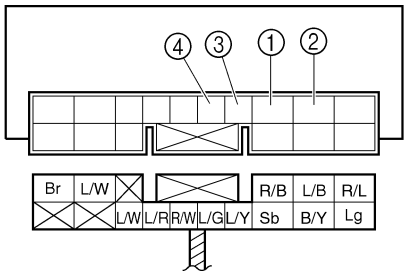

NOTE:
When you switch the tester's positive and negative probes, the readings in the above chart will be reversed.

- Are the testing readings correct?

YES

NO

Replace the relay unit.

http://manuals.magnamaniac.com

EAS00761

6. Starter relay

- Disconnect the starter relay coupler from the coupler.
- Connect the pocket tester ($\Omega \times 1$) and battery (12 V) to the starter relay coupler as shown.

Positive battery terminal → red/white ①
Negative battery terminal → blue/white ②

Positive tester probe → red ③
Negative tester probe → black ④

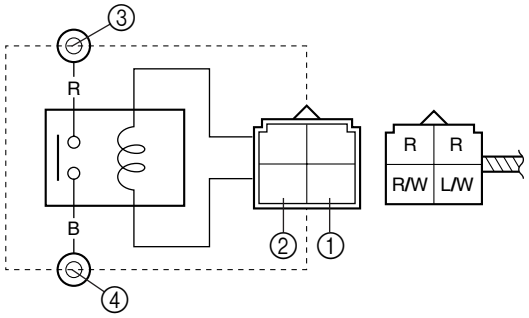

- Does the starter relay have continuity between red and black?

YES ⇩ NO ⇩

Replace the starter relay.

EAS00749

7. Main switch

- Check the main switch for continuity.
  Refer to “CHECKING THE SWITCHES”.
- Is the main switch OK?

YES ⇩ NO ⇩

Replace the main switch/immobilizer unit.

EAS00750

8. Engine stop switch

- Check the engine stop switch for continuity.
  Refer to “CHECKING THE SWITCHES”.
- Is the engine stop switch OK?

YES ⇩ NO ⇩

Replace the right handlebar switch.

EAS00751

9. Neutral switch

- Check the neutral switch for continuity.
  Refer to “CHECKING THE SWITCHES”.
- Is the neutral switch OK?

YES ⇩ NO ⇩

Replace the neutral switch.

EAS00752

10. Sidestand switch

- Check the sidestand switch for continuity.
  Refer to “CHECKING THE SWITCHES”.
- Is the sidestand switch OK?

YES ⇩ NO ⇩

Replace the sidestand switch.

EAS00763

11. Clutch switch

- Check the clutch switch for continuity.
  Refer to “CHECKING THE SWITCHES”.
- Is the clutch switch OK?

YES ⇩ NO ⇩

Replace the clutch switch.

http://manuals.magnamaniac.com

EAS00764

12.Start switch

- Check the start switch for continuity. Refer to “CHECKING THE SWITCHES”.
- Is the start switch OK?

YES → NO

Replace the right handlebar switch.

EAS00766

13. Wiring

- Check the entire starting system’s wiring. Refer to “CIRCUIT DIAGRAM”.
- Is the starting system’s wiring properly connected and without defects?

YES → The starting system circuit is OK.

NO → Replace the relay unit and properly connect or repair the starting system’s wiring.

http://manuals.magnamaniac.com

EAS00767
STARTER MOTOR

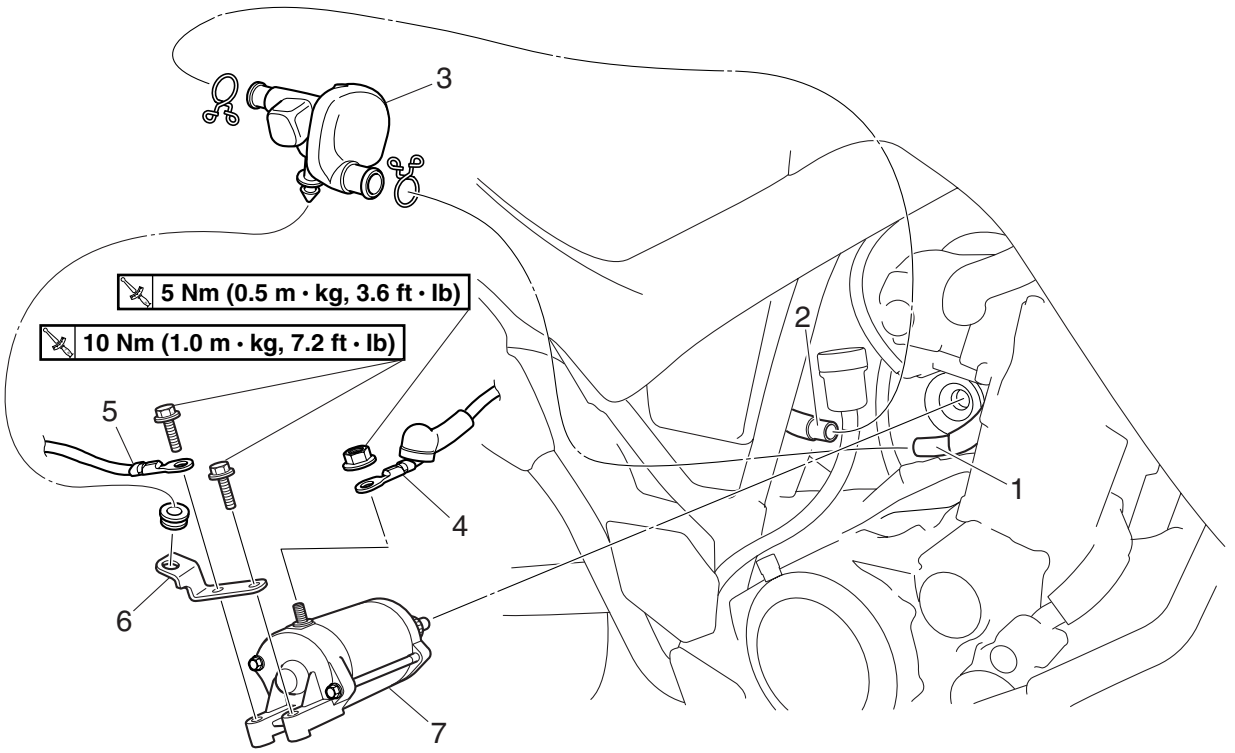

Order	Job/Part	Q'ty	Remarks
	Removing the starter motor		Remove the parts in the order listed.
1	Crankcase-to-crankcase-breather-chamber hose	1	Disconnect.
2	Air-filter-to-crankcase-breather-chamber hose	1	Disconnect.
3	Crankcase breather chamber	1	
4	Starter motor lead	1	Disconnect.
5	Negative battery lead	1	Disconnect.
6	Crankcase breather chamber bracket	1	
7	Starter motor	1	
			For installation, reverse the removal procedure.

http://manuals.magnamaniac.com

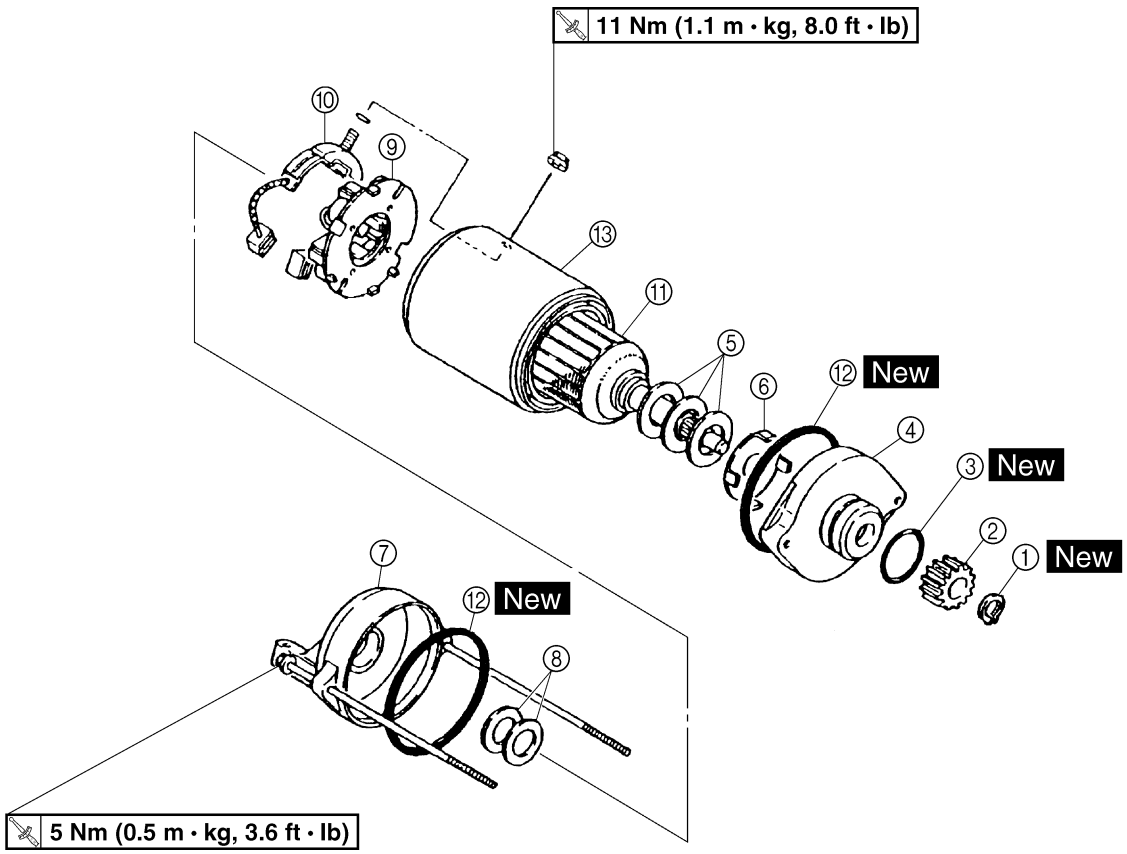

Order	Job/Part	Q'ty	Remarks
	Disassembling the starter motor		Remove the parts in the order listed.
①	Circlip	1	
②	Starter motor gear	1	
③	O-ring	1	
④	Front bracket	1	
⑤	Shims		
⑥	Lock washer	1	
⑦	Rear bracket	1	
⑧	Shims		
⑨	Brush holder assembly	1	
⑩	Brush	1	
⑪	Armature coil	1	
⑫	O-ring	2	
⑬	Starter motor yoke	1	
			For assembly, reverse the disassembly procedure.

http://manuals.magnamaniac.com

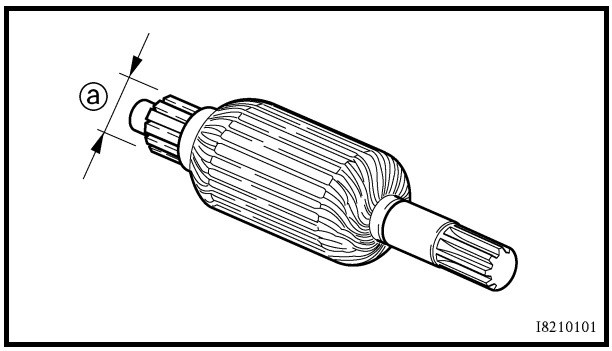

EAS00770
CHECKING THE STARTER MOTOR

1. Check:
   - commutator
     Dirt → Clean with 600 grit sandpaper.
2. Measure:
   - commutator diameter ⓐ
     Out of specification → Replace the starter motor.

Commutator wear limit
27 mm (1.06 in)

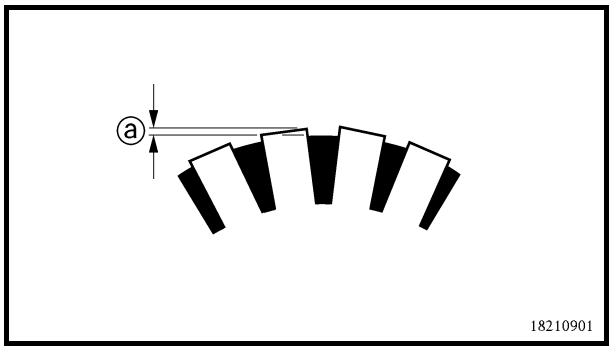

3. Measure:
   - mica undercut ⓐ
     Out of specification → Scrape the mica to the proper measurement with a hacksaw blade that has been grounded to fit the commutator.

Mica undercut
0.70 mm (0.028 in)

NOTE:
The mica of the commutator must be undercut to ensure proper operation of the commutator.

4. Measure:
   - armature assembly resistances (commutator and insulation)
     Out of specification → Replace the starter motor.

▼▼▼▼▼▼▼▼▼▼▼▼▼▼▼▼▼▼▼▼▼▼▼▼▼▼▼▼▼▼▼▼▼▼

a. Measure the armature assembly resistances with the pocket tester.

http://manuals.magnamaniac.com

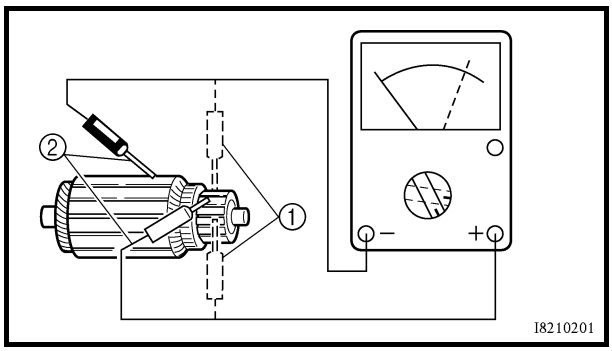

Pocket tester
90890-03112

Armature coil
Commutator resistance ①
0.025 ~ 0.035 Ω at 20 °C (68 °F)
Insulation resistance ②
Above 1 MΩ at 20 °C (68 °F)

b. If any resistance is out of specification, replace the starter motor.

▲▲▲▲▲▲▲▲▲▲▲▲▲▲▲▲▲▲▲▲▲▲▲▲▲▲▲▲▲▲▲▲

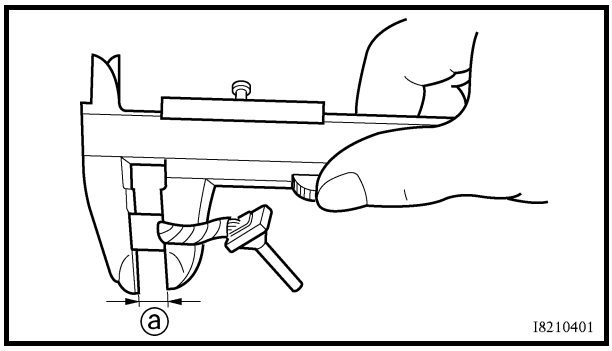

5. Measure:
   • brush length ⓐ.
   Out of specification → Replace the brushes as a set.

Brush length wear limit
5.00 mm (0.20 in)

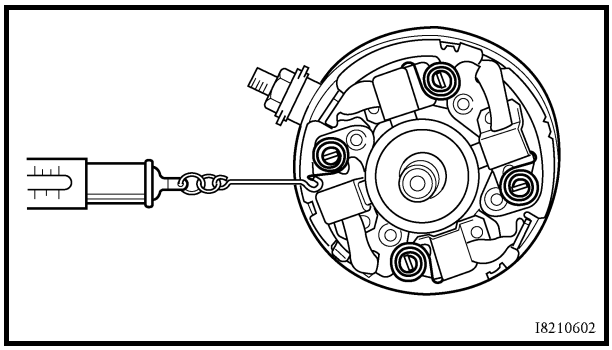

6. Measure:
   • brush spring force
   Out of specification → Replace the brush springs as a set.

Brush spring force
7.65 ~ 10.01 N
(780 ~ 1,021 gf, 27.51 ~ 36.01 oz)

7. Check:
   • gear teeth
   Damage/wear → Replace the gear.
8. Check:
   • bearing
   • oil seal
   Damage/wear → Replace the defective part(s).

http://manuals.magnamaniac.com

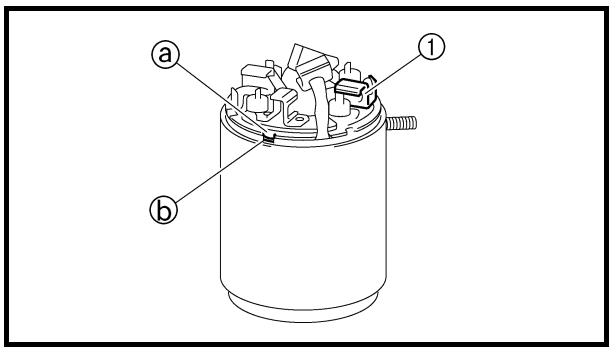

EAS00772
ASSEMBLING THE STARTER MOTOR

1. Install:
   - brush seat ①

NOTE:
Align the tab ⓐ on the brush seat with the slot ⓑ in the starter motor yoke.

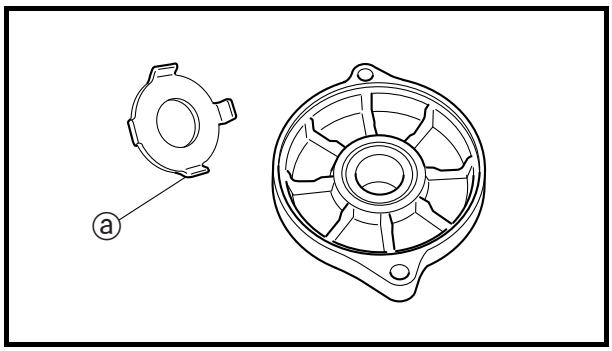

2. Install:
   - lock washer

NOTE:
Align the tabs ⓐ on the lock washer with the groves in the front bracket.

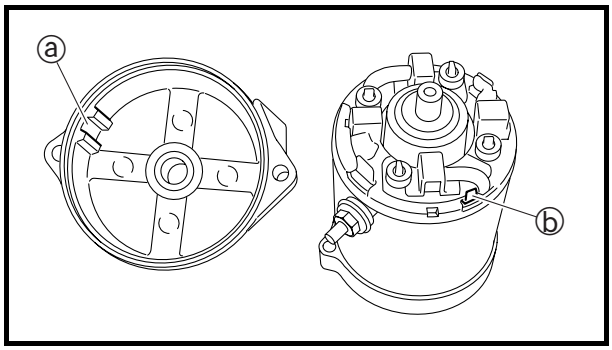

3. Install:
   - rear bracket

NOTE:
Align the slot ⓐ in the rear bracket with the tab ⓑ on the brush seat.

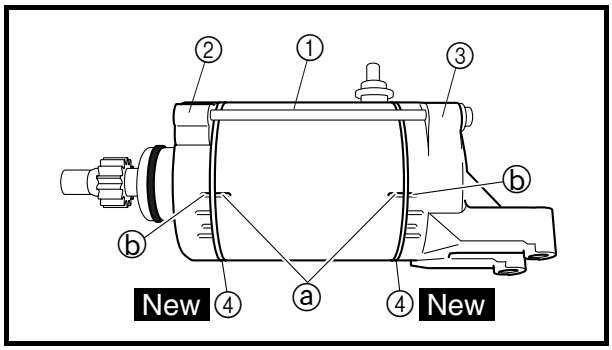

4. Install:
   - starter motor yoke ①
   - front bracket ②
   - rear bracket ③
   - O-rings ④ New
   - bolts 5 Nm (0.5 m · kg, 3.6 ft · lb)

NOTE:
Align the alignment marks ⓐ on the starter motor yoke with the alignment marks ⓑ on the front and rear brackets.

5. Install:
   - starter motor gear
   - circlip

http://manuals.magnamaniac.com

EAS00773

CHARGING SYSTEM

CIRCUIT DIAGRAM

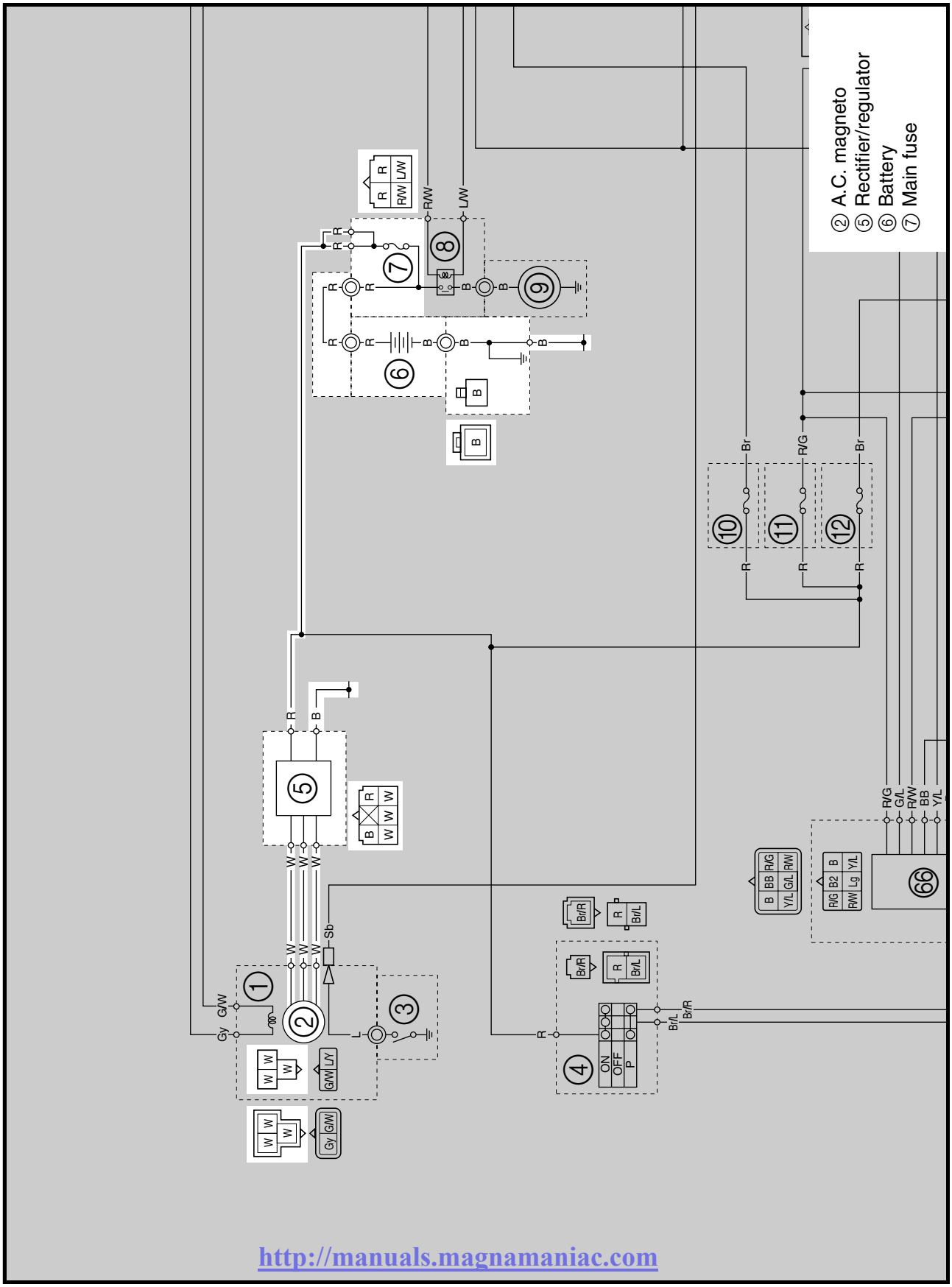

http://manuals.magnamaniac.com

EAS00774
TROUBLESHOOTING

The battery is not being charged.

Check:
1. main fuse
2. battery
3. charging voltage
4. stator coil resistance
5. wiring connections
   (of the entire charging system)

NOTE:
- Before troubleshooting, remove the following part(s):

1. seat
2. battery cover
3. left side panel

- Troubleshoot with the following special tool(s).

Pocket tester
90890-03112

EAS00738

1. Main fuse

- Check the main fuse for continuity.
  Refer to “CHECKING THE FUSES” in chapter 3.
- Are the main fuse OK?

YES

NO → Replace the fuse.

EAS00739

2. Battery

- Check the condition of the battery.
  Refer to “CHECKING AND CHARGING THE BATTERY” in chapter 3.

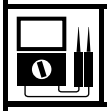

Minimum open-circuit voltage
12.8 V or more at 20 °C (68 °F)

- Is the battery OK?

YES

NO →
- Clean the battery terminals.
- Recharge or replace the battery.

http://manuals.magnamaniac.com

EAS00775

3. Charging voltage

- Connect the pocket tester (DC 20 V) to the battery as shown.

Positive tester probe →
positive battery terminal
Negative tester probe →
negative battery terminal

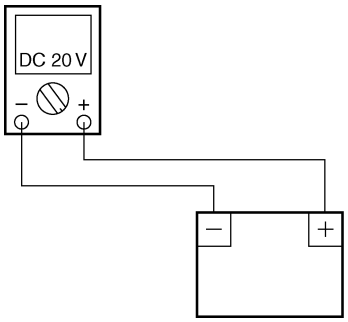

- Start the engine and let it run at approximately 5,000 r/min.
- Measure the charging voltage.

Charging voltage
14.0 V at 5,000 r/min

NOTE:
Make sure the battery is fully charged.

- Is the charging voltage within specification?

NO

The charging circuit is OK.

YES

EAS00776

4. Stator coil resistance

- Disconnect the A.C. magneto coupler from the wire harness.
- Connect the pocket tester (Ω × 1) to the charging coils as shown.

Positive tester probe → white ①
Negative tester probe → white ②

Positive tester probe → white ①
Negative tester probe → white ③

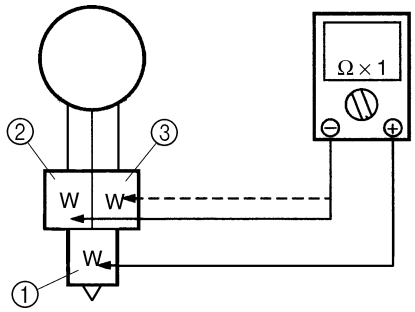

- Measure the stator coil resistances.

Stator coil resistance
0.224 ~ 0.336 Ω at 20 °C (68 °F)
(between white and white)

- Is the stator coil OK?

YES

NO

Replace the crankshaft position sensor/ stator assembly.

EAS00779

5. Wiring

- Check the wiring connections of the entire charging system.
  Refer to “CIRCUIT DIAGRAM”.
- Is the charging system’s wiring properly connected and without defects?

YES

Replace the rectifier/ regulator.

NO

Properly connect or repair the charging system’s wiring.

http://manuals.magnamaniac.com

EAS00780
LIGHTING SYSTEM
CIRCUIT DIAGRAM

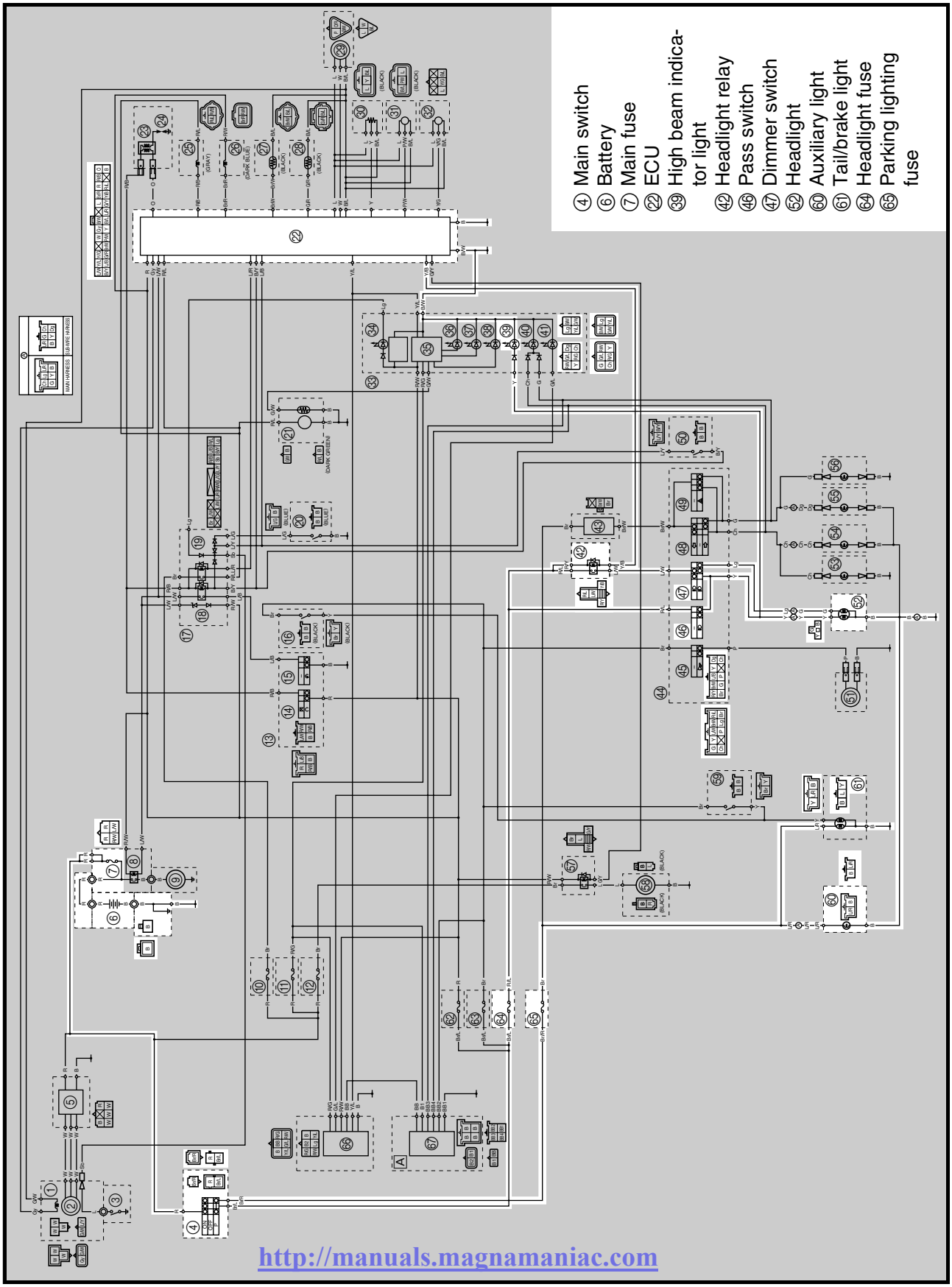

http://manuals.magnamaniac.com

EAS00781
TROUBLESHOOTING

Any of the following fail to come on: headlight, high beam indicator light, tail/brake light, on auxiliary light.

Check:
1. main, headlight, and parking lighting fuses
2. battery
3. main switch
4. dimmer switch
5. pass switch
6. headlight relay
7. wiring connections
   (of the entire lighting system)

NOTE:
- Before troubleshooting, remove the following part(s):

1. seat
2. battery cover
3. side panels (left and right)
4. fuel tank side covers (left and right)
5. fuel tank
6. headlight assembly

- Troubleshoot with the following special tool(s).

Pocket tester
90890-03112

EAS00738

1. Main, headlight, and parking lighting fuses

- Check the main, headlight, and parking lighting fuses for continuity.
  Refer to “CHECKING THE FUSES” in chapter 3.
- Are the main, headlight, and parking lighting fuses OK?

YES ↓ NO ↓

Replace the fuse(s).

EAS00739

2. Battery

- Check the condition of the battery.
  Refer to “CHECKING AND CHARGING THE BATTERY” in chapter 3.

Minimum open-circuit voltage
12.8 V or more at 20 °C (68 °F)

- Is the battery OK?

YES ↓ NO ↓

- Clean the battery terminals.
- Recharge or replace the battery.

EAS00749

3. Main switch

- Check the main switch for continuity.
  Refer to “CHECKING THE SWITCHES”.
- Is the main switch OK?

YES ↓ NO ↓

Replace the main switch/immobilizer unit.

http://manuals.magnamaniac.com

EAS00784

4. Dimmer switch

- Check the dimmer switch for continuity. Refer to “CHECKING THE SWITCHES”.
- Is the dimmer switch OK?

YES

NO

The dimmer switch is faulty. Replace the left handlebar switch.

EAS00786

5. Pass switch

- Check the pass switch for continuity. Refer to “CHECKING THE SWITCHES”.
- Is the pass switch OK?

YES

NO

The pass switch is faulty. Replace the left handlebar switch.

6. Headlight relay

- Disconnect the headlight relay from the wire harness.
- Connect the pocket tester (Ω × 1) and battery (12 V) to the headlight relay terminal as shown.
- Check the headlight relay for continuity.

Battery positive terminal → red/yellow ①
Battery negative terminal → yellow/black ②

Positive tester probe → red/blue ③
Negative tester probe → blue/white ④

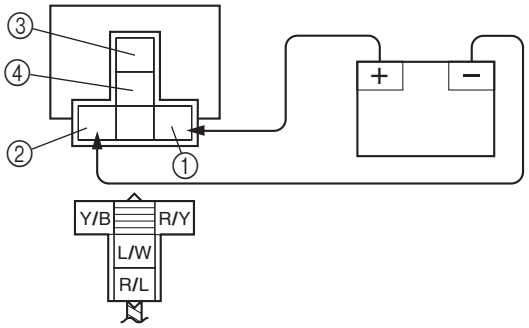

- Does the headlight relay have continuity between red/blue and blue/white?

YES

NO

Replace the headlight relay.

EAS00787

7. Wiring

- Check the entire lighting system’s wiring. Refer to “CIRCUIT DIAGRAM”.
- Is the lighting system’s wiring properly connected and without defects?

YES

NO

Check the condition of each of the lighting system’s circuits. Refer to “CHECKING THE LIGHTING SYSTEM”.

Properly connect or repair the lighting system’s wiring.

http://manuals.magnamaniac.com

EAS00788
CHECKING THE LIGHTING SYSTEM

1. The headlight and the high beam indicator light fail to come on.

1. Headlight bulb and socket

- Check the headlight bulb and socket for continuity.
  Refer to "CHECKING THE BULBS AND BULB SOCKETS".
- Are the headlight bulb and socket OK?

YES

NO → Replace the headlight bulb, socket or both.

2. High beam indicator light LED

- Check the LED of the high beam indicator light.
  Refer to "CHECKING THE BULBS AND BULB SOCKETS".
- Is the high beam indicator light LED OK?

YES

NO → Replace the meter assembly.

3. Voltage

- Connect the pocket tester (DC 20 V) to the headlight and meter assembly couplers as shown.

A When the dimmer switch is set to "≣D"
B When the dimmer switch is set to "≣D"

Headlight coupler (wire harness end)

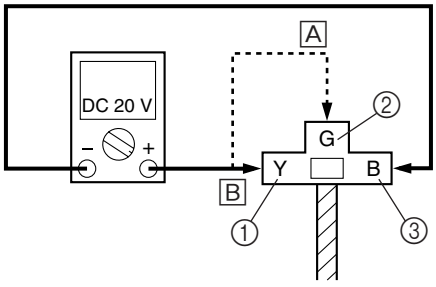

Headlight
Positive tester probe → yellow ① or green ②
Negative tester probe → black ③

High beam indicator light
Positive tester probe → yellow ④
Negative tester probe → black/white ⑤

Meter assembly couplers (wire harness end)

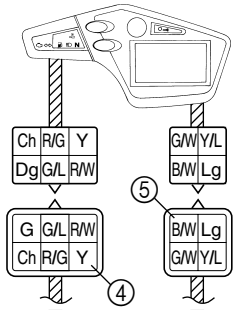

- Set the main switch to "ON".
- Start the engine.
- Set the dimmer switch to "≣D" or "≣D".
- Measure the voltage (DC 12 V) of yellow ① or green ② at the headlight coupler (wire harness end) and yellow ④ at the meter assembly coupler (wire harness end).
- Is the voltage within specification?

YES → This circuit is OK.

NO → The wiring circuit from the main switch to the headlight coupler or meter assembly couplers is faulty and must be repaired.

http://manuals.magnamaniac.com

EAS00790
2. The tail/brake light fails to come on.

1. Tail/brake light bulb and socket
- Check the tail/brake light bulb and socket for continuity.
  Refer to "CHECKING THE BULBS AND BULB SOCKETS".
- Are the tail/brake light bulb and socket OK?

YES / NO

Replace the tail/brake light bulb, socket or both.

2. Voltage
- Connect the pocket tester (DC 20 V) to the tail/brake light coupler (wire harness end) as shown.

Positive tester probe → blue/red ①
Negative tester probe → black ②

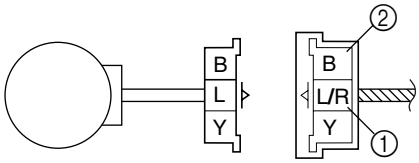

- Set the main switch to "ON".
- Measure the voltage (DC 12 V) of blue/red ① at the tail/brake light coupler (wire harness end).
- Is the voltage within specification?

YES / NO

This circuit is OK.

The wiring circuit from the main switch to the tail/brake light coupler is faulty and must be repaired.

EAS00791
3. The auxiliary light fails to come on.

1. Auxiliary light bulb and socket
- Check the auxiliary light bulb and socket for continuity.
  Refer to "CHECKING THE BULBS AND BULB SOCKETS".
- Are the auxiliary light bulb and socket OK?

YES / NO

Replace the auxiliary light bulb, socket or both.

2. Voltage
- Connect the pocket tester (DC 20 V) to the auxiliary light coupler (wire harness end) as shown.

Positive tester probe → blue/red ①
Negative tester probe → black ②

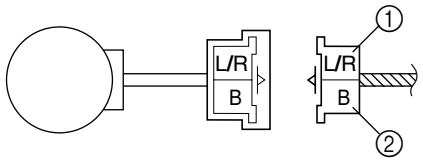

- Set the main switch to "ON".
- Measure the voltage (DC 12 V) of blue/red ① at the auxiliary light connectors (wire harness end).
- Is the voltage within specification?

YES / NO

This circuit is OK.

The wiring circuit from the main switch to the auxiliary light coupler is faulty and must be repaired.

http://manuals.magnamaniac.com

http://manuals.magnamaniac.com

EAS00793

SIGNALING SYSTEM

CIRCUIT DIAGRAM

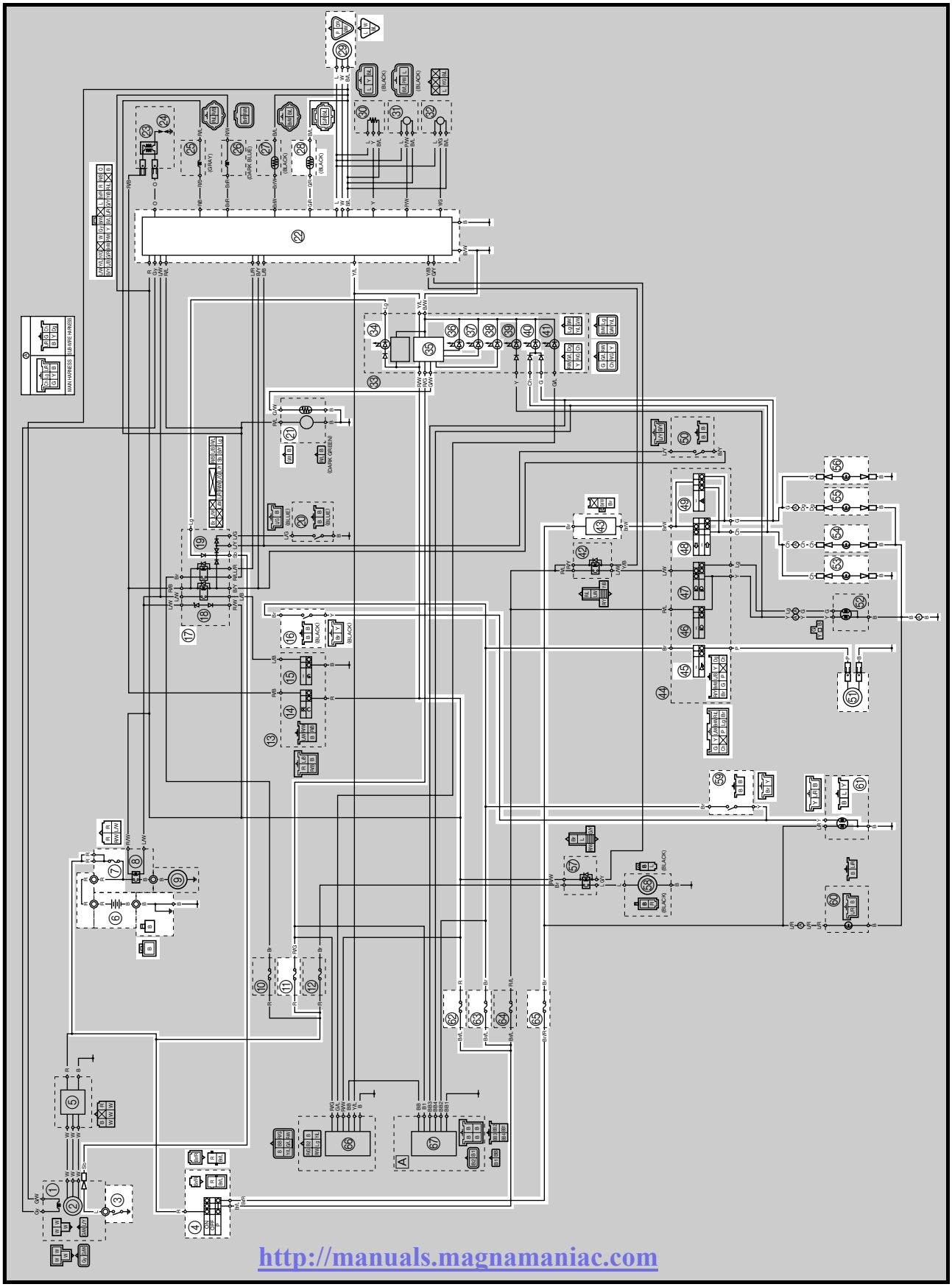

http://manuals.magnamaniac.com

③ Neutral switch
④ Main switch
⑥ Battery
⑦ Main fuse
⑪ Backup fuse (immobilizer unit, meter assembly)
⑯ Front brake light switch
⑰ Relay unit
㉑ Fuel pump
㉒ ECU
㉘ Coolant temperature sensor
㉙ Speed sensor
㉞ Neutral indicator light
㉟ Multifunction meter
㊱ Coolant temperature warning light
㊲ Engine trouble warning light
㊳ Fuel level warning light
㊵ Turn signal indicator light
㊸ Turn signal/hazard relay
㊺ Horn switch
㊽ Turn signal switch
㊾ Hazard switch
㊶ Horn
㊸ Rear turn signal light (left)
㊹ Front turn signal light (left)
㊺ Front turn signal light (right)
㊻ Rear turn signal light (right)
㊾ Rear brake light switch
㊶ Tail/brake light
㊷ Ignition fuse
㊸ Signaling system fuse
㊺ Parking lighting fuse

http://manuals.magnamaniac.com

EAS00794
TROUBLESHOOTING

- **Any of the following fail to come on: a turn signal light, an indicator light, a warning light, or the tail/brake light**
- **The horn fails to sound.**

Check:
1. main, ignition, signaling system, parking lighting, and backup fuses
2. battery
3. main switch
4. wiring connections (of the entire signaling system)

NOTE:
- Before troubleshooting, remove the following part(s):

1. seat
2. battery cover
3. side panels (left and right)
4. fuel tank side covers (left and right)
5. fuel tank
6. rear cover (left and right)
7. headlight assembly

- Troubleshoot with the following special tool(s).

Pocket tester
90890-03112

EAS00738

1. Main, ignition, signaling system, parking lighting, and backup fuses

- Check the main, ignition, signaling system, parking lighting, and backup fuses for continuity.
  Refer to "CHECKING THE FUSES" in chapter 3.
- Are the main, ignition, signaling system, parking lighting, and backup fuses OK?

YES

NO → Replace the fuse(s).

EAS00739

2. Battery

- Check the condition of the battery.
  Refer to "CHECKING AND CHARGING THE BATTERY" in chapter 3.

Minimum open-circuit voltage
12.8 V or more at 20 °C (68 °F)

- Is the battery OK?

YES

NO →
- Clean the battery terminals.
- Recharge or replace the battery.

EAS00749

3. Main switch

- Check the main switch for continuity.
  Refer to "CHECKING THE SWITCHES".
- Is the main switch OK?

YES

NO → Replace the main switch/immobilizer unit.

EAS00795

4. Wiring

- Check the entire signal system's wiring.
  Refer to "CIRCUIT DIAGRAM".
- Is the signaling system's wiring properly connected and without defects?

YES → Check the condition of each of the signaling system's circuits.
Refer to "CHECKING THE SIGNALING SYSTEM".

NO → Properly connect or repair the signaling system's wiring.

http://manuals.magnamaniac.com

EAS00796
CHECKING THE SIGNALING SYSTEM

1. The horn fails to sound.

1. Horn switch
- Check the horn switch for continuity. Refer to “CHECKING THE SWITCHES”.
- Is the horn switch OK?

YES ⇩ NO ⇩

Replace the left handlebar switch.

2. Voltage
- Connect the pocket tester (DC 20 V) to the horn connector at the horn terminal as shown.

Positive tester probe → pink ①
Negative tester probe → ground

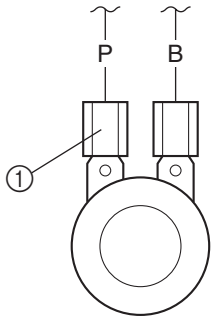

- Set the main switch to “ON”.
- Push the horn switch.
- Measure the voltage (DC 12 V) of pink at the horn terminal.
- Is the voltage within specification?

YES ⇩ NO ⇩

The wiring circuit from the main switch to the horn connector is faulty and must be repaired.

3. Horn
- Disconnect the black connector at the horn terminal.
- Connect a jumper lead ① to the horn terminal and ground the jumper lead.
- Set the main switch to “ON”.
- Push the horn switch.
- Does the horn sound?

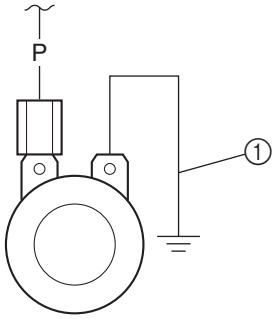

YES ⇩ NO ⇩

The horn is OK.

Replace the horn.

http://manuals.magnamaniac.com

EAS00797
2. The tail/brake light fails to come on.

1. Tail/brake light bulb and socket
- Check the tail/brake light bulb and socket for continuity.
  Refer to “CHECKING THE BULBS AND BULB SOCKETS”.
- Are the tail/brake light bulb and socket OK?

YES → NO

Replace the tail/brake light bulb, socket or both.

2. Brake light switches
- Check the brake light switches for continuity.
  Refer to “CHECKING THE SWITCHES”.
- Is the brake light switch OK?

YES → NO

Replace the brake light switch.

3. Voltage
- Connect the pocket tester (DC 20 V) to the tail/brake light coupler (wire harness end) as shown.

Positive tester probe → yellow ①
Negative tester probe → black ②

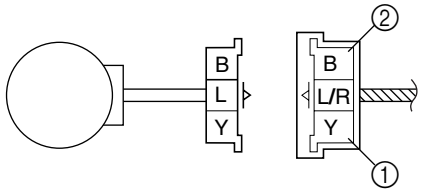

- Set the main switch to “ON”.
- Pull in the brake lever or push down on the brake pedal.
- Measure the voltage (DC 12 V) of yellow ① at the tail/brake light coupler (wire harness end).
- Is the voltage within specification?

YES → This circuit is OK.

NO → The wiring circuit from the main switch to the tail/brake light coupler is faulty and must be repaired.

http://manuals.magnamaniac.com

EAS00799
3. The turn signal light, turn signal indicator light or both fail to blink.

1. Turn signal indicator light bulb and socket
- Check the turn signal light bulb and socket for continuity.
  Refer to “CHECKING THE BULBS AND BULB SOCKETS”.
- Are the turn signal light bulb and socket OK?

YES → NO: Replace the turn signal light bulb, socket or both.

2. Turn signal indicator light LED
- Check the LED of the turn signal indicator light.
  Refer to “CHECKING THE BULBS AND BULB SOCKETS”.
- Is the turn signal indicator light LED OK?

YES → NO: Replace the meter assembly.

3. Turn signal switch
- Check the turn signal switch for continuity.
  Refer to “CHECKING THE SWITCHES”.
- Is the turn signal switch OK?

YES → NO: Replace the left handlebar switch.

4. Hazard switch
- Check the hazard switch for continuity.
  Refer to “CHECKING THE SWITCHES”.
- Is the hazard switch OK?

YES → NO: Replace the left handlebar switch.

5. Voltage
- Connect the pocket tester (DC 20 V) to the turn signal/hazard relay coupler (wire harness end) as shown.

Positive tester probe → brown ①
Negative tester probe → ground

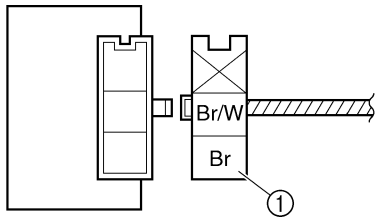

- Set the main switch to “ON”.
- Measure the voltage (DC 12 V) of brown ① at the turn signal/hazard relay coupler (wire harness end).
- Is the voltage within specification?

YES → NO: The wiring circuit from the main switch to the turn signal/hazard relay coupler is faulty and must be repaired.

http://manuals.magnamaniac.com

6. Voltage

- Connect the pocket tester (DC 20 V) to the turn signal/hazard relay coupler (wire harness end) as shown.

Positive tester probe → brown/white ①
Negative tester probe → ground

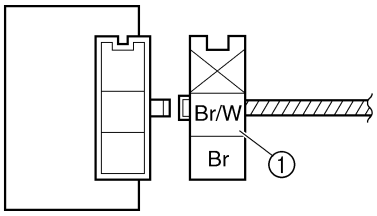

- Set the main switch to "ON".
- Set the turn signal switch to "⇦" or "⇨".
- Measure the voltage (DC 12 V) of brown/white ① at the turn signal/hazard relay coupler (wire harness end).
- Is the voltage within specification?

YES

NO

The turn signal/hazard relay is faulty and must be replaced.

7. Voltage

- Connect the pocket tester (DC 20 V) to the turn signal light connector or meter assembly coupler (wire harness end) as shown.

A Front turn signal light
B Rear turn signal light
C Turn signal indicator light

Left turn signal light
Positive tester probe → chocolate ①
Negative tester probe → ground

Right turn signal light
Positive tester probe →
dark green ② or green ③
Negative tester probe → ground

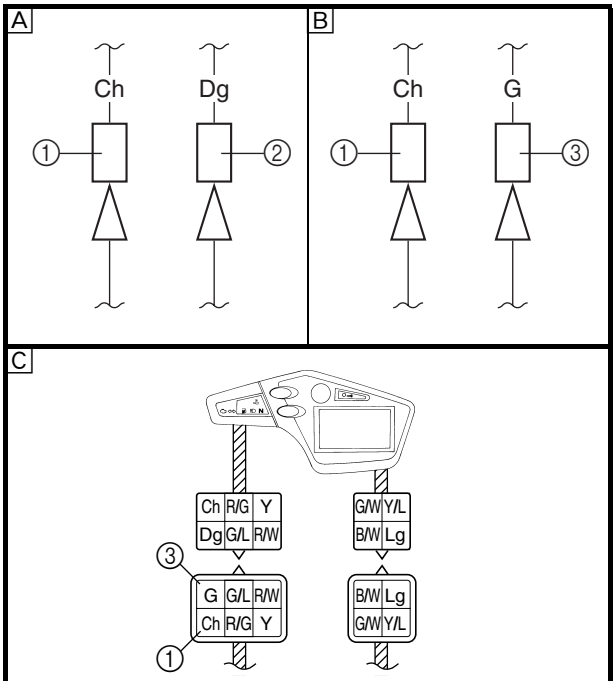

- Set the main switch to "ON".
- Set the turn signal switch to "⇦" or "⇨".
- Measure the voltage (DC 12 V) of chocolate ① and dark green ② or green ③ at the turn signal light connectors or meter assembly coupler (wire harness end).
- Is the voltage within specification?

YES

NO

This circuit is OK.

The wiring circuit from the turn signal switch to the turn signal light connectors or meter assembly coupler is faulty and must be repaired.

http://manuals.magnamaniac.com

EAS00800

4. The neutral indicator light fails to come on.

1. Neutral indicator light LED

- Check the LED of the neutral indicator light.
  Refer to “CHECKING THE BULBS AND BULB SOCKETS”.
- Is the neutral indicator light LED OK?

YES ⇩ NO ⇩

Replace the meter assembly.

2. Neutral switch

- Check the neutral switch for continuity.
  Refer to “CHECKING THE SWITCHES”.
- Is the neutral switch OK?

YES ⇩ NO ⇩

Replace the neutral switch.

EAS00753

3. Relay unit (diode)

- Disconnect the relay unit from the wire harness.
- Connect the pocket tester (Ω × 1) to the relay unit terminals as shown.
- Check the diode for continuity.

Positive tester probe → sky blue ① Negative tester probe → light green ②	**Continuity**
Positive tester probe → light green ② Negative tester probe → sky blue ①	**No continuity**

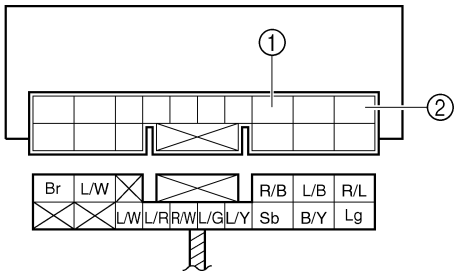

NOTE:
When you switch the positive and negative tester probes, the readings in the above chart will be reversed.

- Are the tester readings correct?

YES ⇩ NO ⇩

Replace the relay unit.

http://manuals.magnamaniac.com

4. Voltage

- Connect the pocket tester (DC 20 V) to the meter assembly coupler (wire harness end) as shown.

Positive tester probe → light green ①
Negative tester probe → ground

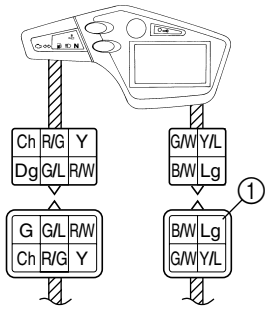

- Set the main switch to "ON".
- Shift the transmission to neutral.
- Measure the voltage (DC 12 V) of light green ① and ground at the meter assembly coupler.
- Is the voltage within specification?

YES

This circuit is OK.

NO

The wiring circuit from the main switch to the meter assembly couplers is faulty and must be repaired.

EAS00803

5. The fuel level warning light fails to come on.

1. Fuel level warning light LED

- Check the LED of the fuel level warning light.
  Refer to "CHECKING THE BULBS AND BULB SOCKETS".
- Is the fuel level warning light LED OK?

YES

NO

Replace the meter assembly.

2. Fuel sender (thermistor)

- Disconnect the fuel sender coupler from the fuel pump.
- Connect the pocket tester (kΩ × 1) to the fuel sender as shown.

Positive tester probe → green/white ①
Negative tester probe → black ②

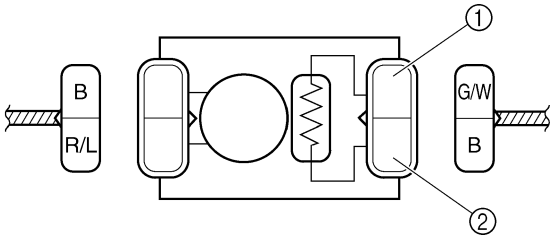

- Check the fuel sender for continuity.
- Is the fuel sender OK?

YES

NO

Replace the fuel pump assembly.

http://manuals.magnamaniac.com

3. Voltage

- Connect the pocket tester (DC 20 V) to the meter assembly coupler (wire harness end) as shown.

Positive tester probe → green/white ①
Negative tester probe → black/white ②

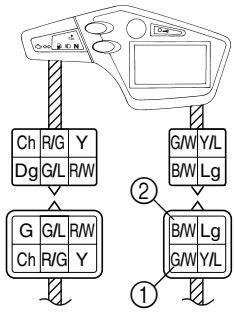

- Set the main switch to "ON".
- Measure the voltage (DC 12 V) of green/white ① and black/white ② at the meter assembly coupler.
- Is the voltage within specification?

YES → This circuit is OK.

NO → The wiring circuit from the main switch to the meter assembly coupler is faulty and must be repaired.

6. The speedometer fails to come on.

1. Voltage

- Connect the pocket tester (DC 20 V) to the meter assembly coupler (wire harness end) as shown.

Positive tester probe → yellow/blue ①
Negative tester probe → black/white ②

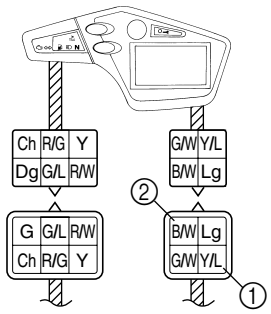

- Set the main switch to "ON".
- Elevate the rear wheel and slowly rotate it.
- Measure the voltage (DC 5 V) of yellow/blue ① at the meter assembly coupler (wire harness end).
- Is the voltage within specification?

YES → NO → Replace the meter assembly.

http://manuals.magnamaniac.com

2. Speed sensor

- Connect the pocket tester (DC 20 V) to the speed sensor coupler as shown.

Positive tester probe → pink ①
Negative tester probe → black/white ②

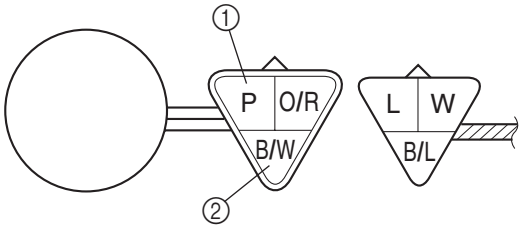

- Set the main switch to "ON".
- Elevate the rear wheel and slowly rotate it.
- Measure the voltage (DC 5 V) of pink and black/white. With each full rotation of the rear wheel, the voltage reading should cycle from 0.6 V to 4.8 V to 0.6 V to 4.8 V.
- Does the voltage reading cycle correctly?

YES → This circuit is OK.

NO → Replace the speed sensor.

7. The coolant temperature warning light fails to come on.

1. Coolant temperature warning light LED

- Check the LED of the coolant temperature warning light.
  Refer to "CHECKING THE BULBS AND BULB SOCKETS".
- Is the coolant temperature warning light LED OK?

YES

NO → Replace the meter assembly.

2. Voltage

- Connect the pocket tester (DC 20 V) to the meter assembly coupler (wire harness end) as shown.

Positive tester probe → yellow/blue ①
Negative tester probe → black/white ②

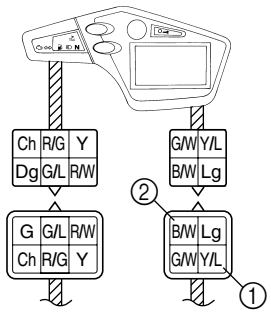

- Set the main switch to "ON".
- Measure the voltage (DC 5 V) of yellow/blue ① on the meter assembly coupler (wire harness end).
- Is the voltage within specification?

YES

NO → The wiring circuit from the ECU to the meter assembly coupler is faulty and must be repaired.

http://manuals.magnamaniac.com

EAS00812

3. Coolant temperature sensor

- Remove the coolant temperature sensor from the engine.
- Connect the pocket tester (Ω × 10) to the coolant temperature sensor ① as shown.
- Immerse the coolant temperature sensor in a container filled with coolant ②.

NOTE:
Make sure that the coolant temperature sensor terminals do not get wet.

- Place a thermometer ③ in the coolant.
- Slowly heat the coolant, and then let it cool to the specified temperature indicated in the table.
- Check the coolant temperature sensor for continuity at the temperatures indicated in the table.

Test step	Coolant temperature	Resistance
1	20 °C (68 °F)	2.32 ~ 2.59 kΩ
2	80 °C (176 °F)	0.310 ~ 0.326 kΩ
3	110 °C (230 °F)	0.140 ~ 0.145 kΩ

⚠ WARNING

- **Handle the coolant temperature sensor with special care.**
- **Never subject the coolant temperature sensor to strong shocks. If the coolant temperature sensor is dropped, replace it.**

Coolant temperature sensor
18 Nm (1.8 m · kg, 13 ft · lb)

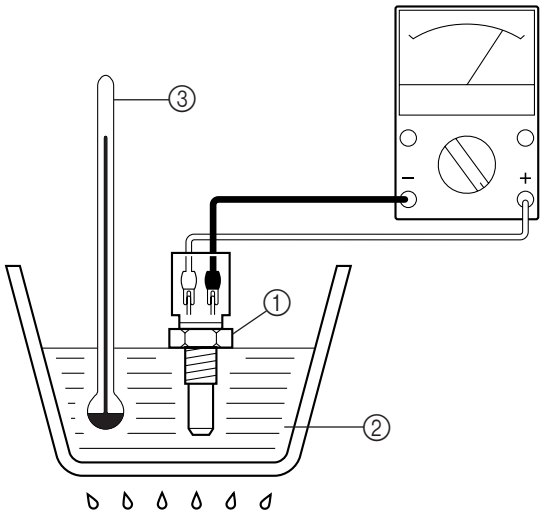

- Does the coolant temperature sensor operate properly?

YES ↓

NO →

Replace the coolant temperature sensor.

EAS00813

4. Wiring

- Check the entire cooling system's wiring. Refer to "CIRCUIT DIAGRAM".
- Is the cooling system's wiring properly connected and without defects?

YES ↓

NO →

Replace the ECU.

Properly connect or repair the cooling system's wiring.

http://manuals.magnamaniac.com

EAS00807

COOLING SYSTEM

CIRCUIT DIAGRAM

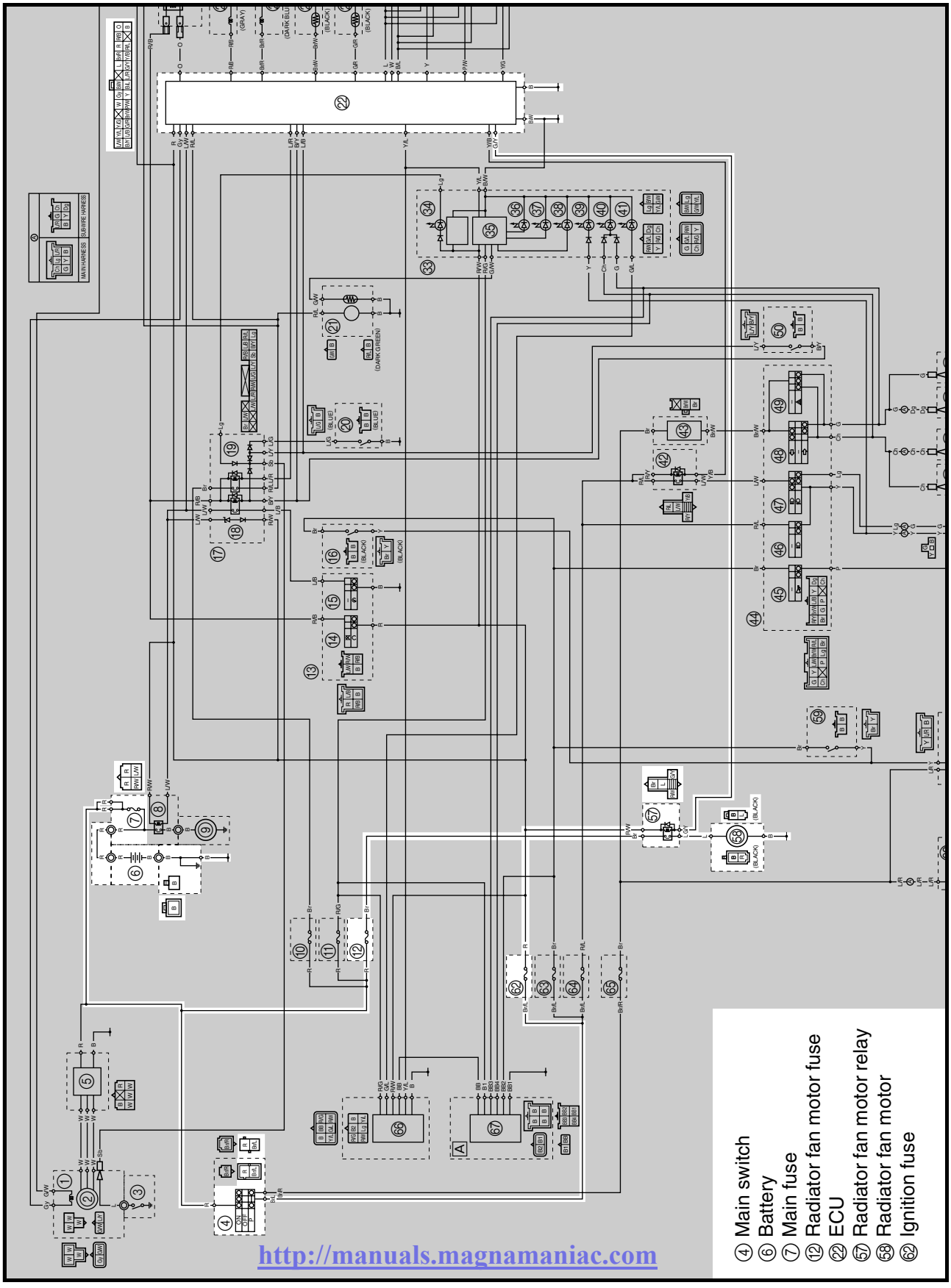

http://manuals.magnamaniac.com

EAS00808
TROUBLESHOOTING

The radiator fan motor fails to turn.

Check:
1. main, radiator fan motor, and ignition fuses
2. battery
3. main switch
4. radiator fan motor
5. radiator fan motor relay
6. wiring connections
   (the entire cooling system)

NOTE:
- Before troubleshooting, remove the following part(s):

1. seat
2. battery cover
3. side panels (left and right)
4. fuel tank side covers (left and right)
5. fuel tank

- Troubleshoot with the following special tool(s).

Pocket tester
90890-03112

EAS00738

1. Main, radiator fan motor, and ignition fuses

- Check the main, radiator fan motor, and ignition fuses for continuity.
  Refer to “CHECKING THE FUSES” in chapter 3.
- Are the main, radiator fan motor, and ignition fuses OK?

YES

NO → Replace the fuse(s).

EAS00739

2. Battery

- Check the condition of the battery.
  Refer to “CHECKING AND CHARGING THE BATTERY” in chapter 3.

Minimum open-circuit voltage
12.8 V or more at 20 °C (68 °F)

- Is the battery OK?

YES

NO →
- Clean the battery terminals.
- Recharge or replace the battery.

EAS00749

3. Main switch

- Check the main switch for continuity.
  Refer to “CHECKING THE SWITCHES”.
- Is the main switch OK?

YES

NO → Replace the main switch/immobilizer unit.

http://manuals.magnamaniac.com

EAS00809

4. Radiator fan motor

- Disconnect the radiator fan motor coupler from the wire harness.
- Connect the battery (DC 12 V) as shown.

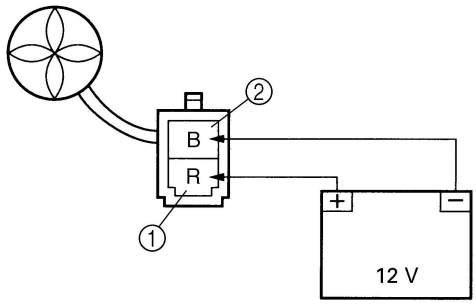

Positive battery lead → red ①
Negative battery lead → black ②

- Does the radiator fan motor turn?

YES

NO → The radiator fan motor is faulty and must be replaced.

5. Radiator fan motor relay

- Disconnect the radiator fan motor relay from the wire harness.
- Connect the pocket tester (Ω × 1) and battery (DC 12 V) to the radiator fan motor terminal as shown.
- Check the radiator fan motor for continuity.

Battery positive terminal → red/white ①
Battery negative terminal → green/yellow ②

Positive tester probe → brown ③
Negative tester probe → blue ④

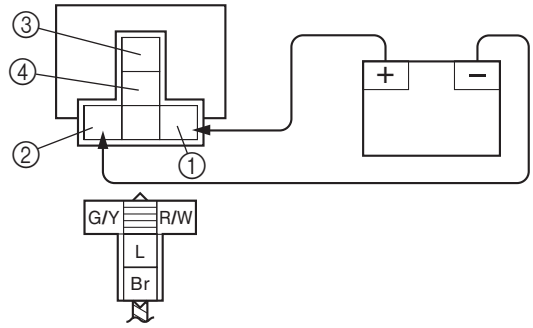

- Does the radiator fan motor relay have continuity between brown and blue?

YES

NO → Replace the radiator fan motor relay.

EAS00813

6. Wiring

- Check the entire cooling system's wiring. Refer to "CIRCUIT DIAGRAM".
- Is the cooling system's wiring properly connected and without defects?

YES → Replace the ECU.

NO → Properly connect or repair the cooling system's wiring.

http://manuals.magnamaniac.com

EB805000

IMMOBILIZER SYSTEM

CIRCUIT DIAGRAM

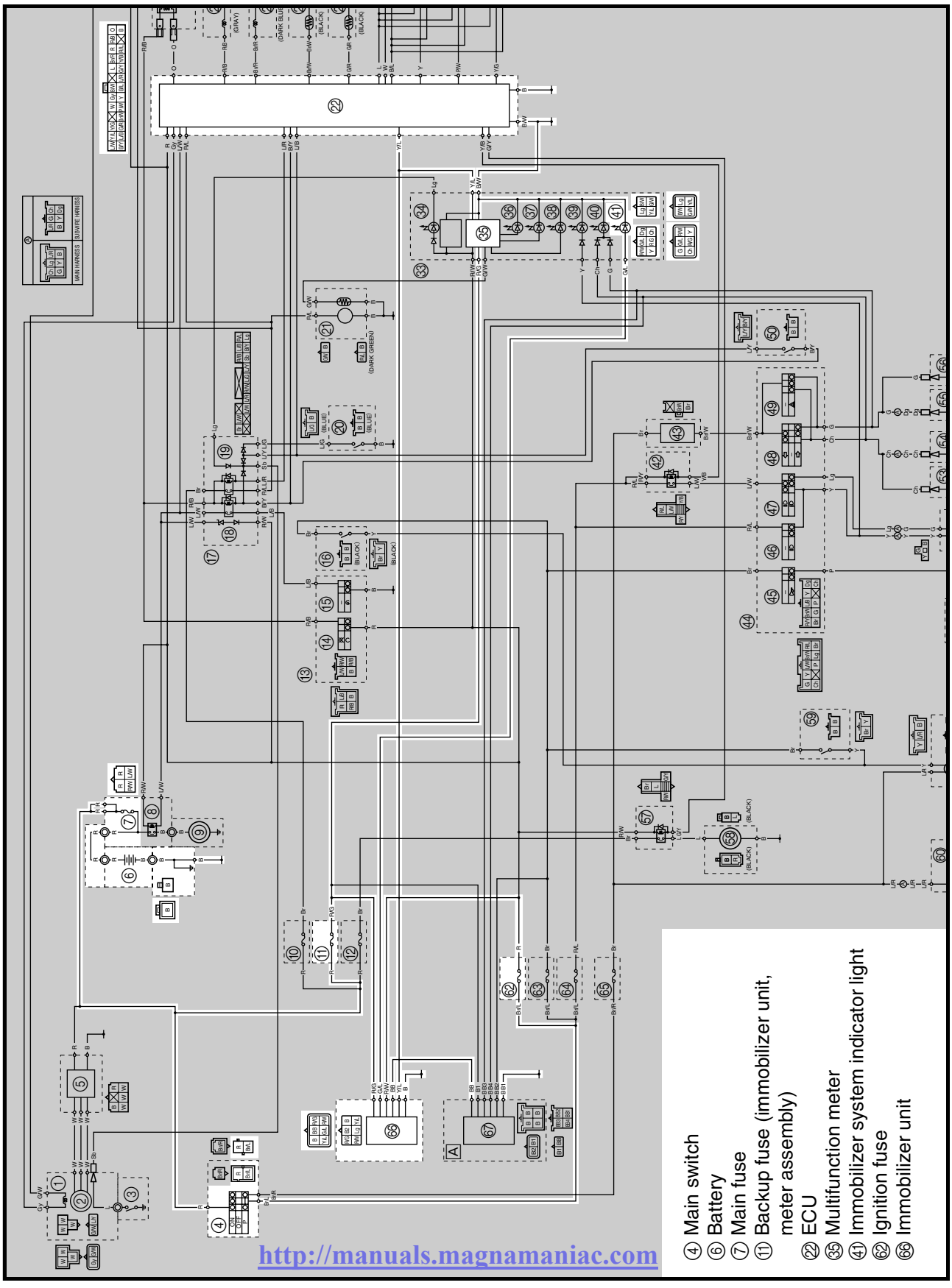

http://manuals.magnamaniac.com

GENERAL INFORMATION

This motorcycle is equipped with an immobilizer system to help prevent theft by registering codes in standard keys. This system consists of the following:

- a code re-registering key (with a red bow)
- two standard keys (with a black bow) that can be re-registered with new codes
- a transponder (which is installed in each key bow)
- an immobilizer unit
- an ECU
- an immobilizer system indicator light

The key with the red bow is used to register codes in each standard key. Do not use the key with the red bow for driving. It should only be used for registering new codes in the standard keys. The immobilizer system cannot be operated with a new key until a code is registered in the key. If you lose the code re-registering key, the ECU, main switch, and immobilizer unit must be replaced. Therefore, always use a standard key for driving.

NOTE:

Each standard key is registered during production, therefore, registering the keys at purchase is not necessary.

CAUTION:

- **DO NOT LOSE THE CODE RE-REGISTERING KEY! If the code re-registering key is lost, registering new codes in the standard keys is impossible. The standard keys can still be used to start the motorcycle, however, if code re-registering is required (i.e., if a new standard key is made or all keys are lost) the entire immobilizer system must be replaced. Therefore, it is highly recommended to use either standard key and keep the code re-registering key in a safe place.**
- **Do not submerse the keys in water.**
- **Do not expose the keys to excessively high temperatures.**
- **Do not place the keys close to magnets (this includes, but not limited to, products such as speakers, etc.).**
- **Do not place heavy items on the keys.**
- **Do not grind the keys or alter their shape.**
- **Do not disassemble the key bows.**
- **Do not put two keys of any immobilizer system on the same key ring.**
- **Keep the standard keys as well as other immobilizer system keys away from the code re-registering key.**
- **Keep other immobilizer system keys away from the main switch as they may cause signal interference.**

http://manuals.magnamaniac.com

KEY CODE REGISTRATION

The replacement of parts or code registration of a code re-registering key or standard key may be required in the following conditions.

NOTE:

Each standard key is registered during production, therefore, registering the keys at purchase is not necessary.

Parts to replace: replacing a lost key or system malfunction

	Part to replace					Required key registration
	Main switch	Immobilizer unit	Standard key	ECU	Accessory lock*2 and key	
Standard key is lost			○			New standard key
All keys have been lost (including code re-registering key)	○	○ *1	○	○	○	Code re-registering key and standard keys
ECU is defective				○		Code re-registering key
Immobilizer unit is defective		○				Code re-registering key and standard keys
Main switch is defective	○	○ *1		○	○	Code re-registering key and standard keys
Accessory lock*2 is defective					○	Not required

*1 Replace as a set with the main switch.

*2 Accessory locks include the seat lock, fuel tank cap, and helmet holder.

Code re-registering key registration:

When the immobilizer unit or ECU is replaced, the code re-registering key must be re-registered.

To register a code re-registering key:

1. Set the main switch to “ON” with the code re-registering key.

NOTE:

Check that the immobilizer system indicator light comes on for 1 second, then goes off. When the indicator light goes off, the code re-registering key has been registered.

2. Check that the engine can be started.
3. Register the standard keys. Refer to “Standard key registration:”.

http://manuals.magnamaniac.com

Standard key registration:
A standard key should be registered or the other standard key should be re-registered when a registered standard key has been lost. The standard keys must be re-registered when the immobilizer unit or ECU has been replaced and the code re-registering key has been re-registered.

NOTE:
Do not start the engine with a standard key that has not been registered.
If the main switch is set to "ON" with a standard key that has not been registered, the immobilizer system indicator light flashes to indicate malfunction code 52. (Refer to "SELF-DIAGNOSIS MALFUNCTION CODES".)

1. Check that the immobilizer system indicator light flashes to indicate the standby mode. To activate the standby mode, set the main switch to "OFF". The standby mode will be activated after 30 seconds. The indicator light stops flashing after 24 hours and the standby mode ends.

Standby mode	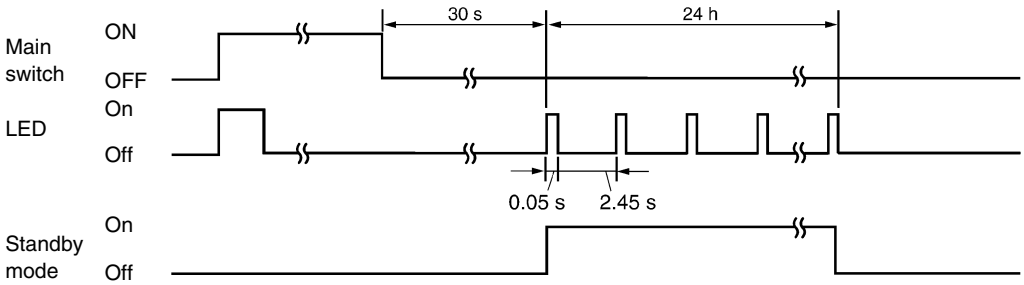

2. Using the code re-registering key, set the main switch to "ON", then to "OFF", and then remove the key within 5 seconds.
3. Insert the standard key to be registered into the main switch, and then set the main switch to "ON" within 5 seconds to activate the key registration mode.

NOTE:
If the two standard key codes are stored in memory, they will be erased when the key registration mode is activated. When the key registration mode is activated, the immobilizer system indicator light flashes rapidly (i.e., off for 0.5 second and on for 0.5 second).

4. While the indicator light is flashing, set the main switch to "OFF", remove the key, and then insert the second standard key to be registered into the main switch within 5 seconds.

NOTE:
If the immobilizer system indicator light stops flashing 5 seconds after the first standard key is registered, the registration mode is complete. If this occurs, the second standard key cannot be registered, therefore, repeat steps 2 to 4 to register both standard keys.

5. Set the main switch to "ON".

NOTE:
When the indicator light goes off, registration is complete.

http://manuals.magnamaniac.com

6. Check that the engine can be started with the two registered standard keys.

Standard key registration	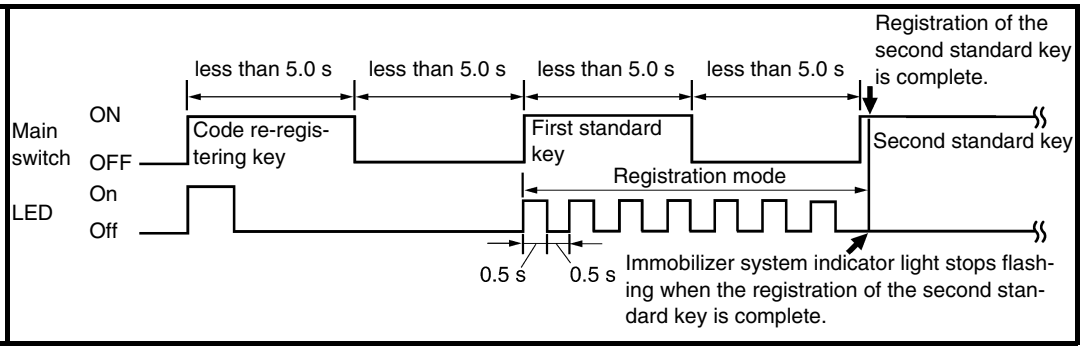

Voiding a standard key code:

If a registered standard key has been lost and you want to disable its use, register a new standard key or re-register the other standard key. For registration of a standard key, refer to “Standard key registration:”.

Standard key registration erases the stored standard key codes from memory, therefore, the lost standard key is disabled.

Standard key code voiding method	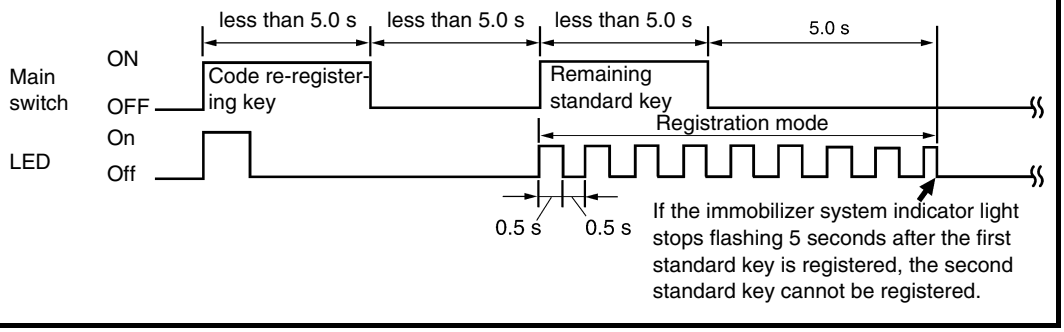

http://manuals.magnamaniac.com

SELF-DIAGNOSIS MALFUNCTION CODES

When a system malfunction occurs, the malfunction code number is displayed on the multifunction display and is indicated by the immobilizer system indicator light flash patterns.

Malfunction code	Part	Symptom	Cause	Action
51	Immobilizer unit	Code cannot be transmitted between the key and immobilizer unit.	1) Objects that interrupt radio waves exist around the keys or antennas. 2) Immobilizer unit malfunction 3) Key malfunction	1) Keep magnets, metal, and other immobilizer system keys away from the keys and antennas. 2) Replace the main switch/immobilizer unit. 3) Replace the key.
52	Immobilizer unit	Codes transmitted between the key and immobilizer unit do not match.	1) Signal received from other transponder (failed to recognize code after ten consecutive attempts). 2) Signal received from unregistered standard key.	1) Place the immobilizer unit at least 50 mm away from the transponder of other motorcycles. 2) Register the standard key.
53	Immobilizer unit	Code cannot be transmitted between the ECU and immobilizer unit.	1) Noise interference or disconnected lead/cable. 2) Obstruction due to radio wave noise. 3) Disconnected communication harness. 4) Immobilizer unit malfunction 5) ECU malfunction	1) Check the wire harness and connector. 2) Replace the main switch/immobilizer unit. 3) Replace the ECU.
54	Immobilizer unit	Codes transmitted between ECU and immobilizer unit do not match.	1) Noise interference or disconnected lead/cable. 2) Obstruction due to radio wave noise. 3) Immobilizer unit malfunction 4) ECU malfunction (When used parts from other motorcycles are used, the code re-registering key is not registered in the ECU.)	1) Register the code re-registering key. 2) Replace the main switch/immobilizer unit. 3) Replace the ECU.
55	Immobilizer unit	Key code registration malfunction	Same standard key was attempted to be registered two consecutive times.	Register a new standard key.
56	ECU	Unidentified code is received.	Noise interference or disconnected lead/cable.	1) Check the wire harness and connector. 2) Replace the main switch/immobilizer unit. 3) Replace the ECU.

Immobilizer system indicator light malfunction code indication

Digits of 10: on for 1 second and off for 1.5 seconds.
Digits of 1: on for 0.5 second and off for 0.5 second.

Example: multifunction code 52

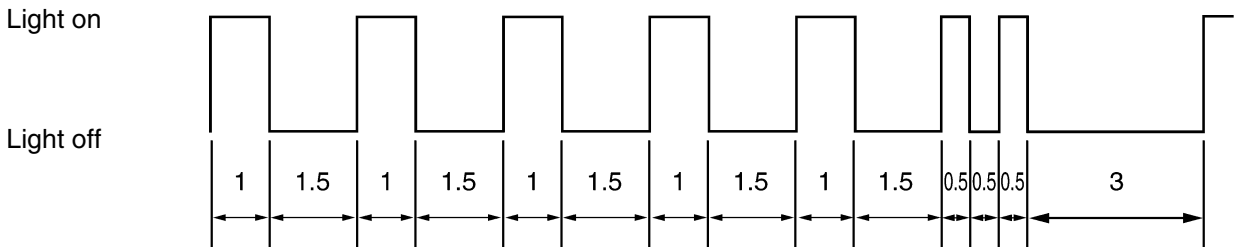

http://manuals.magnamaniac.com

EAS00781
TROUBLESHOOTING

The immobilizer system fails to operate. (The immobilizer system indicator light starts to flash in the self-diagnosis code sequence.)

Check:
1. main, ignition, and backup fuses
2. battery
3. main switch
4. wiring
   (of the entire immobilizer system)

NOTE:
- Before troubleshooting, remove the following part(s).

1. seat
2. battery cover
3. side panels (left and right)
4. fuel tank side covers (left and right)
5. fuel tank

- Troubleshoot with the following special tool(s).

Pocket tester
90890-03112

EAS00738

1. Main, ignition, and backup fuses

- Check the main, ignition, and backup fuses for continuity.
  Refer to "CHECKING THE FUSES" in chapter 3.
- Are the main, ignition, and backup fuses OK?

YES → NO: Replace the fuse(s).

EAS00739

2. Battery

- Check the condition of the battery.
  Refer to "CHECKING AND CHARGING THE BATTERY" in chapter 3.

Minimum open-circuit voltage
12.8 V or more at 20 °C

- Is the battery OK?

YES → NO:
- Clean the battery terminals.
- Recharge or replace the battery.

EAS00749

3. Main switch

- Check the main switch for continuity.
  Refer to "CHECKING THE SWITCHES".
- Is the main switch OK?

YES → NO: Replace the main switch/immobilizer unit.

EAS00787

4. Wiring

- Check the entire immobilizer system's wiring.
  Refer to "CIRCUIT DIAGRAM".
- Is the immobilizer system's wiring properly connected and without defects?

YES: Check the condition of each of the immobilizer system's circuits.
Refer to "CHECKING THE IMMOBILIZER SYSTEM".

NO: Properly connect or repair the immobilizer system's wiring.

http://manuals.magnamaniac.com

CHECKING THE IMMOBILIZER SYSTEM

1. Immobilizer system indicator light does not go on when the main switch is set to "ON".

1. Immobilizer system indicator light LED

- Check the LED of the immobilizer system indicator light.
  Refer to "CHECKING THE BULBS AND BULB SOCKETS".
- Is the immobilizer system indicator light LED OK?

YES

NO → Replace the meter assembly.

2. Voltage

- Connect the pocket tester (DC 20 V) to the meter assembly couplers as shown.

Positive tester probe → green/blue ①
Negative tester probe → black/white ②

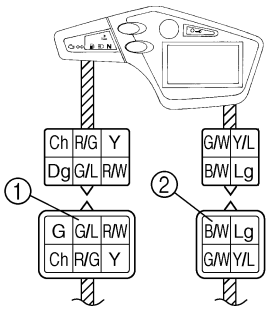

- Set the main switch to "ON".
- Measure the voltage (2.6 V) between green/blue and black/white on the meter assembly couplers.
- Is the voltage within specification?

YES

NO → Replace the meter assembly.

3. Voltage

- Connect the pocket tester (DC 20 V) to the immobilizer unit coupler as shown.

Positive tester probe → red/green ①
Negative tester probe → black ②

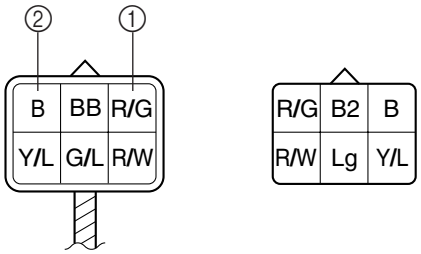

- Set the main switch to "ON".
- Measure the voltage (12 V) between red/green and black on the immobilizer unit coupler.
- Is the voltage within specification?

YES

NO → The wiring circuit from the battery to the immobilizer unit is faulty and must be repaired.

http://manuals.magnamaniac.com

4. Voltage

- Connect the pocket tester (DC 20 V) to the immobilizer unit coupler as shown.

Positive tester probe → red/white ①
Negative tester probe → black ②

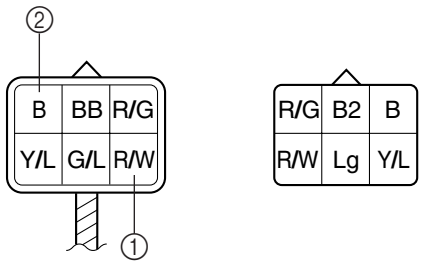

- Set the main switch to "ON".
- Measure the voltage (12 V) between red/white and black on the immobilizer unit coupler.
- Is the voltage within specification?

YES

The wiring circuit from the main switch to the immobilizer unit is faulty and must be repaired.

NO

5. Voltage

- Connect the pocket tester (DC 20 V) to the immobilizer unit coupler as shown.

Positive tester probe → green/blue ①
Negative tester probe → black ②

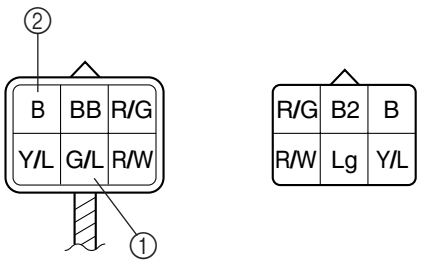

- Set the main switch to "ON".
- Measure the voltage (2.6 V) between green/blue and black on the immobilizer unit coupler.
- Is the voltage within specification?

YES

The wiring circuit from the immobilizer unit to the meter assembly is faulty and must be repaired.

NO

Replace the immobilizer unit.

http://manuals.magnamaniac.com

2. The multifunction display is not indicated.

1. Voltage

- Connect the pocket tester (DC 20 V) to the meter assembly couplers as shown.

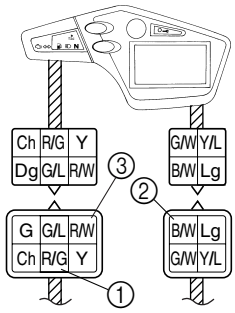

Positive tester probe →
red/green ① and red/white ③
Negative tester probe → black/white ②

- Turn the main switch to "ON".
- Measure the voltage (DC 12 V) meter assembly couplers (wire harness end).
- Is the voltage within specification?

YES → Replace the meter assembly.

NO → The wiring circuit from the main switch to the meter assembly couplers is faulty and must be repaired.

http://manuals.magnamaniac.com

3. When the main switch is set to “ON”, the immobilizer system indicator light flashes after 1 second.
   - Check if metal or other immobilizer system keys exists near the immobilizer unit. If found, remove the metal or keys, and then check the condition again.

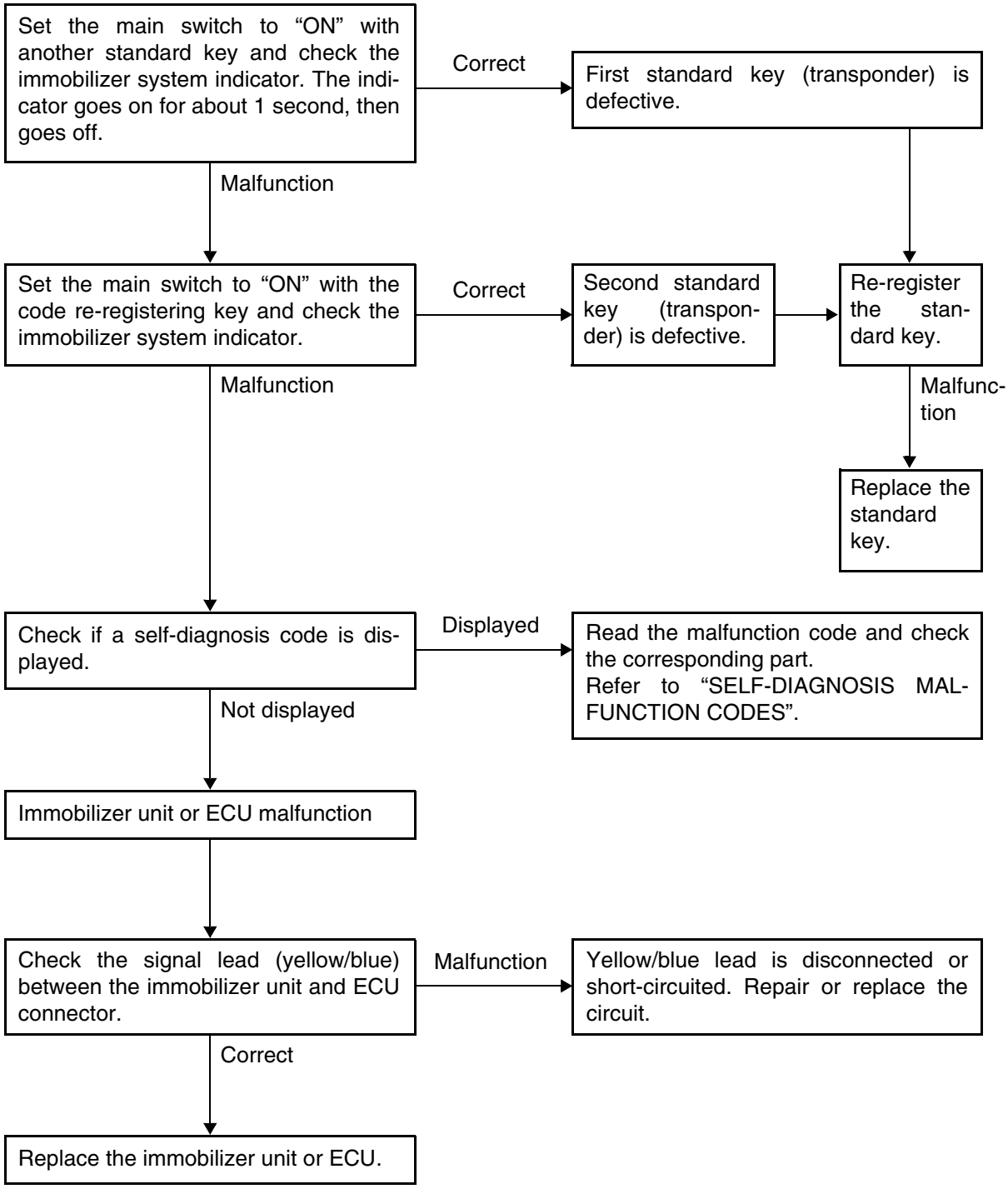

http://manuals.magnamaniac.com

EAS00834
SELF-DIAGNOSIS

The XT660R/XT660X features a self-diagnosing system for the following circuit:

- Fuel sender (thermistor)

If the circuit is defective, the condition code will be displayed on the fuel level warning light when the main switch is set to “ON” (irrespective of whether the engine is running or not).

Circuit	Defect(-s)	System response	Condition code
Fuel pump thermistor	• Open circuit • Short circuit	• The fuel warning light indicate the condition code.	Refer to *1

*1 Condition code

Fuel level warning light

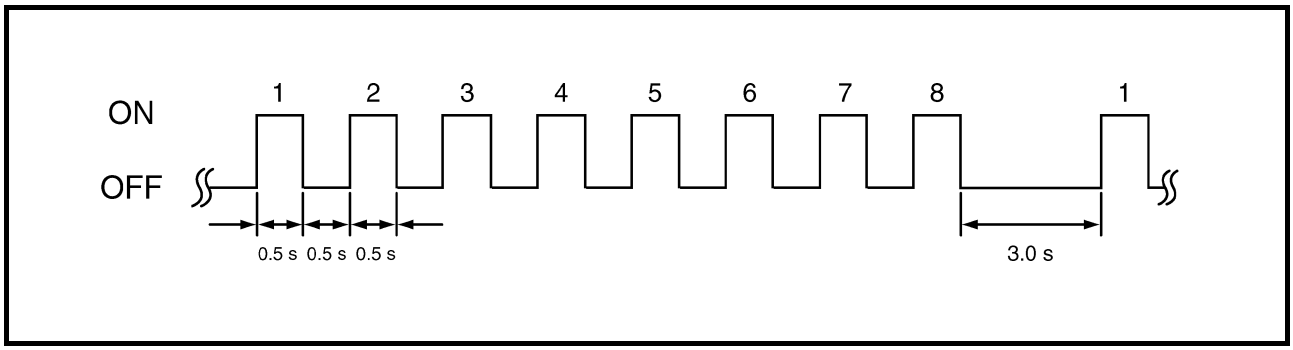

http://manuals.magnamaniac.com

EAS00835
TROUBLESHOOTING

The fuel level warning light starts to indicates the self-diagnosis sequence.

Check:
1. fuel sender (thermistor)

NOTE:
- Before troubleshooting, remove the following part(s):
1. seat
2. side panels (left and right)
3. fuel tank side covers (left and right)
4. fuel tank
- Troubleshoot with the following special tool(s).

Pocket tester
90890-03112

EAS00838
1. Fuel sender (thermistor)
CIRCUIT DIAGRAM

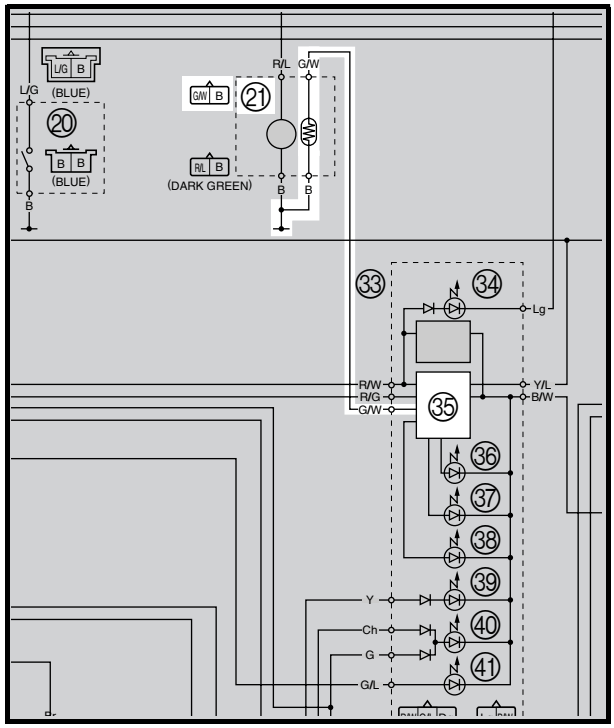

㉑ Fuel pump
㉟ Multifunction meter

EAS00841

1. Fuel level warning light LED
- Check the LED of the fuel level warning light.
  Refer to “CHECKING THE BULBS AND BULB SOCKETS”.
- Is the fuel level warning light LED OK?

YES

NO → Replace the meter assembly.

EAS00843

2. Wire harness
- Check the wire harness for continuity.
  Refer to “CIRCUIT DIAGRAM”.
- Is the wire harness OK?

YES

NO → Repair or replace the wire harness.

http://manuals.magnamaniac.com

EAS00842

3. Fuel sender (thermistor)

- Disconnect the fuel sender coupler from the wire harness.
- Connect the pocket tester (kΩ × 1) to the fuel sender as shown.

Positive tester probe → green/white ①
Negative tester probe → black ②

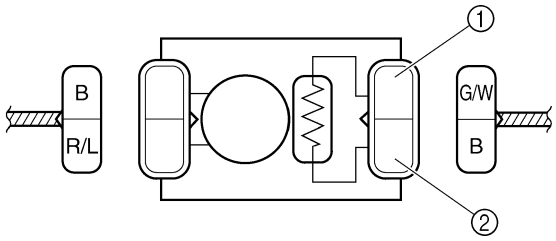

- Check the fuel sender for continuity.
- Is the fuel sender OK?

YES → Replace the meter assembly.

NO → Replace the fuel pump assembly.

http://manuals.magnamaniac.com

http://manuals.magnamaniac.com

TRBL SHTG

9

http://manuals.imghamaniac.com

CHAPTER 9
TROUBLESHOOTING

STARTING FAILURES 9-1
ENGINE 9-1
FUEL SYSTEM 9-1
ELECTRICAL SYSTEMS 9-2

INCORRECT ENGINE IDLING SPEED 9-2
ENGINE 9-2
FUEL SYSTEM 9-2
ELECTRICAL SYSTEMS 9-2

POOR MEDIUM-AND-HIGH-SPEED PERFORMANCE 9-3
ENGINE 9-3
FUEL SYSTEM 9-3

FAULTY GEAR SHIFTING 9-3
SHIFTING IS DIFFICULT 9-3
SHIFT PEDAL DOES NOT MOVE 9-3
JUMPS OUT OF GEAR 9-3

FAULTY CLUTCH 9-3
CLUTCH SLIPS 9-3
CLUTCH DRAGS 9-3

OVERHEATING 9-4
ENGINE 9-4
COOLING SYSTEM 9-4
FUEL SYSTEM 9-4
CHASSIS 9-4
ELECTRICAL SYSTEMS 9-4

OVERCOOLING 9-4
COOLING SYSTEM 9-4

POOR BRAKING PERFORMANCE 9-4

FAULTY FRONT FORK LEGS 9-5
LEAKING OIL 9-5
MALFUNCTION 9-5

UNSTABLE HANDLING 9-5

http://manuals.magnamaniac.com

FAULTY LIGHTING OR SIGNALING SYSTEM.....9-6
HEADLIGHT DOES NOT COME ON.....9-6
HEADLIGHT BULB BURNT OUT.....9-6
TAIL/BRAKE LIGHT DOES NOT COME ON.....9-6
TAIL/BRAKE LIGHT BULB BURNT OUT.....9-6
TURN SIGNAL DOES NOT COME ON.....9-6
TURN SIGNAL FLASHES SLOWLY.....9-6
TURN SIGNAL REMAINS LIT.....9-6
TURN SIGNAL FLASHES QUICKLY.....9-6
HORN DOES NOT SOUND.....9-6

http://manuals.magnamaniac.com

EAS00844

TROUBLESHOOTING

NOTE:

The following guide for troubleshooting does not cover all the possible causes of trouble. It should be helpful, however, as a guide to basic troubleshooting. Refer to the relative procedure in this manual for checks, adjustments, and replacement of parts.

STARTING FAILURES

ENGINE

Cylinder and cylinder head

- Loose spark plug
- Loose cylinder head or cylinder
- Damaged cylinder head gasket
- Damaged cylinder gasket
- Worn or damaged cylinder
- Incorrect valve clearance
- Improperly sealed valve
- Incorrect valve-to-valve-seat contact
- Incorrect valve timing
- Faulty valve spring
- Seized valve

Piston and piston ring(s)

- Improperly installed piston ring
- Damaged, worn or fatigued piston ring
- Seized piston ring
- Seized or damaged piston

Air filter

- Improperly installed air filter
- Clogged air filter element

Crankcase and crankshaft

- Improperly assembled crankcase
- Seized crankshaft

FUEL SYSTEM

Fuel tank

- Empty fuel tank
- Clogged fuel tank drain hose
- Deteriorated or contaminated fuel

Fuel pump

- Faulty fuel pump
- Faulty relay unit

Throttle body

- Deteriorated or contaminated fuel
- Sucked-in air

http://manuals.magnamaniac.com

ELECTRICAL SYSTEMS

Battery
- Discharged battery
- Faulty battery

Fuse(s)
- Blown, damaged or incorrect fuse
- Improperly installed fuse

Spark plug
- Incorrect spark plug gap
- Incorrect spark plug heat range
- Fouled spark plug
- Worn or damaged electrode
- Worn or damaged insulator
- Faulty spark plug cap

Ignition coil
- Cracked or broken ignition coil body
- Broken or shorted primary or secondary coils
- Faulty spark plug lead

Ignition system
- Faulty ECU
- Faulty crankshaft position sensor
- Broken A.C. magneto rotor woodruff key

Switches and wiring
- Faulty main switch
- Faulty engine stop switch
- Broken or shorted wiring
- Faulty neutral switch
- Faulty start switch
- Faulty sidestand switch
- Faulty clutch switch
- Improperly grounded circuit
- Loose connections

Starting system
- Faulty starter motor
- Faulty starter relay
- Faulty starting circuit cut-off relay
- Faulty starter clutch

EAS00846
INCORRECT ENGINE IDLING SPEED

ENGINE

Cylinder and cylinder head
- Incorrect valve clearance
- Damaged valve train components

Air filter
- Clogged air filter element

FUEL SYSTEM

Throttle body
- Damaged or loose throttle body joint
- Improperly adjusted engine idling speed (throttle stop screw)
- Improper throttle cable free play
- Flooded throttle body
- Faulty air induction system

ELECTRICAL SYSTEMS

Battery
- Discharged battery
- Faulty battery

Spark plug
- Incorrect spark plug gap
- Incorrect spark plug heat range
- Fouled spark plug
- Worn or damaged electrode
- Worn or damaged insulator
- Faulty spark plug cap

Ignition coil
- Broken or shorted primary or secondary coils
- Faulty spark plug lead
- Cracked or broken ignition coil

Ignition system
- Faulty ECU
- Faulty crankshaft position sensor
- Broken A.C. magneto rotor woodruff key

http://manuals.magnamaniac.com

EAS00848
POOR MEDIUM-AND-HIGH-SPEED PERFORMANCE

Refer to “STARTING FAILURES”.

ENGINE

Air filter
- Clogged air filter element

FUEL SYSTEM

Fuel pump
- Faulty fuel pump

EAS00850
FAULTY GEAR SHIFTING

SHIFTING IS DIFFICULT

Refer to “CLUTCH DRAGS”.

SHIFT PEDAL DOES NOT MOVE

Shift shaft
- Improperly adjusted shift rod
- Bent shift shaft.

Shift drum and shift forks
- Foreign object in a shift drum groove
- Seized shift fork
- Bent shift fork guide bar

Transmission
- Seized transmission gear
- Foreign object between transmission gears
- Improperly assembled transmission

JUMPS OUT OF GEAR

Shift shaft
- Incorrect shift pedal position
- Improperly returned stopper lever

Shift forks
- Worn shift fork

Shift drum
- Incorrect axial play
- Worn shift drum groove

Transmission
- Worn gear dog

EAS00851
FAULTY CLUTCH

CLUTCH SLIPS

Clutch
- Improperly assembled clutch
- Improperly adjusted clutch cable
- Loose or fatigued clutch spring
- Worn friction plate
- Worn clutch plate

Engine oil
- Incorrect oil level
- Incorrect oil viscosity (low)
- Deteriorated oil

CLUTCH DRAGS

Clutch
- Unevenly tensioned clutch springs
- Warped pressure plate
- Bent clutch plate
- Swollen friction plate
- Bent clutch push rod
- Broken clutch boss
- Burnt primary driven gear bushing
- Match marks not aligned

Engine oil
- Incorrect oil level
- Incorrect oil viscosity (high)
- Deteriorated oil

http://manuals.magnamaniac.com

EAS00855
OVERHEATING

ENGINE
Clogged coolant passages
- Cylinder head and piston
- Heavy carbon buildup

Engine oil
- Incorrect oil level
- Incorrect oil viscosity
- Inferior oil quality

COOLING SYSTEM
Coolant
- Low coolant level

Radiator
- Damaged or leaking radiator
- Faulty radiator cap
- Bent or damaged radiator fin

Water pump
- Damaged or faulty water pump
- Thermostat
- Thermostat stays closed
- Damaged hose
- Improperly connected hose
- Damaged pipe
- Improperly connected pipe

EAS00856
OVERCOOLING

COOLING SYSTEM
Thermostat
- Thermostat stays open

EAS00857
POOR BRAKING PERFORMANCE

- Worn brake pad
- Worn brake disc
- Air in hydraulic brake system
- Leaking brake fluid
- Faulty brake caliper seal
- Loose union bolt
- Damaged brake hose
- Oil or grease on the brake disc
- Oil or grease on the brake pad
- Incorrect brake fluid level

FUEL SYSTEM
Throttle body
- Faulty throttle body
- Damaged or loose throttle body joint

Air filter
- Clogged air filter element

CHASSIS
Brake(s)
- Dragging brake

ELECTRICAL SYSTEMS
Spark plug
- Incorrect spark plug gap
- Incorrect spark plug heat range

Ignition system
- Faulty ECU

http://manuals.magnamaniac.com

EAS00861
FAULTY FRONT FORK LEGS

LEAKING OIL
- Bent, damaged or rusty inner tube
- Cracked or damaged outer tube
- Improperly installed oil seal
- Damaged oil seal lip
- Incorrect oil level (high)
- Loose damper rod assembly bolt
- Damaged damper rod assembly bolt copper washer
- Cracked or damaged cap bolt O-ring

MALFUNCTION
- Bent or damaged inner tube
- Bent or damaged outer tube
- Damaged fork spring
- Worn or damaged outer tube bushing
- Bent or damaged damper rod
- Incorrect oil viscosity
- Incorrect oil level

EAS00864
UNSTABLE HANDLING

Handlebar
- Bent or improperly installed handlebar

Steering head components
- Improperly installed upper bracket
- Improperly installed lower bracket (improperly tightened ring nut)
- Bent steering stem
- Damaged ball bearing or bearing race

Front fork leg(s)
- Uneven oil levels (both front fork legs)
- Unevenly tensioned fork spring (both front fork legs)
- Broken fork spring
- Bent or damaged inner tube
- Bent or damaged outer tube

Swingarm
- Worn bearing or bushing
- Bent or damaged swingarm

Rear shock absorber assembly
- Faulty rear shock absorber spring
- Leaking oil or gas

Tire(s)
- Uneven tire pressures (front and rear)
- Incorrect tire pressure
- Uneven tire wear

Wheel(s)
- Incorrect wheel balance
- Broken or loose spoke
- Damaged wheel bearing
- Bent or loose wheel axle
- Excessive wheel runout

Frame
- Bent frame
- Damaged steering head pipe
- Improperly installed bearing race

http://manuals.magnamaniac.com

EAS00866
FAULTY LIGHTING OR SIGNALING SYSTEM

HEADLIGHT DOES NOT COME ON
- Wrong headlight bulb
- Too many electrical accessories
- Hard charging
- Incorrect connection
- Improperly grounded circuit
- Poor contacts (main switch)
- Burnt-out headlight bulb
- Faulty headlight relay
- Faulty ECU

HEADLIGHT BULB BURNT OUT
- Wrong headlight bulb
- Faulty battery
- Faulty rectifier/regulator
- Improperly grounded circuit
- Faulty main switch
- Headlight bulb life expired

TAIL/BRAKE LIGHT DOES NOT COME ON
- Wrong tail/brake light bulb
- Too many electrical accessories
- Incorrect connection
- Burnt-out tail/brake light bulb

TAIL/BRAKE LIGHT BULB BURNT OUT
- Wrong tail/brake light bulb
- Faulty battery
- Incorrectly adjusted rear brake light switch
- Tail/brake light bulb life expired

TURN SIGNAL DOES NOT COME ON
- Faulty turn signal switch
- Faulty turn signal/hazard relay
- Burnt-out turn signal bulb
- Incorrect connection
- Damaged or faulty wire harness
- Improperly grounded circuit
- Faulty battery
- Blown, damaged or incorrect fuse

TURN SIGNAL FLASHES SLOWLY
- Faulty turn signal/hazard relay
- Faulty main switch
- Faulty turn signal switch
- Incorrect turn signal bulb

TURN SIGNAL REMAINS LIT
- Faulty turn signal/hazard relay
- Burnt-out turn signal bulb

TURN SIGNAL FLASHES QUICKLY
- Incorrect turn signal bulb
- Faulty turn signal/hazard relay
- Burnt-out turn signal bulb

HORN DOES NOT SOUND
- Improperly adjusted horn
- Damaged or faulty horn
- Faulty main switch
- Faulty horn switch
- Faulty battery
- Blown, damaged or incorrect fuse
- Faulty wire harness

http://manuals.magnamaniac.com

XT660R(S)/XT660X(S) 2004 WIRING DIAGRAM

① Crankshaft position sensor
② A.C. magneto
③ Neutral switch
④ Main switch
⑤ Rectifier/regulator
⑥ Battery
⑦ Main fuse
⑧ Starter relay
⑨ Starter motor
⑩ Fuel injection system fuse
⑪ Backup fuse (immobilizer unit, meter assembly)
⑫ Radiator fan motor fuse
⑬ Right handlebar switch
⑭ Engine stop switch
⑮ Start switch
⑯ Front brake light switch
⑰ Relay unit
⑱ Starting circuit cut-off relay
⑲ Fuel injection system relay
⑳ Sidestand switch
㉑ Fuel pump
㉒ ECU
㉓ Ignition coil
㉔ Spark plug
㉕ Fuel injector
㉖ Air induction system solenoid
㉗ Intake air temperature sensor
㉘ Coolant temperature sensor
㉙ Speed sensor
㉚ Throttle position sensor
㉛ Intake air pressure sensor
㉜ Lean angle cut-off switch
㉝ Meter assembly
㉞ Neutral indicator light
㉟ Multifunction meter
㊱ Coolant temperature warning light
㊲ Engine trouble warning light
㊳ Fuel level warning light
㊴ High beam indicator light
㊵ Turn signal indicator light
㊶ Immobilizer system indicator light
㊷ Headlight relay
㊸ Turn signal/hazard relay
㊹ Left handlebar switch
㊺ Horn switch
㊻ Pass switch
㊼ Dimmer switch
㊽ Turn signal switch
㊾ Hazard switch
㊿ Clutch switch
(51) Horn
(52) Headlight
(53) Rear turn signal light (left)
(54) Front turn signal light (left)
(55) Front turn signal light (right)
(56) Rear turn signal light (right)
(57) Radiator fan motor relay
(58) Radiator fan motor
(59) Rear brake light switch
(60) Auxiliary light
(61) Tail/brake light
(62) Ignition fuse
(63) Signaling system fuse
(64) Headlight fuse
(65) Parking lighting fuse
(66) Immobilizer unit
(67) Anti-theft alarm (optional)

[A] Optional

COLOR CODE

B ..... Black
Br ..... Brown
Ch ..... Chocolate
Dg ..... Dark green
G ..... Green
Gy ..... Gray
L ..... Blue
Lg ..... Light green
O ..... Orange
P ..... Pink
R ..... Red
Sb ..... Sky blue
W ..... White
Y ..... Yellow
B/L ..... Black/Blue
B/W ..... Black/White
B/Y ..... Black/Yellow
Br/L ..... Brown/Blue
Br/R ..... Brown/Red
Br/W ..... Brown/White
G/L ..... Green/Blue
G/R ..... Green/Red
G/W ..... Green/White
G/Y ..... Green/Yellow
L/B ..... Blue/Black
L/G ..... Blue/Green
L/R ..... Blue/Red
L/W ..... Blue/White
L/Y ..... Blue/Yellow
O/R ..... Orange/Red
P/W ..... Pink/White
R/B ..... Red/Black
R/G ..... Red/Green
R/L ..... Red/Blue
R/W ..... Red/White
R/Y ..... Red/Yellow
Y/B ..... Yellow/Black
Y/G ..... Yellow/Green
Y/L ..... Yellow/Blue

http://manuals.magnamaniac.com

http://manuals.magnamaniac.com

http://manuals.magnamaniac.com

MBK Industrie
Z.I de Rouvroy
02100 SAINT QUENTIN

Société Anonyme
au capital de 40 386 000 €
Téléphone : 33.(0)3.23.51.44.44
R.C St-Quentin B 329 035 422
Fax : 33.(0)3.23.51.45.02

XT660R(S)/XT660X(S) 2004 WIRING DIAGRAM

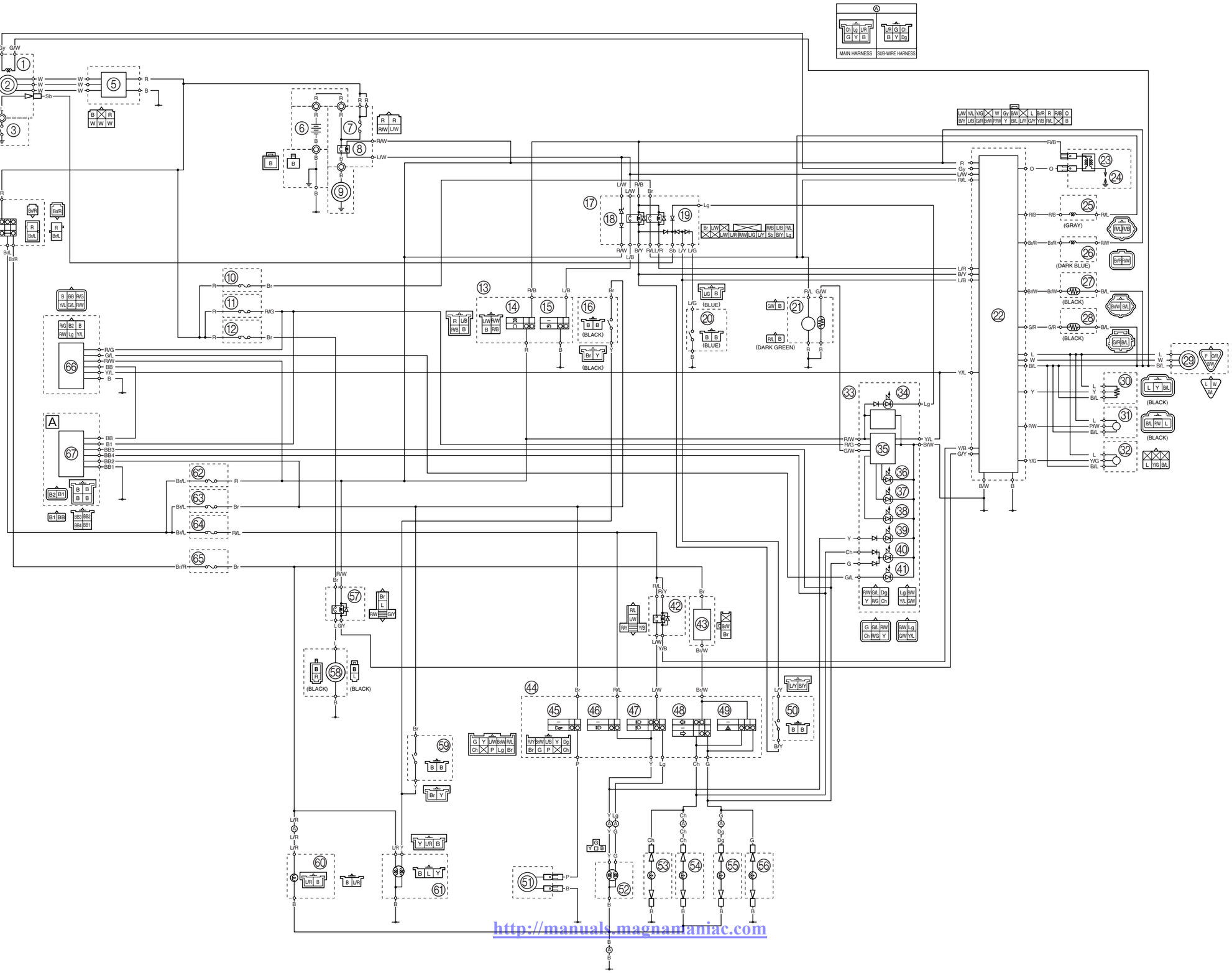

http://manuals.magnamaniac.com